# REPUBLIC OF KENYA

## KENYA RURAL ROADS AUTHORITY
## LAMU REGION

# TENDER DOCUMENT
# FOR PROCUREMENT OF ROAD WORKS

**Road Name : SIYU -SHANGA ISHAKANI ROAD**
**Road No : UNCL 10**
**Contract No : KERRA/011/LMU/39/012/2020-2021**

## MINOR ROAD WORKS CONTRACT

- ⇒ **Form of bid**
- ⇒ **Appendix to form of bid**
- ⇒ **Instructions to Tenderers**
- ⇒ **Conditions of Contract**
- ⇒ **Standard Forms**
- ⇒ **Specifications**
- ⇒ **Drawings**
- ⇒ **Bills of quantities**

**NOVEMBER, 2020**

| ENGINEER | EMPLOYER |
|---|---|
| **DIRECTOR, ROAD ASSET MANAGEMENT**<br>**KENYA RURAL ROADS AUTHORITY,**<br>**P.O. BOX 48151-00100,**<br>**NAIROBI.** | **THE DIRECTOR GENERAL,**<br>**KENYA RURAL ROADS AUTHORITY,**<br>**P.O. BOX 48151-00100,**<br>**NAIROBI** |

# STANDARD TENDER DOCUMENT

# FOR

# PROCUREMENT OF WORKS

## ➢ ROUTINE MAINTENANCE WORKS

## TABLE OF CONTENTS

**CONTENTS** **PAGE NO.**

**SECTION I: INVITATION FOR TENDERS ..... 3**
**SECTION II: INSTRUCTIONS TO TENDERERS ..... 4**
**SECTION III: QUALIFICATION CRITERIA ..... 10**
**SECTION IV: CONDITIONS OF CONTRACT ..... 13**
**SECTION V: APPENDIX TO FORM OF AGREEMENT ..... 18**
**SECTION VI: STANDARD FORMS ..... 21**
**SECTION VII: CONTRACTOR'S EVALUATION CHECKLIST ....** ERROR! BOOKMARK NOT DEFINED.
**SECTION VIII: SPECIFICATIONS, DRAWINGS AND BILLS OF QUANTITIES ..... 47**

## SECTION I: INVITATION FOR TENDERS

Tender reference No. **TENDER NUMBER: KERRA/011/LMU/39/012/2020-2021**

Tender Name: **SIYU -SHANGA ISHAKANI Road**

The (procuring entity) invites sealed tenders for the routine maintenance of **SIYU -SHANGA ISHAKANI Road.**

Interested eligible candidates may obtain further information and download the tendering documents from the KeRRA Website, www.kerra.go.ke or enquire at Deputy Director KeRRA Lamu Office, at LAMU Town) during normal working hours.

1.1 A complete set of tender documents may be obtained by interested candidates from the KeRRA website at www.kerra.go.ke for free from the date as shown on the advertisement.

1.2 Prices quoted should be net inclusive of all taxes, must be in Kenya shillings and shall remain valid for 120 days from the closing date of tender.

1.3 Completed tender documents are to be enclosed in plain sealed envelopes marked with Tender name and reference number and deposited in the Tender Box at Deputy Directors Office, in Lamu Town, or to be addressed to: Deputy Director - Roads
KeRRA LAMU,
P.O. BOX 102 – 80500
**LAMU**
so as to be received on or before (day, date and time as in the Tender Advert).

1.6 Tenders will be opened immediately thereafter in the presence of the Candidates or their representatives who choose to attend at (Deputy Directors Office, in Lamu Town)**.**

## SECTION II: INSTRUCTIONS TO TENDERERS
## TABLE OF CONTENTS


| CLAUSE | PAGE. |
|---|---|
| 1 GENERAL | 6 |
| 2. TENDER DOCUMENTS | 8 |
| 3. PREPARATION OF TENDERS | 8 |
| 4. SUBMISSION OF TENDERS | 9 |
| 5. TENDER OPENING AND EVALUATON | 10 |
| 6. AWARD OF CONTRACT | 12 |

# INSTRUCTIONS TO TENDERERS.

1. General

1.1 The Employer as defined in the Appendix to Conditions of Contract invites tenders for Works Contract as described in the tender documents. The successful Tenderer will be expected to complete the Works by the Intended Completion Date specified in the said Appendix.

1.2 Tenderers shall include the following information and documents with their tenders, unless otherwise stated:

i. **Certified** copy of Certificate of Incorporation/Registration
ii. **Certified** copy of Certificate of Registration with NCA as Contractor (Roads & Civil Works NCA 6, 7 & 8)
iii. **Valid** copy of PIN registration certificate
iv. Copy of **Valid** Tax compliance certificate (Will be verified on the KRA TCC Checker)
v. **Certified** copy of CR 12 (Issued within the last 12 months)
vi. **Certified** copies of National Identity Cards/Passports of Directors.
vii. **Certified** copy of **Valid** Single Business Permit
viii. **Certified** copy of **Valid** Certificate of Registration for Access to Government Procurement Opportunities (AGPO), from the National Treasury (For Disadvantaged groups, Women, Youth and Persons With Disability)
ix. Contractors bidding for **PWD** tenders should attach **certified** copies of their Identity Cards issued by the National Council for Persons with Disability.
x. **Certified** copies of Log books for ownership of Machines and Equipment. Those hiring **Must** provide **certified** copies of Lease Agreements and **certified** copies of Log books,
xi. **Current** Sworn Affidavit not more than 3 months before the tender opening date
xii. **Proof** of having opened a bank account in the contractor's name
xiii. Form of tender correctly filled, signed & stamped
xiv. Confidential Business Questionnaire correctly filled, signed & stamped
xv. Dully filled and signed anti-fraud and anticorruption form
xvi. Dully filled and signed environment and social commitment form
xvii. Bidders **Must serialize sequentially** all pages of their tender documents submitted.

1.3 The Tenderer shall bear all costs associated with the preparation and submission of his tender, and the Employer will in no case be responsible or liable for those costs even if the tender is cancelled indefinitely.

1.4 The Tenderer, at the Tenderer's own responsibility and risk, is encouraged to visit and examine the Site of the Works and its surroundings, and obtain all information that may be necessary for preparing the tender and entering into a contract for construction of the Works. The costs of visiting the Site shall be at the Tenderer's own expense.

1.5 The procurement entity's employees, committee members, board members and their relative (spouse and children) are not eligible to participate in the tender.

1.6 Interested candidates to obtain tender documents from the KeRRA website at www.kerra.go.ke for free from the date on the advert.

1.7 The procuring entity shall allow the tenderer to review the tender document free of charge before purchase.

1.8 Estimated cost of works **5,000,000.00 (Kenya shillings Five Million Only).**

## 2. Tender Documents

2.1 The complete set of tender documents comprises the documents listed here below and any addenda issued in accordance with clause 2.4 here below: -

(a) The instructions to Tenderers
(b) Form of Tender
(c) Conditions of Contract and Appendix to Form of Agreement
(d) Specifications
(e) Drawings
(f) Bills of Quantities
(g) Other materials required to be filled and submitted in accordance with these Instructions and Conditions

2.2 The Tenderer shall examine all instructions, forms and specifications in the tender documents. Failure to furnish all information required by the tender documents may result in rejection of his tender.

2.3 A prospective Tenderer making inquiries of the tendering documents may notify the Employer in writing or by cable, telex or facsimile at the address indicated in the letter of invitation to tender. The Employer will respond to any request for clarification received earlier than seven [7] days prior to the deadline for submission of tenders. Copies of the Employer's response will be forwarded to all persons issued with tendering documents, including a description of the inquiry, but without identifying its source.

2.4 Before the deadline for submission of tenders, the Employer may modify the tendering documents by issuing addenda. Any addendum thus issued shall be part of the tendering documents and shall be communicated in writing or by cable, telex or facsimile to all Tenderers. Prospective Tenderers shall acknowledge receipt of each addendum in writing to the Employer.

2.5 To give prospective Tenderers reasonable time in which to take an addendum into account in preparing their tenders, the Employer shall extend, as necessary, the deadline for submission of tenders in accordance with clause 4.2 here below.

## 3. Preparation of Tenders

3.1 All documents relating to the tender and any correspondence shall be in English Language.

3.2 The tender submitted by the Tenderer shall comprise the following: -

(a) The Tender;
(b) Tender Security;
(c) Priced Bill of Quantities for lump-sum Contracts
(d) Any other materials required to be completed and submitted by Tenderers.

3.3 The Tenderer shall fill in rates and prices for all items of the Works described in the Bill of Quantities. Items for which no rate or price is entered by the Tenderer will not be paid for when executed and shall be deemed covered by the other rates and prices in the Bill of Quantities. All duties, taxes and other levies payable by the Contractor under the Contract, as of 30 days prior to the deadline for submission of tenders, shall be included in the tender price submitted by the Tenderer.

3.4 The rates and prices quoted by the Tenderer shall not be subject to any adjustment during the performance of the Contract.

3.5 The unit rates and prices shall be in Kenya Shillings.

3.6 Tenders shall remain valid for a period of **one hundred and Twenty (120**) days from the date of submission. However, in exceptional circumstances, the Employer may request that the Tenderers extend the period of validity for a specified additional period. The request and the Tenderers' responses shall be made in writing.

3.7 The Tenderer shall prepare one original of the documents comprising the tender documents as described in these Instructions to Tenderers.

3.8 The original shall be typed or written in indelible ink and shall be signed by a person or persons duly authorized to sign on behalf of the Tenderer. All pages of the tender where alterations or additions have been made shall be initialed by the person or persons signing the tender.

3.9 Clarification of tenders shall be requested by the tenderer to be received by the procuring entity not later than 7 days prior to the deadline for submission of tenders.

3.10 The procuring entity shall reply to any clarifications sought by the tenderer within **7 days** of receiving the request to enable the tenderer to make timely submission of its tender.

## 4. Submission of Tenders

4.1 The tender duly filled and sealed in an envelope shall;-

(a) Be addressed to the Employer at the address provided in the invitation to tender;

[b] Bear the name and identification number of the Contract as defined in the invitation to tender; and

[c] Provide a warning not to open before the specified time and date for tender opening.

4.2 Tenders shall be delivered to the Employer at the address specified above not later than the time and date specified in the invitation to tender.

4.3 The tenderer shall not submit any alternative offers unless they are specifically required in the tender documents.

Each tenderer may submit only one tender. Any tenderer who fails to comply with this requirement will be disqualified.

4.4 Any tender received after the deadline for opening tenders will be returned to the tenderer un-opened.

4.5 The Employer may extend the deadline for submission of tenders by issuing an amendment in accordance with sub-clause 2.5 in which case all rights and obligations of the Employer and the Tenderers previously subject to the original deadline will then be subject to the new deadline.

## 5. Tender Opening and Evaluation

5.1 The tenders will be opened in the presence of the Tenderers' representatives who choose to attend at the time and in the place specified in the invitation to tender.

5.2 The Tenderers' names, the total amount of each tender and such other details as may be considered appropriate, will be announced at the opening by the Employer. Minutes of the tender opening, including the information disclosed to those present will also be prepared by the Employer.

5.3 Information relating to the examination, clarification, evaluation and comparison of tenders and recommendations for the award of the Contract shall not be disclosed to Tenderers or any other persons not officially concerned with such process until the award to the successful Tenderer has been announced. Any effort by a Tenderer to influence the Employer's officials, processing of tenders or award decisions may result in the rejection of his tender.

5.4 Tenders determined to be substantially responsive will be checked for any arithmetic errors. Errors will be corrected as follows:

(a) where there is a discrepancy between the amount in figures and the amount in words, the amount in words will prevail; and

(b) where there is a discrepancy between the unit rate and the line item total resulting from multiplying the unit rate by the quantity, the unit rate as quoted will prevail, unless in the opinion of the Employer's representative, there is an obvious typographical error, in which case the adjustment will be made to the entry containing that error.

(c) In the event of a discrepancy between the tender amount as stated in the Form of Tender and the corrected tender figure in the main summary of the Bill of Quantities/Quotation, the amount as stated in the Form of Tender shall prevail.

(d) The Error Correction Factor shall be computed by expressing the difference between the tender amount and the corrected tender sum as a percentage of the Corrected Builder's Work (i.e. corrected

tender sum less P.C. and Provisional Sums).

(e) The Error Correction Factor shall be applied to all Builder's Work (as a rebate or addition as the case may be) for the purposes of valuations for Interim Certificates and valuation of variations.

(f) The amount stated in the tender will be adjusted in accordance with the above procedure for the correction of errors and with concurrence of the Tenderer, shall be considered as binding upon the Tenderer. If the Tenderer does not accept the corrected amount, the tender may be rejected and the Tender Security forfeited.

5.5 The tender evaluation committee shall evaluate the tender within 30 days of the validity period from the date of opening the tender or extended as per Clause14 of the amended regulations (2013) of 46.

5.6 Contract price variations shall not be allowed for contracts not exceeding one year (12 months)

5.7 Where contract price variation is allowed, the valuation shall not exceed 25% of the original contract price.

5.8 Price variation requests shall be processed by the procuring entity within 30 days of receiving the request.

5.9 To assist in the examination, evaluation, and comparison of tenders, the Employer at his discretion, may request [in writing] any Tenderer for clarification of the tender, including breakdowns of unit rates which the employer may estimate to be too low compared to the market rates. The request for clarification and the response shall be in writing or by cable, telex or facsimile but no change in the tender price or substance of the tender shall be sought, offered or permitted.

5.10 The Tenderer shall not influence the Employer on any matter relating to his tender from the time of the tender opening to the time the Contract is awarded. Any effort by the Tenderer to influence the Employer or his employees in his decision on tender evaluation, tender comparison or Contract award may result in the rejection of the tender.

## 6. Award of Contract

6.1 The award of the Contract will be made to the Tenderer who has offered the lowest evaluated tender price.

6.2 Notwithstanding the provisions of clause 6.1 above, the Employer reserves the right to accept or reject any tender and to cancel the tendering process and reject all tenders at any time prior to the award of Contract without thereby incurring any liability to the affected Tenderer or Tenderers or any obligation to inform the affected Tenderer or Tenderers of the grounds for the action.

6.3 The Tenderer whose tender has been accepted will be notified of the award prior to expiration of the tender validity period in writing or by cable, telex or facsimile. This notification (hereinafter and in all Contract documents called the "Letter of Acceptance") will state the sum [hereinafter and in all Contract documents called the "Contract Price" which the Employer will pay the Contractor in consideration of the execution, completion, and maintenance of the Works by the Contractor as prescribed by the Contract. The contract shall be formed on the parties signing the contract. At the same time the other tenderers shall be informed that their tenders have not been successful.

6.4 The Contract Agreement will incorporate all agreements between the Employer and the successful Tenderer. It will be signed by the Employer and sent to the successful Tenderer, within 30 days following the notification of award. Within 21 days of receipt, the successful Tenderer will sign the Agreement and return it to the Employer.

6.5 Within 21 days after receipt of the Letter of Acceptance, the successful Tenderer shall deliver to the Employer a Performance Security amount stipulated in the Appendix to Conditions of Contract.

6.6 The parties to the contract shall have it signed within 30 days from the date of notification of contract award unless there is an administrative review request.

6.7 The procuring entity may at any time terminate procurement proceedings before contract award and shall not be liable to any person for the termination.

6.8 The procuring entity shall give prompt notice of the termination to the tenderers and on request give its reasons for termination within 14 days of receiving the request from any tenderer.

## 7. Corrupt and fraudulent practices

7.1 The procuring entity requires that the tenderer observes the highest standard of ethics during the procurement process and execution of the contract. A tenderer shall sign a declaration that he has not and will not be involved in corrupt and fraudulent practices.

7.2 The procuring entity will reject a tender if it determines that the tenderer recommended for award has engaged in corrupt and fraudulent practices in competing for the contract in question.

7.3 Further a tenderer who is found to have indulged in corrupt and fraudulent practices risks being debarred from participating in public procurement in Kenya.

## SECTION III: QUALIFICATION CRITERIA

| Qualification Criteria | | | Compliance Requirements | Documentation |
|---|---|---|---|---|
| No. | Subject | Requirement | Single Entity | Submission Requirements |
| **1. Eligibility** | | | | |
| 1.1 | Eligibility | Nationality in accordance with confidential business Questionnaire in the standard forms | Must meet requirement | Refer to standard form section 7 |
| 1.4 | Incorporation & Registration | Pursuant to sub clause 1.2 the following shall be provided;<br>- Certified Copy of Certificate of incorporation to show that the applicant is a registered company and legally authorised to do business in Kenya<br><br>- Proof of registration with the National Construction Authority Category NCA6,7,8 and above For Road Works.<br>- Proof of prequalification with KeRRA Category..C. | Must meet requirement | Refer to standard form section 7 |
| 2.1 | History of Non-Performing Contracts | Non-performance of a contract did not occur within the last **three (3)** years prior to the deadline for application submission based on all information on fully settled disputes or litigation. A fully settled dispute or litigation is one that has been resolved in accordance with the Dispute Resolution Mechanism under the respective contract, and where all appeal instances available to the applicant have been exhausted. | Must meet requirement by itself or as party to past | |
| 2.2 | Pending Litigation | All pending litigation shall in total not represent more than fifty percent (50%)] of the Applicant's net worth and shall be treated as resolved against the Applicant. | Must meet requirement by itself or as party to past | Refer to standard form section 7 |
| 3.1 | Financial Performance | Submission of audited balance sheets or if not required by the law of the applicant's country, other financial statements acceptable to the Employer, for the last two [2] years to demonstrate:<br>(a) The current soundness of the applicants' financial position and its prospective long term profitability, and<br>(b) Capacity to have a cash flow amount of min Kshs 0.5 Million equivalent working capital | Must meet requirement<br><br>(a) Must meet requirement<br><br>(b) Must meet requirement | Refer to standard form section 7 |

| Qualification Criteria | | | Compliance Requirements | Documentation |
|---|---|---|---|---|
| No. | Subject | Requirement | Single Entity | Submission Requirements |
| 3.2 | Average Annual Construction Turnover | Minimum average annual construction turnover of Kshs.3m calculated as total certified payments received for contracts in progress or completed, within the last 3 years | Must meet requirement | Refer to standard form section 7 |
| 4.1 | General Construction Experience | Experience under construction contracts in the role of contractor, subcontractor, or management contractor for at least the last 3yrs prior to the applications submission deadline | Must meet requirement | Refer to standard form section 7 |
| 4.2(a) | Specific Construction Experience | Participation as contractor, management contractor or subcontractor, in at least one (1) contracts within the last three (3) years, each with a value of at least Kshs. 1,000,000.00 (one million), that have been successfully and substantially completed and that are similar to the proposed works. The similarity shall be based on the physical size, complexity, methods/technology or other characteristics as described in Scope of Works | Must meet requirement | Refer to standard form section 7 |
| 4.2(b) | | b) For the above or other contracts executed during the period stipulated in 4.2(a) above, a minimum construction experience in at least one (1) of:<br>(i) Routine maintenance<br>(ii) Spot improvement & rehabilitation works. | Must meet requirements | Refer to standard form section 7 |
| 4.3 | Work Methodology | Submission of a brief work methodology | Should demonstrate understanding of the scope of works and other general requirements | Refer to standard form section 7 |
| **5. Equipment Holding** | | | | |
| 5.1 | Minimum number of Equipment | The bidder must indicate the minimum the core plant and equipment considered by the company to be necessary for undertaking the project together with proof of ownership | Must meet the requirement | Refer to standard form section 7 |
| **6. Current Commitment** | | | | |
| 6.1 | On-going contracts | The total value of current works on the on-going contracts must not exceed Kshs. 10million | Must meet requirements | |

| Qualification Criteria | | | Compliance Requirements | Documentation |
|---|---|---|---|---|
| No. | Subject | Requirement | Single Entity | Submission Requirements |
| **7. Site Staff** | | | | |
| 1 | Site Agent | The site staff shall possess minimum levels set below;<br><br>Qualification = Dip. Civil Engineering<br>General Experience = 8 yrs<br>Specific Experience =3 Yrs | Must meet requirements<br><br>N/A | Refer to guideline notes |
| 2 | Dep. Site Agent/ Site Engineer | Qualification = Dip. Civil Engineering<br>General Experience = 8 yrs<br>Specific Experience =3 Yrs | N/A | |
| 3 | Senior Foreman | Qualification = Dip. Civil Engineering<br>General Experience = 3 yrs<br>Specific Experience =2 Yrs | Must meet | |
| 4 | Site Surveyor | Qualification = Dip. Survey<br>General Experience = 3 yrs<br>Specific Experience =2 Yrs | Must meet | |
| 5 | Foreman (1 N0.) | Qualification = Dip. Civil Engineering<br>General Experience = 3 yrs<br>Specific Experience =2 Yrs | Must meet | |

## SECTION IV: CONDITIONS OF CONTRACT


| | Table of Clauses | Page |
|---|---|---|
| 1. | DEFINITIONS…… | 20 |
| 2. | CONTRACT DOCUMENTS…… | 21 |
| 3. | EMPLOYER'S REPRESENTATIVE'S DECISIONS…… | 21 |
| 4. | WORKS, LANGUAGE AND LAW OF CONTRACT……. | 22 |
| 5. | SAFETY, TEMPORARY WORKS AND DISCOVERIES……. | 22 |
| 6. | WORK PROGRAM AND SUB-CONTRACTING…….. | 22 |
| 7. | THE SITE…….. | 22 |
| 8. | INSTRUCTIONS…… | 23 |
| 9. | EXTENSION OF COMPLETION DATE…….. | 23 |
| 10. | MANAGEMENT MEETINGS……. | 24 |
| 11. | DEFECTS…… | 24 |
| 12. | BILLS OF QUANTITIES……. | 25 |
| 13. | VARIATIONS…….. | 25 |
| 14. | PAYMENT CERTIFICATES AND FINAL ACCOUNT …… | 26 |
| 15. | INSURANCES ……. | 27 |
| 16. | LIQUIDATED DAMAGES…… | 27 |
| 17. | COMPLETION AND TAKING OVER…… | 27 |
| 18. | TERMINATION…… | 27 |
| 19. | PAYMENT UPON TERMINATION…… | 28 |
| 20. | CORRUPT GIFTS AND PAYMENTS OF COMMISSION…… | 28 |
| 21. | SETTLEMENT OF DISPUTES…… | 29 |

CONDITIONS OF CONTRACT

## 1. Definitions

1.1 In this Contract, except where context otherwise requires, the following terms shall be interpreted as indicated;

I. "Bills of Quantities" means the priced and completed Bill of Quantities forming part of the tender [where applicable].

II. "Schedule of Rates" means the priced Schedule of Rates forming part of the tender [where applicable].

III. "The Completion Date" means the date of completion of the Works as certified by the Employer's Representative.

IV. "The Contract" means the agreement entered into by the Employer and the Contractor as recorded in the Agreement Form and signed by the parties.

V. "The Contractor" refers to the person or corporate body whose tender to carry out the Works has been accepted by the Employer.

VI. "The Contractor's Tender" is the completed tendering document submitted by the Contractor to the Employer.

VII. "The Contract Price" is the price stated in the Letter of Acceptance.

VIII. "Days" are calendar days; "Months" are calendar months.

IX. "A Defect" is any part of the Works not completed in accordance with the Contract.

X. "The Defects Liability Certificate" is the certificate issued by Employer's Representative upon correction of defects by the Contractor.

XI. "The Defects Liability Period" is the period named in the Appendix to Conditions of Contract and calculated from the Completion Date.

XII. "Drawings" include calculations and other information provided or approved by the Employer's Representative for the execution of the Contract.

XIII. "Employer" Includes Central or Local Government administration, Universities, Public Institutions and Corporations and is the party who employs the Contractor to carry out the Works.

XIV. "Equipment" is the Contractor's machinery and vehicles brought temporarily to the Site for the execution of the Works.

XV. "Site" means the place or places where the permanent Works are to be carried out including workshops where the same is being prepared.

XVI. "Materials" are all supplies, including consumables, used by the Contractor for incorporation in the Works.

XVII. "Employer's Representative" is the person appointed by the Employer and notified to the Contractor for the purpose of supervision of the Works.

XVIII. "Specification" means the Specification of the Works included in the Contract.

XIX. "Start Date" is the date when the Contractor shall commence execution of the Works.

XX. " A Subcontractor" is a person or corporate body who has a Contract with the Contractor to carry out a part of the Work in the Contract, which includes Work on the Site.

XXI. "Temporary works" are works designed, constructed, installed, and removed by the Contractor which are needed for construction or installation of the Works.

XXII. " A Variation" is an instruction given by the Employer's Representative which varies the Works.

XXIII. "The Works" are what the Contract requires the Contractor to construct, install, and turnover to the Employer.

## 2. Contract Documents

2.1 The following documents shall constitute the Contract documents and shall be interpreted in the following order of priority;

(1) Agreement,
(2) Letter of Acceptance,
(3) Contractor's Tender,
(4) Conditions of Contract,
(5) Specifications,
(6) Drawings,
(7) Bills of Quantities

**3. Employer's Representative's Decisions**

3.1 Except where otherwise specifically stated, the Employer's Representative will decide contractual matters between the Employer and the Contractor in the role representing the Employer.

**4. Works, Language and Law of Contract**

4.1 The Contractor shall construct and install the Works in accordance with the Contract documents. The Works may commence on the Start Date and shall be carried out in accordance with the Program submitted by the Contractor, as updated with the approval of the Employer's Representative, and complete them by the Intended Completion Date.

4.2 The ruling language of the Contract shall be English language and the law governing the Contract shall be the law of the Republic of Kenya.

**5. Safety, Temporary works and Discoveries**

5.1 The Contractor shall be responsible for design of temporary works and shall obtain approval of third parties to the design of the temporary works where required.

5.2 The Contractor shall be responsible for the safety of all activities on the Site.

5.3 Any thing of historical or other interest or significant value unexpectedly discovered on the Site shall be the property of the Employer. The Contractor shall notify the Employer's Representative of such discoveries and carry out the Employer's Representative's instructions for dealing with them.

**6 Work Program and Sub-contracting**

6.1 Within seven days after Site possession date, the Contractor shall submit to the Employer's Representative for approval a program showing the general methods, arrangements, order and timing for all the activities in the Works.

6.2 The Contractor may sub-contract the Works (but only to a maximum of 25 percent of the Contract Price) with the approval of the Employer's Representative. However, he shall not assign the Contract without the approval of the Employer in writing. Sub-contracting shall not alter the Contractor's obligations.

**7 The site**

7.1 The Employer shall give possession of all parts of the Site to the Contractor.

7.2 The Contractor shall allow the Employer's Representative and any other person authorized by the Employer's Representative, access to the Site and to any place where work in connection with the Contract is being carried out or is intended to be carried out.

**8 Instructions**

8.1 The Contractor shall carry out all instructions of the Employer's Representative which are in accordance with the Contract.

**9 Extension of Completion Date**

9.1 The Employer's Representative shall extend the Completion Date if an occurrence arises which makes it impossible for completion to be achieved by the Intended Completion Date. The Employer's Representative shall decide whether and by how much to extend the Completion Date.

9.2 For the purposes of this clause, the following occurrences shall be valid for consideration;

Delay by:-

(a) force majeure, or

(b) reason of any exceptionally adverse weather conditions, or

(c) reason of civil commotion, strike or lockout affecting any of the trades employed upon the Works or any of the trades engaged in the preparation, manufacture or transportation of any of the goods or materials required for the Works, or

(d) reason of the Employer's Representative's instructions issued under these Conditions, or

(e) reason of the contractor not having received in due time necessary instructions, drawings, details or levels from the Employer's Representative for which he specifically applied in writing on a date which having regard to the date for Completion stated in the appendix to these Conditions or to any extension of time then fixed under this clause was neither unreasonably distant from nor unreasonably close to the date on which it was necessary for him to receive the same, or

(f) delay on the part of artists, tradesmen or others engaged by the Employer in executing work not forming part of this Contract, or

(g) Reason of delay by statutory or other services providers or similar bodies engaged directly by the Employer, or

(h) Reason of opening up for inspection of any Work covered up or of the testing or any of the Work, materials or goods in accordance with these conditions unless the inspection or test showed that the Work, materials or goods were not in accordance with this Contract, or

(i) Reason of delay in appointing a replacement Employer's Representative, or

(j) Reason of delay caused by the late supply of goods or materials or in executing Work for which the Employer or his agents are contractually obliged to supply or to execute as the case may be, or

(k) Delay in receiving possession of or access to the Site.

**10 Management Meetings**

10.1 A Contract management meeting shall be held regularly and attended by the Employer's Representative and the Contractor. Its business shall be to review the plans for the remaining Work. The Employer's Representative shall record the business of management meetings and provide copies of the record to those attending the meeting and the Employer. The responsibility of the parties for actions to be taken shall be decided by the Employer's Representative either at the management meeting or after the management meeting and stated in writing to all who attend the meeting.

10.2 Communication between parties shall be effective only when in writing.

**11 Defects**

11.1 The Employer's Representative shall inspect the Contractor's work and notify the Contractor of any defects that are found. Such inspection shall not affect the Contractor's responsibilities. The Employer's Representative may instruct the Contractor to search for a defect and to uncover and test any Work that the Employer's Representative considers may have a defect. Should the defect be found, the cost of uncovering and making good shall be borne by the Contractor. However if there is no defect found, the cost of uncovering and making good shall be treated as a variation and added to the Contract Price.

11.2 The Employer's Representative shall give notice to the Contractor of any defects before the end of the Defects Liability Period, which begins at Completion, and is defined in the Appendix to Form of Agreement.

11.3 Every time notice of a defect is given, the Contractor shall correct the notified defect within the length of time specified by the Employer's Representative's notice. If the Contractor has not corrected a defect within the time specified in the Employer's Representative's notice, the Employer's Representative will assess the cost of having the defect corrected by other parties and such cost shall be treated as a variation and be deducted from the Contract Price.

**12 Bills of Quantities**

12.1 The Bills of Quantities shall contain items for the construction, installation, testing and commissioning of the Work to be done by the Contractor. The Contractor will be paid for the quantity of the Work done at the rates in the Bills of Quantities for each item. Items against which no rate is entered by the Tenderer will not be paid for when executed and shall be deemed covered by the rates for other items in the Bills of Quantities.

12.2 Where Bills of Quantities do not form part of the Contract, the Contract Price shall be a lump sum (which shall be deemed to have been based on the rates in the Schedule of Rates forming part of the tender) and shall be subject to re-measurement after each stage.

**13 Variations**

13.1 The Contractor shall provide the Employer's Representative with a quotation for carrying out the variations when requested to do so. The Employer's Representative shall assess the quotation and shall obtain the necessary authority from the Employer before the variation is ordered.

13.2 If the Work in the variation corresponds with an item description in the Bill of Quantities, the rate in the Bill

of Quantities shall be used to calculate the value of the variation. If the nature of the Work in the variation does not correspond with items in the Bill of Quantities, the quotation by the Contractor shall be in the form of new rates for the relevant items of Work.

13.3 If the Contractor's quotation is unreasonable, the Employer's Representative may order the variation and make a change to the Contract Price, which shall be based on the Employer's Representative's own forecast of the effects of the variation on the Contractor's costs.

**14 Payment Certificates and Final Account**

14.1 The Contractor shall be paid after completion of all works inspected and accepted.

14.2 Upon deciding that Works included in a particular stage are complete, the Contractor shall submit to the Employer's Representative his application for payment. The Employer's Representative shall check, adjust if necessary and certify the amount to be paid to the Contractor within 21 days of receipt of the Contractor's application. The Employer shall pay the Contractor the amounts so certified within 30 days of the date of issue of each Interim Certificate.

14.3 The Contractor shall supply the Employer's Representative with a detailed final account of the total amount that the Contractor considers payable under the Contract before the end of the Defects Liability Period. The Employer's Representative shall issue a Defect Liability Certificate and certify any final payment that is due to the Contractor within 30 days of receiving the Contractor's account if it is correct and complete. If it is not, the Employer's Representative shall issue within 21 days a schedule that states the scope of the corrections or additions that are necessary. If the final account is still unsatisfactory after it has been resubmitted, the Employer's Representative shall decide on the amount payable to the Contractor and issue a Final Payment Certificate. The Employer shall pay the Contractor the amount so certified within 60 days of the issue of the Final Payment Certificate.

14.4 If the period laid down for payment to the Contractor upon each of the Employer's Representative's Certificate by the Employer has been exceeded, the Contractor shall be entitled to claim simple interest calculated pro-rata on the basis of the number of days delayed at theCentral Bank of Kenya's average base lending rate prevailing on the first day the payment becomes overdue. The Contractor will be required to notify the Employer within 15 days of receipt of delayed payments of his intentions to claim interest.

**15. Insurance**

15.1 The Contractor shall be responsible for and shall take out appropriate cover against, among other risks, personal injury; loss of or damage to the Works, materials and plant; and loss of or damage to property.

**16. Liquidated Damages**

16.1 The Contractor shall pay liquidated damages to the Employer at the rate 0.001 per cent of the Contract price per day for each day that the actual Completion Date is later than the Intended Completion Date except in the case of any of the occurrences listed under clause 9.2. The Employer may deduct liquidated damages from payments due to the Contractor. Payment of liquidated damages shall not affect the Contractor's liabilities.

**17. Completion and Taking Over**

17.1 Upon deciding that the Work is complete the Contractor shall request the Employer's Representative to issue a Certificate of Completion of the Works, upon deciding that the Work is completed.

The Employer shall take over the Site and the Works within seven days of the Employer's Representative issuing a Certificate of Completion.

**18. Termination**

18.1 The Employer or the Contractor may terminate the Contract if the other party causes a fundamental breach of the Contract. These fundamental breaches of Contract shall include, but shall not be limited to, the following;

(a) the Contractor stops Work for 30 days continuously without reasonable cause or authority from the Employer's Representative;

(b) the Contractor is declared bankrupt or goes into liquidation other than for a reconstruction or

amalgamation;

(c) a payment certified by the Employer's Representative is not paid by the Employer to the Contractor within 30 days after the expiry of the payment periods stated in sub clauses 14.2 and 14.3 hereinabove.

(d) the Employer's Representative gives notice that failure to correct a particular defect is a fundamental breach of Contract and the Contractor fails to correct it within a reasonable period of time.

18.2 If the Contract is terminated, the Contractor shall stop Work immediately, and leave the Site as soon as reasonably possible. The Employer's Representative shall immediately thereafter arrange for a meeting for the purpose of taking record of the Works executed and materials, goods, equipment and temporary buildings on Site.

**19. Payment Upon Termination**

19.1 The Employer may employ and pay other persons to carry out and complete the Works and to rectify any defects and may enter upon the Works and use all materials on Site, plant, equipment and temporary works.

19.2 The Contractor shall, during the execution or after the completion of the Works under this clause, remove from the Site as and when required within such reasonable time as the Employer's Representative may in writing specify, any temporary buildings, plant, machinery, appliances, goods or materials belonging to him, and in default thereof , the Employer may (without being responsible for any loss or damage) remove and sell any such property of the Contractor, holding the proceeds less all costs incurred to the credit of the Contractor.

19.3 Until after completion of the Works under this clause, the Employer shall not be bound by any other provision of this Contract to make any payment to the Contractor, but upon such completion as aforesaid and the verification within a reasonable time of the accounts therefor the Employer's Representative shall certify the amount of expenses properly incurred by the Employer and, if such amount added to the money paid to the Contractor before such determination exceeds the total amount which would have been payable on due completion in accordance with this Contract, the difference shall be a debt payable to the Employer by the Contractor; and if the said amount added to the said money be less than the said total amount, the difference shall be a debt payable by the Employer to the Contractor.

**20. Corrupt Gifts and Payments of Commission**

20.1 The Contractor shall not;

(a) Offer or give or agree to give to any person in the service of the Employer any gifts or consideration of any kind as an inducement or reward for doing or forbearing to do or for having done or forborne to do any act in relation to the obtaining or execution of this or any other contract with the Employer or for showing or forbearing to show favour or disfavour to any person in relation to this or any other contract with the Employer.

(b) Any breach of this Condition by the Contractor or by anyone employed by him or acting on his behalf (whether with or without the knowledge of the Contractor) shall be an offence under the Laws of Kenya.

**21. Settlement of Disputes**

21.1 Any dispute arising out of the Contract which cannot be amicably settled between the parties shall be referred by either party to the arbitration and final decision of a person to be agreed between the parties. Failing agreement to concur in the appointment of an Arbitrator, the Arbitrator shall be appointed by the chairman of the Chartered Institute of Arbitrators, Kenya branch, on the request of the applying party.

## SECTION V: APPENDIX TO FORM OF AGREEMENT

This Appendix to Form of Agreement forms part of the Agreement.

| **Item** | **Data** |
|---|---|
| Time for Completion | 9 (nine) Months, |
| Priority of Documents | The documents forming the Contract shall be interpreted in the following order of priority:<br>• The Contract Agreement and Appendix to form of agreement<br>• The Letter of Acceptance<br>• The Form of Tender<br>• The Conditions of Contract, Part II - Conditions of Particular Application<br>• The Conditions of Contract, Part I - General Conditions of Contract<br>• The Specifications<br>• The Drawings,<br>• The Priced Bill of Quantities |
| Law of Contract | Laws of the Republic of Kenya |
| Language | English |
| Provision of Site | On Commencement Date |
| Name and Address of Employer | Director General<br>Kenya Rural Roads Authority<br>P.O. Box 48151-00100<br>**Nairobi** |
| Authorised Person | Director **(**Road Asset Management),<br>Kenya Rural Roads Authority<br>P.O. Box 48151-00100<br>**Nairobi** |
| Name and Address of the Engineer | Regional Deputy Director - Roads,<br>Kenya Rural Roads Authority<br>P. O. Box 102- 80500 Lamu.<br>**(LAMU REGION)** |
| Name and Address of Engineer's Representative | Constituency Roads Officer<br>(Name of Constituency……..)<br>(LAMU REGION) |
| Penalty to the Contractor for Employer paying workers on his behalf | 10% of the amount paid to the workers. |
| Performance Security<br><br>Amount<br><br>Form | (Refer to guideline Notes)<br><br>0% of sum stated as the Contract Price<br><br>Bank Guarantee or Insurance Bond issued by PPOA approved insurance companies |

| **Item** | **Data** |
|---|---|
| Requirements of Contractors Design | Not applicable |
| Programme<br>⇨ Time of Submission | Within 14 days of Commencement Date |
| ⇨ Form of Programme<br><br>⇨ Interval Updates | Bar Chart<br><br>As requested by the RM |
| Liquidated Damages<br>Amount payable due to failure to complete | 0.01% of Contract Price per Day to a limit of 1% of Contract Price. |
| Defects Liability | Refer to guideline Notes |
| Period of notifying defects | 90 days calculated from the date stated in the notice under sub clause 11.2 |
| Percentage of Retention | Refer to guideline Notes |
| Maximum Amount of Advance Payment | Refer to guideline Notes |
| Form of Guarantee for Advance Payment | N/A |
| Valuation of Works | Re-measurements with Bills of Quantities |
| Repayment Schedule for Advance Payment | N/A |
| Minimum Amount of Interim Payment | **Full payment upon completion of all works** |
| Currency of Payment | Kenya Shilling |
| Rate of Interest | Simple Interest at a rate of 2% above mean Base Lending Rate as issued by the Central Bank of Kenya. |
| Insurance | Required/ Not required |
| Insurance<br>⇨ The Works, materials plants & fees- Contractor's All risks<br><br>⇨ Third party injury to persons and damage to property<br><br>⇨ Workers compensation (WIBA-workers injury benefits policy) | Amount of Cover<br>The Contract Price stated in the Agreement +15%+replacement cost of equipment on site.<br><br>Kshs. ……(DD to insert figure)<br><br>As per work injury benefits act 2007 laws of Kenya |
| Arbitration<br>⇨ Rules<br>⇨<br>⇨ Appointing Authority<br><br>⇨ Place of Arbitration | <br>CAP 49 of the Laws of Kenya<br><br>Chairman Chartered Institute of Arbitrators, Kenya Branch.<br><br>Kenya Rural Roads Authority, Headquarters |

## SECTION VI: STANDARD FORMS

### Table of Contents

**CONTENTS:** **PAGE**


**FORM OF INVITATION FOR TENDERS....22**
**FORM OF TENDER....23**
**LETTER OF AWARD....24**
**FORM OF TENDER SECURITY....24**
**PERFORMANCE BANK GUARANTEE....25**
**BANK GUARANTEE FOR ADVANCE PAYMENT....27**
**QUALIFICATION INFORMATION....29**
**CONFIDENTIAL BUSINESS QUESTIONNAIRE....30**
**SCHEDULE OF LABOUR: - BASIC RATES....33**
**CERTIFICATE OF TENDERER'S VISIT TO SITE....34**
**FORM OF WRITTEN POWER-OF-ATTORNEY....35**
**KEY PERSONNEL....35**
**SCHEDULE OF THE PROPOSED APPROPRIATE EQUIPMENT.....37**
**SCHEDULE OF COMPLETED CIVIL WORKS CARRIED OUT IN THE PREVIOUS YEARS**
**SCHEDULE OF ONGOING PROJECTS....39**
**OTHER SUPPLEMENTARY INFORMATION....40**
**ADJUDICATOR'S AGREEMENT....40**
**FRAUD & CORRUPTION....43**
**ENVIRONMENTAL AND SOCIAL COMMITMENT....44**
**PUBLIC PROCUREMENT ADMINISTRATIVE REVIEW BOARD....45**
**DECLARATION FORM....46**

## FORM OF INVITATION FOR TENDERS

_____[Date]

To: _____ [Name of Contractor]
_____[Address]
_____
_____

Dear Sirs:

Reference:_____[Contract Name]

You are qualified to tender for the above Contract.

We hereby invite you and other qualified Tenderers to submit a Tender for the execution and completion of the Works.

A complete set of Tender documents may be purchased from ____
_____
[Mailing address, cable/telex/facsimile numbers].

Upon payment of a non-refundable fee of Kshs_____

All Tenders shall be accompanied by .....number of copies of the same and a Tender Security in the form and amount of Kshs…… and shall be delivered to:
_____
[Address and location]

at or before _____(time and date). Tenders will be opened immediately thereafter, in the presence of those Tenderers' representatives who choose to attend.

Please confirm receipt of this letter and your intention to Tender in writing.

Yours faithfully,

_____ Authorized Signature

_____ Name and Title

## FORM OF TENDER

TO: _____[Name of Employer) _____[Date]

_____[Name of Contract]

Dear Sir,

1. In accordance with the Conditions of Contract, Specifications, Drawings and Bills of Quantities for the execution of the above Works, We, the undersigned offer to construct, install and complete such Works and remedy any defects therein for the sum of Kshs.

   _____[Amount in figures] Kenya Shillings

   _____[Amount in words]

2. We undertake, if our Tender is accepted, to commence the Works on the commencement date and to complete the whole of the Works comprised in the Contract within the time stated in the Appendix.

3. We agree to abide by this Tender until _____[Insert date], and it shall remain binding upon us and may be accepted at any time before that date.
4. Unless and until a formal Agreement is prepared and executed this Tender together with your written acceptance thereof, shall constitute a binding Contract between us.

4. We understand that you are not bound to accept the lowest or any Tender you may receive.

Dated this _____day of _____20_____

Signature _____in the capacity of_____

Duly authorized to sign Tenders for and on behalf of _____[Name of Tenderer] of

_____[Address of Tenderer]

Witness: Name_____

Address_____

Signature_____

Date_____

## LETTER OF AWARD

[Letterhead paper of the Employer]

_____[Date]

To: _____
[Name of the Contractor]

_____
[Address of the Contractor]

Dear Sir,

This is to notify you that your Tender dated _____
for the execution of _____
[name of the Contract and identification number, as given in the Tender documents] for the Contract Price of Kshs. _____ [amount in figures] [Kenya Shillings_____(amount in words) ] in accordance with the Instructions to Tenderers is hereby accepted.

You are hereby instructed to proceed with the execution of the said Works in accordance with the Contract documents.

Authorized Signature ……

Name and Title of Signatory ……

Attachment :

## FORM OF TENDER SECURITY

WHEREAS ……..(hereinafter called "the Tenderer") has submitted a Tender dated …… for the Rehabilitation/Spot Improvement of
……
…… (Name of Contract)

KNOW ALL PEOPLE by these presents that WE …… having our registered office at ……(hereinafter called "the Bank"), are bound unto ……(hereinafter called "the Employer") in the sum of Kshs.…… for which payment well and truly to be made to the said Employer, the Bank binds itself, its successors and assigns by these presents sealed with the Common Seal of the said Bank this ……. Day of ……20……

THE CONDITIONS of this obligation are:

1. If after Tender opening the Tenderer withdraws his Tender during the period of Tender validity specified in the Instructions to Tenderers
   Or

2. If the Tenderer, having been notified of the acceptance of his Tender by the Employer during the Period of Tender validity:

   (a) fails or refuses to execute the Form of Agreement in accordance with the Instructions to Tenderers, if required; or

   (b) fails or refuses to furnish the Performance Security, in accordance with the Instructions to Tenderers;

   We undertake to pay to the Employer up to the above amount upon receipt of his first written demand, without the Employer having to substantiate his demand, provided that in his demand the Employer will note that the amount claimed by him is due to him, owing to the occurrence of one or both of the two conditions, specifying the occurred condition or conditions.

   This guarantee will remain in force up to and including thirty (30) days after the Period of Tender validity, and any demand in respect thereof should reach the Bank not later than the said date.

_____ _____
[Date [Signature of the Bank]

_____ _____
[Witness] [Seal]

## PERFORMANCE BANK GUARANTEE

To: _____(Name of Employer) _____(Date)

_____(Address of Employer)

Dear Sir,

WHEREAS _____(hereinafter called "the Contractor") has undertaken, in pursuance of Contract No. _____ dated _____ to execute _____ (hereinafter called "the Works");

AND WHEREAS it has been stipulated by you in the said Contract that the Contractor shall furnish you with a Bank Guarantee by a recognised bank for the sum specified therein as security for compliance with his obligations in accordance with the Contract;

AND WHEREAS we have agreed to give the Contractor such a Bank Guarantee:

NOW THEREFORE we hereby affirm that we are the Guarantor and responsible to you, on behalf of the Contractor, up to a total of Kshs. _____ (amount of Guarantee in figures) Kenya Shillings_____ (amount of Guarantee in words), and we undertake to pay you, upon your first written demand and without cavil or argument, any sum or sums within the limits of Kenya Shillings _____ (amount of Guarantee in words) as aforesaid without your needing to prove or to show grounds or reasons for your demand for the sum specified therein.

We hereby waive the necessity of your demanding the said debt from the Contractor before presenting us with the demand.

We further agree that no change, addition or other modification of the terms of the Contract or of the Works to be performed thereunder or of any of the Contract documents which may be made between you and the Contractor shall in any way release us from any liability under this Guarantee, and we hereby waive notice of any change, addition, or modification.

This Guarantee shall be valid until the date of issue of the Employer's notice under Sub-Clause 8.2 (Taking-Over Notice), of the Conditions of Contract.

SIGNATURE AND SEAL OF THE GUARANTOR _____

Name of Bank _____

Address _____

Date _____

## BANK GUARANTEE FOR ADVANCE PAYMENT

To: _____ [Name of Employer] _____(Date)
_____[Address of Employer]

Gentlemen,

Ref: _____[name of Contract]

In accordance with the provisions of the Conditions of Contract of the above-mentioned Contract, **We,**_____[name and Address of Contractor] (hereinafter called "the Contractor") shall furnish you with a Bank guarantee by a recognised Bank for the sum specified therein as a security for compliance with his obligations in accordance with the Contract in an amount of Kshs._____[amount of Guarantee in figurers] Kenya Shillings_____[amount of Guarantee in words].

**We**, the _____[bank or financial institution], as instructed by the Contractor, agree unconditionally and irrevocably to guarantee as primary obligator and not as Surety merely, the payment to _____[name of Employer] on his first demand without whatsoever right of objection on our part and without his first claim to the Contractor, in the amount not exceeding Kshs_____[amount of Guarantee in figures]Kenya Shillings _____[amount of Guarantee in words].

**We** further agree that no change or addition to or other modification of the terms of the Contract or of the Works to be performed thereunder or of any of the Contract documents which may be made between _____[name of Employer] and the Contractor, shall in any way release us from any liability under this Guarantee, and we hereby waive notice of any such change, addition or modification.

This Guarantee shall remain valid and in full effect from the date of the Advance Payment under the Contract until _____(name of Employer) receives full payment of the same amount from the Contract.

Yours faithfully,
Signature and Seal _____

Name of the Bank or financial institution _____

Address _____

Date _____

Witness: Name: _____

Address: _____

Signature: _____

Date: _____

## FORM OF AGREEMENT

**THIS AGREEMENT** is made on the ……day of ….. 2020 between the **Kenya Rural Roads Authority, of P.O. BOX 48151 - 00100, Nairobi, Kenya** hereinafter called the "**Employer** "of the one part and

**---------- ----------**, hereinafter called the "**Contractor**" of the other part.

**WHEREAS** the Employer is desirous that certain works should be executed, viz: ----------

---

And has accepted a Bid by the Contractor to execute, complete and maintain such works **NOW THIS AGREEMENT WITNESSETH as follows:**

In this agreement words and expressions shall have the same meanings as are respectively assigned to them in the Conditions of Contract hereinafter referred to.

The following documents shall be deemed to form and be read and construed as part of this Agreement, viz.:

The said BID dated ----------

- Conditions of Contract; Parts I and II
- The Standard and Special Specifications;
- Priced Bill of Quantities;
- Letter of Acceptance;
- Form of Tender
- Drawings;
- Appendix to the Form of Agreement
- Schedule Of Supplementary Information
- Other Documents/Materials/Conditions agreed and documented.

All aforesaid documents are hereinafter referred to as "**The Contract**".
In consideration of the payment to be made by the **Employer** to the **Contractor**, the Contractor covenants with the Employer to execute and complete the Works in conformity with the provisions of the Contract.

The Employer hereby covenants to pay the Contractor in consideration of the execution, completion and maintenance of the Works at the Contract Price or such other sum as may become payable under the Contract at the times and in the manner prescribed by the Contract.
**IN WITNESS WHEREOF** the parties hereto have caused their respective common seals to be hereto affixed (or have hereunto set their respective hands and seals) on the day and year first above written.

**SIGNED AND DELIVERED**
By the said Employer:……..……..……

Signature: ……..

Region:……LAMU……

(Deputy Director, Kenya Rural Roads Authority, LAMU Region)
(For and on behalf of the said Employer.)

In the presence of:…….....

Signature……

By the said Contractor: …….....

Signature……
Designation:……..……
(For and on behalf of the said Contractor)

In the presence of : …….....

Signature:……

Address:……..

## QUALIFICATION INFORMATION

TENDER QUESTIONNAIRE

Please fill in block letters.

1. Full name of Tenderer;

   ……

2. Full address of Tenderer to which Tender correspondence is to be sent (unless an agent has been appointed below);

   ……

3. Telephone number (s) of Tenderer;

   ……

4. Facsimile of Tenderer;
   ……

5. Name of Tenderer's representative to be contacted on matters of the Tender during the Tender period;
   ……

6. Details of Tenderer's nominated agent (if any) to receive Tender notices (name, address, telephone, telefax);

   ……

   ……

_____
Signature of Tenderer

Make copy and deliver to:_____(Name of Employer)
( The Tenderer shall leave one copy at the time of purchase of the Tender documents)

## CONFIDENTIAL BUSINESS QUESTIONNAIRE

You are requested to give the particulars indicated in Part 1 and either Part 2 (a) or 2 (b) whichever applies to your type of business.

You are advised that it is a serious offence to give false information on this Form.

**Part 1 – General**

Business Name ……

Location of business premises; Country/Town…….…

Plot No…… Street/Road ……

Postal Address…… Tel No……..

Nature of Business……..…..

Current Trade Licensee No…… Expiring date…….……

Maximum value of business which you can handle at any time: Kshs ……

Name of your Bankers……..…

Branch…….…

**Part 2 (b) – Partnership**

Give details of partners as follows:

Name in full Nationality Citizenship Details Shares

1……
2……
3……

**Part 2(c) – Registered Company:**

Private or public…….....…

State the nominal and issued capital of the Company-

Nominal Kshs…….....……

Issued Kshs…….....…

Give details of all directors as follows:

Name in full . Nationality. Citizenship Details*. Shares.

1…….....…

2.……

3.……

4.……

**Part 2(d) – Interest in the Firm:**

Is there any person / persons in KeRRA (Name of Employer)

Who has interest in this firm? Yes/No…… (Delete as necessary)

I certify that the information given above is correct.

…… …… ……
(Title) (Signature) (Date)

***** Attach proof of citizenship

## SCHEDULE OF LABOUR: - BASIC RATES

**(Reference: Clause 4 of Conditions of Particular Application)**

| LABOUR CATEGORY | UNIT (MONTH/SHIFT/HOUR) | RATES |
|---|---|---|
| | | |

Categories to be generally in accordance with those used by the Kenya Building Construction and Engineering and Allied Trades Workers' Union.

I certify that the above information is correct.

…… …… ……

*(Title)* *(Signature)* *(Date)*

## CERTIFICATE OF TENDERER'S VISIT TO SITE

This is to certify that

[Name/s] ……..……

……..……

Being the authorized representative/Agent of [Name of Tenderer]

……

……

participated in the organized inspection visit of the site of the works for the;

**…..……..**

held on ……..…… day of……20……

Name ……
(Employer's Representative)

Signed……
(Employer's Representative)

NOTE: This form is to be completed when the site visit is made

## FORM OF WRITTEN POWER-OF-ATTORNEY

The Tenderer consisting of a joint venture shall state here below the name and address of his representative who is authorized to receive on his behalf correspondence in connection with the Tender.

……
(Name of Tenderer's Representative in block letters)

……
(Address of Tenderer's Representative)

……
(Signature of Tenderer's Representative)

## KEY PERSONNEL

| DESIGNATION | NAME | NATIONALITY | SUMMARY OF QUALIFICATIONS AND EXPERIENCE |
|---|---|---|---|
| Headquarters:<br>1. Managing Director<br>2.<br>3.<br>4.<br>5.<br>etc. | | | |
| Site Office:<br><br>1. Site Supervisor<br>2.<br>3.<br>4.<br>5.<br>6 | | | |

I certify that the above information is correct.

…… …… ……..
(Title) (Signature) (Date)

## SCHEDULE OF THE PROPOSED APPROPRIATE EQUIPMENT.

Mandatory minimum number of equipment required by the Employer for the execution of the project that the bidder must make available for the Contract

| Item No. | Equipment Details | Minimum Number Required | No of Equipment Owned by the Bidder | No. of equipment to be hired |
|---|---|---|---|---|
| 1 | Pedestrian Roller – Man walk behind | 1 | | |
| | | | | |
| 2 | Double drum vibrating pedestrian roller(3Tons) | 1 | | |
| | | | | |
| 3 | Self-propelled single drum vibrating (10Tons) | 0 | | |
| | | | | |
| 4 | Mobile concrete mixers | 1 | | |
| | | | | |
| 5 | Excavator/loader/ backhoe | 1 | | |
| | | | | |
| 6 | Concrete vibrators | 1 | | |
| | | | | |
| 7 | Tippers payload 7 – 10 tonnes | 2 | | |
| | | | | |
| 8 | Flat bed lorries | 1 | | |
| | | | | |
| 9 | Water tankers (10,000 litres capacity) | 1 | | |
| | | | | |
| | | | | |
| | | | | |

The Bidder must attach certified copies of log books or lease agreement of the following.
I certify that the above information is correct.

…… …… ……..
(Title) (Signature) (Date)

## SCHEDULE OF COMPLETED CIVIL WORKS CARRIED OUT IN THE PREVIOUS YEARS

| DESCRIPTION OF WORKS AND CLIENT | TOTAL VALUE OF WORKS (KSHS) | CONTRACT PERIOD (YEARS) | YEAR COMPLETED |
|---|---|---|---|
| | | | |

I certify that the above Civil Works were successfully carried out and completed by ourselves.

…… …… ……

(Title) (Signature) (Date)

## SCHEDULE OF ONGOING PROJECTS

| DESCRIPTION OF WORK AND CLIENT | CONTRACT PERIOD | DATE OF COMMEN-CEMENT | DATE OF COMPLETION | TOTAL VALUE OF WORKS (KSHS.) | % COMPLETED TODATE |
|---|---|---|---|---|---|
| | | | | | |

I certify that the above Civil Works are being carried out by ourselves and that the above information is correct.

…… …… ……
(Title) (Signature) (Date)

## OTHER SUPPLEMENTARY INFORMATION

1. Financial reports for the last three years, balance sheets, profit and loss statements, auditors' reports etc. List them below and attach copies.
   ……
   ……
   ……

2. Evidence of access to financial resources to meet the qualification requirements. Cash in hand, lines of credit etc. List below and attach copies of supporting documents
   ……
   ……
   ……

3. Name, address , telephone, telex, fax numbers of the Tenderer's Bankers who may provide reference if contacted by the Employer.
   ……
   ……
   ……

4. Information on current litigation in which the Tenderer is involved.

| OTHER PARTY (IES) | CAUSE OF DISPUTE | AMOUNT INVOLVED (KSHS) |
|---|---|---|
| | | |

I certify that the above information is correct.

…… …… ……
Title Signature Date

## ADJUDICATOR'S AGREEMENT

Identification of Project:

……
(the "Project")

Name and address of the Employer:

……..
(the "Employer")

Name and address of the Contractor:

……..
(the "Contractor")

Name and address of the Adjudicator:

……..
(the "Adjudicator")

**Whereas** the Employer and the Contractor have entered into a Contract ("the Contract") for the execution of the Project and wish to appoint the Adjudicator to act as adjudicator in accordance with the Rules for Adjudication ["the Rules"].

**The Employer, Contractor and Adjudicator agree as follows:**

1. The Rules and dispute provisions of the Contract shall form part of this Agreement.

2. The Adjudicator shall be paid:

   A retainer fee of ……..…….. per calendar month (where applicable)

   A daily fee of ……..…

Expenses (including the cost of telephone calls, courier charges, faxes and telexes incurred in connection with his duties; all reasonable and necessary travel expenses, hotel accommodation and subsistence and other direct travel expenses).

Receipts will be required for all expenses.

3. The Adjudicator agrees to act as Adjudicator in accordance with the Rules and has disclosed to the Parties any previous or existing relationship with the Parties or others concerned with the Project.

4. This Agreement shall be governed by the laws of……
5. The Language of this Agreement shall be ……..

SIGNED BY ……

For and on behalf of the Employer in the presence of

Witness ……..
Name ……..
Address ……..
Date ……..

SIGNED BY ……

For and on behalf of the Contractor in the presence of

Witness ……..
Name ……..
Address ……..
Date ……..

SIGNED BY ……

For and on behalf of the Adjudicator in the presence of

Witness ……..
Name ……..
Address ……..
Date ……..

## FRAUD & CORRUPTION

1 If the Employer determines that the Contractor has engaged in corrupt, fraudulent, collusive, coercive or obstructive practices, in competing for or in executing the Contract, then the Employer may, after giving 14 days notice to the Contractor, terminate the Contractor's employment under the Contract and expel him from the Site.

2 Should any employee of the Contractor be determined to have engaged in corrupt, fraudulent, collusive, coercive, or obstructive practice during the execution of the Works, then that employee shall be removed.

3 For the purposes of this Sub-Clause:

(i) "corrupt practice" is the offering, giving, receiving or soliciting, directly or indirectly, of anything of value to influence improperly the actions of another party;

(ii) "fraudulent practice" is any act or omission, including a misrepresentation, that knowingly or recklessly misleads, or attempts to mislead, a party to obtain a financial or other benefit or to avoid an obligation;

(iii) "collusive practice" is an arrangement between two or more parties designed to achieve an improper purpose, including to influence improperly the actions of another party;

(iv) "Coercive practice" is impairing or harming, or threatening to impair or harm, directly or indirectly, any party or the property of the party to influence improperly the actions of a party.

4 The Contractor declares that:

a) They did not engage in any action to influence the Project implementation process to the detriment of the Employer, in particular no collusive practice took place nor will take place, and

The bidding proceedings, contract award, and execution have not and will not be subject to any corrupt practice as defined in the United Nations Convention to combat corruption dated 31 October 2003.

Dated this _____ day of _____20_____

Signature _____in the capacity of_____

duly authorized to sign Tenders for and on behalf of

_____[Name of Tenderer] of

_____[Address of Tenderer]

_____[Seal or Stamp of Tenderer]

## ENVIRONMENTAL AND SOCIAL COMMITMENT

I have taken due note of the importance to comply with environmental and social standards and regulations.

I, the undersigned, […….] acting as the duly authorized representative of […….],

With respect to the submission of a bid for [……] in accordance with the invitation to tender No [……], I undertake to comply, and ensure that our subcontractors, if any, comply with international environmental and labour standards consistent with applicable law and regulations in the country of implementation of the Project, including the fundamental conventions of the International Labour Organisation (ILO) and international environmental treaties

In addition, I also undertake to adopt any environmental and social risk mitigation measures as defined in the environmental and social management plan or the notice of environmental and social impact issued by the Employer.

Dated this _____ day of _____20_____

Signature _____in the capacity of_____

duly authorized to sign Tenders for and on behalf of
_____[Name of Tenderer] of

_____[Address of Tenderer]

_____[Seal or Stamp of Tenderer]

**FORM RB 1**

**REPUBLIC OF KENYA**
**PUBLIC PROCUREMENT ADMINISTRATIVE REVIEW BOARD**

APPLICATION NO……OF……20……...

BETWEEN

…….APPLICANT

AND

……RESPONDENT (Procuring Entity)

Request for review of the decision of the…… (Name of the Procuring Entity) of ……dated the…day of ……20…….in the matter of Tender No……..…of ……..20…

**REQUEST FOR REVIEW**

I/We……,the above named Applicant(s), of address: Physical address…….Fax No……Tel. No……..Email ……, hereby request the Public Procurement Administrative Review Board to review the whole/part of the above mentioned decision on the following grounds , namely:-

1.
2.
etc.

By this memorandum, the Applicant requests the Board for an order/orders that: -

1.
2.
etc

SIGNED ……(Applicant)

Dated on…….day of ……/…20…

**FOR OFFICIAL USE ONLY**

Lodged with the Secretary Public Procurement Administrative Review Board on …… day of ……...20……

SIGNED
Board Secretary

# DECLARATION FORM

Date _____

To _____
_____
_____

The tenderer i.e. (Name and address)_____

_____declare the following:

a) Has not been debarred from participating in public procurement.

b) Has not been involved in and will not be involved in corrupt and fraudulent practices regarding public procurement.

_____ _____ _____
Title Signature Date

(To be signed by authorized representative and officially stamped)

# SECTION VIII: SPECIFICATIONS, DRAWINGS AND BILLS OF QUANTITIES

## ROUTINE MAINTENANCE - SPECIFICATIONS

**CONTENTS:**

**SPECIFICATIONS FOR ROUTINE MAINTENANCE WORKS…… A-3**

STANDARD SPECIFICATION…… A-3

SECTION 01 PRELIMINARY AND GENERAL ITEMS…… A-4
01-40-001 Mobilisation, Establishment and Demobilisation from Site…… A-4
01-40-002 Clearance on Completion…… A-4
01-40-006 Traffic Control…… A-4
01-40-007 Drinking Water…… A-5
SECTION 04: ROADSIDE CLEARANCE…… A-5
04-50-002 Grass Cutting (Manual)…… A-5
04-50-003 Bush Clearing - Heavy…… A-6
04-50-004 Bush Clearing - Light…… A-6
04-50-008 Clearing of Obstructions…… A-6
04-50-005 Pruning Tree Branches…… A-6
SECTION 05: EARTHWORKS…… A-7
05-70-001 Grassing …… A-7
SECTION 08: CULVERT AND DRAINAGE WORKS…… A-8
08-50-002 Ditch Cleaning (Manual)…… A-8
08-60-001/2/3/4/5 Culvert Cleaning (Partially blocked)…… A-9
08-60-001 300 mm dia…… A-9
08-60-002 450 mm dia…… A-9
08-60-003 600 mm dia…… A-9
08-60-004 900 mm dia…… A-9
08-60-005 1200 mm dia…… A-9
08-60-006/7/8/9/10 Desilting Culverts/Structures inlet/outlets (Fully blocked)…… A-10
08-60-006 300 mm dia…… A-10
08-60-007 450 mm dia…… A-10
08-60-008 600 mm dia…… A-10
08-60-009 900 mm dia…… A-10
08-60-010 1200mm dia…… A-10
08-70-001 Headwall Repair Masonry…… A-10
08-70-002 Headwall Repair - Concrete…… A-11
08-70-008 Scour Check Repair - masonry …… A-11
08-70-009 Scour Check Repair - wooden…… A-11
08-70-010 Scour Check Repair - concrete…… A-11
08-70-011 Stone Pitching Repair…… A-11
08-80-004 Drift Maintenance - desilting…… A-12
08-80-005 Drift Repairs - Concrete…… A-13
SECTION 10: CARRIAGEWAY REPAIR WORKS…… A-13
10-50-006 Light Manual Reshaping (Potholes, Ruts and Gullies…… A-13
10-50-009 Light Manual Reshaping (Grub edge and Reshape carriageway… A-14
SECTION 11: SHOULDER MAINTENANCE AND REPAIR…… A-16
11-50-001 Shoulder Grading……

A-16
SECTION 15: PAVED CARRIAGEWAY MAINTENANCE…… A-17
15-50-001 Pothole Patching - hot mix…….. A-17
15-50-002 Pothole Patching - cold mix…… A-17
15-50-004 Road Edge Repairs…… A-18
15-60-001 Spot Sealing – (Fine Cracks)…….. A-18
15-60-002 Crack Sealing……. A-19
15-80-001/005 Base Repairs……..
A-19
SECTION 17: BRIDGE MAINTENANCE……. A-22
17-50-001 Cleaning and Clearing Deck……. A-22
17-50-002 Cleaning and Clearing – Riverbed…… A-22
SECTION 20: ROAD FURNITURE REPAIR AND MAINTENANCE……. A-23
20-50-001 Traffic Sign Maintenance…… A-23
20-50-003 Guardrail Repair……..
A-24
20-50-004 Marker Posts Replacement…… A-24
20-50-006 Sign Cleaning and Repairing……. A-24
SECTION 25: HIV/AIDS AWARENESS AND PREVENTION CAMPAIGN……. A-25
25-50-001 HIV/AIDS Awareness Campaign…….. A-25
25-50-002 Aids Prevention Campaign……... A-25

## SPECIFICATIONS FOR ROUTINE MAINTENANCE WORKS

### Standard Specification

Whenever reference is made to “The Engineer” in the specification, it shall be construed to be synonymous with “Employer’s duly authorised Representative” as referred to in the Conditions of Contract.

## SECTION 01 : PRELIMINARY AND GENERAL ITEMS

Scope:

This section refers to those items that are needed at the start and end of the Works or are provisional items applicable for the duration of the Works.

### 01-40- 001: Mobilization and Establishment of Site

The Contractor shall provide all equipment, tools, material and temporary stores required to carry out the required Works.

The Contractor shall ensure that all possible means of protection are given to the staff at all times. Such protection shall include provision of high visibility clothing or vests for the workforce, in potentially dangerous locations. The Contractor shall also maintain first aid kits with items included on the advice of the local Medical Officer, or as directed by the Engineer.

Measurement and Payment

No separate payment shall be made for this item. The Contractor shall include the costs in the other rates for other measured items.

### 01-40-002 Clearance on Completion

On Completion of the Works, all temporary stores, equipment, signs and tools shall be removed from the site, and the Site left in good order to the satisfaction of the Engineer.

Measurement and Payment

The Lump Sum payment shall be made upon the approval of the Engineer that the Clearance has been satisfactorily carried out.

### 01-40-006 Traffic Control

The Contractor shall provide warning signs, fences, barriers, detours, which shall be properly positioned well in advance so that all traffic is well and safely accommodated for the duration of the Works.

Traffic signs and other traffic control facilities shall be kept in good condition and located in positions where they are visible to road users.

Work Method
The Contractor shall use **Labour** to carry out this item of work

Quality Control

The Engineer shall check regularly that traffic control measures are satisfactory.

Measurement and Payment

A Lump Sum shall be paid on a Monthly basis upon the approval of the Engineer that adequate Traffic Control is in place

## 01–40–007 Drinking Water

The Contractor shall provide safe drinking water on site for workers at a reasonable distance from all work locations, for the duration of the Works.

Quality Control

The Engineer shall check regularly that adequate supplies of water are available throughout the Site.

Measurement and Payment

A Lump Sum shall be paid on a Monthly basis upon the approval of the Engineer that adequate supplies have been provided.

## SECTION 04: ROADSIDE CLEARANCE

Scope

This section covers all routine maintenance works within the road reserve and includes items such as bush clearing, pruning of tree branches, grass cutting, and removal of litter and any other debris.

### 04–50–002: Grass Cutting (Manual)

Grass shall be defined as any form of plant growth including small shrubs having a girth of not more than 100mm measured at height of 200mm above ground level.

The grass shall be cut to height of not more than 50 mm above the ground. The width limits shall be as instructed by the Engineer. All cut grass shall be removed from the carriageway, side drains, mitre drains and inlets and outlet drains of structures/culverts and deposited in approved spoil dumps

**EA Burning of the grass shall not be allowed and care shall be taken not to damage roadside fixtures such as signs and marker posts.**

This activity shall be carried out twice, each time before the rainy season or as shall be instructed by the Engineer.

Work Method

The Contractor shall use **Labou**r to carry out this item of work.

Quality Control

The road width for grass cutting shall be measured at 50-m intervals and shall be free of grass after the operation.

Measurement: $m^2$

The measurement shall be area of grass cut, based on the standard width and measured length of clearing.

Payment

The unit rate shall be full compensation, for labour, materials, tools, and incidental costs required to carry out the work.

**04-50-003 Bush Clearing - heavy**
**04-50-004 Bush Clearing - light**
**04-50-005 Pruning Tree Branches**

This activity involves the removal of small trees, shrubs and bushes all including their root systems, In addition, the Engineer may order the trimming of branches of large trees to improve visibility. The width limits shall be as instructed by the Engineer.

The cut material shall be collected into heaps away from the side drains and where it shall not block or interfere with visibility.

The burning of cut bush and removed trees or branches shall not be allowed.

*Work Method*

The Contractor shall use **Labour** to carry out this item of work

Quality Control

The width for bush clearing shall be measured at 50-m intervals and shall be free of trees or bushes.

Measurement Unit: $m^2$

The measurement shall be the area cleared according to the specified widths and measured length of clearance.

Payment

The unit rate shall be the full compensation, for labour, materials, tools, and incidental costs required to carry out the work.

**04–50–008: Clearing of Obstructions**

This activity shall involve the following tasks:-

- Inspection of the road section(s) regularly
- Removal of all obstructions such as fallen trees/ branches, rock fall, landslides and broken signs away from the road, side drains, mitre drains and other drains, inlets and outlets of drifts, culverts and other structures and the safe disposal thereof outside the road formation width.
- Removal of dead animals' carcasses away for the carriageway and disposing of them as directed by the Engineer. Liaison with the Police may be necessary.

Work Method

The Contractor shall use **Labour** to carry out this item of work

Quality Control
The road section shall be free of any obstruction.

Measurement Unit: Provisional Sum
The measurement for this item shall be a Provisional Sum paid as necessary on a Dayworks basis.

Payment
The unit rate shall be the full compensation for the provision of labour, tools and incidental costs necessary to carry out the tasks.

## SECTION 05: EARTHWORKS

### 05-70- 001: Grassing

This activity involves the protection / repair of erosion on embankment slopes, cut faces, shoulders, and side slopes by filling with suitable soils and compacting using appropriate tamping tools as instructed by the Engineer.

The Contractor shall plant sprigs of approved indigenous 'runner' type grass. The Contractor shall care for and water the grass until it is firmly established.

Work Method

The Contractor shall use **Labour** to carry out this item of work.

Quality Control

- The width of the slope shall be measured at 50m intervals and shall have maximum tolerances of + / - 100mm.
- The quality of grass and spacing of the sprigs shall be as directed by the Engineer

Measurement Unit $m^2$

The unit of measurement shall be area calculated as the net area, measured on the slope.

Payment

The unit rate shall be full compensation, for labour, materials, tools, and incidental costs required to carry out the work.

## SECTION 08: CULVERT AND DRAINAGE WORKS

### Scope:

This section covers all routine maintenance of the drainage system including the cleaning or desilting of the side drains, mitre drains, catch water drains, culverts, inlets and outlets, and scour checks.

**08-50-002 Ditch Cleaning (Manual) - Partially Silted**
**08-50-003 - Fully Silted**

i. Partially silted

Partially silted drains are those that are less than half silted and require only cleaning.

All deposited material, debris, and vegetation shall be removed and the drain shaped to the original cross-section and left in a free-draining condition. Suitable material may be used to fill depressions and potholes on the carriageway. All debris and other unsuitable material removed from the side drains shall be disposed of well clear of the drainage system in approved spoil dumps where it will not cause any obstruction or be washed back.

The side drains, mitre drains and catchwater drains shall be cleaned before the onset of the rains or as directed by the Engineer.

Work Method

The Contractor shall use **Labour** to carry out this item of work

Quality Control

- Appropriate drain templates shall be used to check and control the dimensions of the drains.
- The longitudinal profile of the drains shall be checked using boning rods, to ensure free flow.

Measurement Unit: m

The measurement shall be the length of drain desilted or cleaned to the specified cross-section.

Payment

The unit rate shall be full compensation, for labour, tools, and incidental costs required to carry out the work.

ii. Fully silted

Fully silted drains shall be those that are greater than half-silted and require re-excavation or reshaping.

All deposited material, debris, and vegetation shall be removed and the drain shaped to the original cross-section and left in a free-draining condition. Suitable material may be used to fill depressions and potholes on the carriageway. All debris and other unsuitable material removed from the side drains shall be disposed of well clear of the drainage system in approved spoil dumps where it will not cause any obstruction or be washed back.

The side drains shall be desilted or re-excavated before the onset of the rains, or as directed by the Engineer.

*Work Method*

The Contractor shall use **Labour** to carry out this item of work

*Quality Control*

- Appropriate drain templates shall be used to check and control the dimensions of the drains.
- The longitudinal profile of the drains shall be checked using boning rods, to ensure free flow.

Measurement Unit: $m^3$

The measurement shall be the volume of drain re-excavated or re-shaped to the specified cross-section.

Payment

The unit rate shall be full compensation for labour, tools, and incidental costs required to carry out the work.

**08- 60 - 001/2/3/4/5: Culverts Cleaning (Partially blocked)**

08 - 60 - 001 300mm dia;
08 - 60 - 002 450mm dia;
08 - 60 - 003 600mm dia;
08 - 60 - 004 900mm dia;
08 - 60 - 005 1200mm dia

This activity involves the cleaning of culverts of specified sizes including pipe barrels, the outlet/inlet structures, and the outlet drains, keeping them free of all debris, weed, silt and any obstruction to ensure free passage of water at all times. The debris shall be deposited in approved spoil dumps as directed by the Engineer

Partially blocked culverts shall be those with less than half of the barrel blocked.

Correct widths and slopes of the outlet drains shall be maintained. The gradient of the outlet drain shall be not less than 2 %.

All broken culvert barrels discovered in the course carrying out this activity shall be reported to the Engineer.

This activity shall be carried out before the rains, or as directed by the Engineer.

Work Method

The Contractor shall use **Labour** to carry out this item of work

*Quality Control*

The culverts shall be checked as free of debris to the satisfaction of the Engineer.

Measurement Unit: **m**

The measurement shall be the length of culvert, including the outlet drain, cleaned

Payment

The unit rate shall be full compensation for labour, tools and incidental costs required to carry out the work.

**08- 60 - 006/7/8/9/10 : Culvert Cleaning (Fully blocked):**

08 - 60 - 006 300mm dia;
08 - 60 - 007 450mm dia;
08 - 60 - 008 600mm dia;
08 - 60 - 009 900mm dia;
08 - 60 - 010 1200mm dia

This activity involves the cleaning of culverts of specified sizes including pipe barrels, the outlet/inlet structures, and the outlet drains, keeping them free of all debris, weed, silt and any obstruction to ensure free passage of water at all times. The debris shall be deposited in approved spoil dumps as directed by the Engineer

Fully blocked culvert shall be those with greater than half of the barrel blocked.

Correct widths and slopes of the outlet drains shall be maintained. The gradient of the outlet drain shall be not less than 2 %.

All broken culvert barrels discovered in the course of carrying out this activity shall be reported to the Engineer.

This activity should be carried out before the onset of the rains, or as directed by the Engineer.

Work Method

The Contractor shall use **Labour** to carry out this item of work.

*Quality Control*

The culverts shall be checked as free from debris, to the satisfaction of the Engineer.

Measurement Unit: m

The measurement shall be the length of culvert, including the outlet drain cleaned.

Payment

The unit rate shall be full compensation for labour, tools and incidental costs required to carry out the work.

**08- 70- 001: Head Wall Repair - Masonry**

This activity involves the repairs to damaged head walls and wing walls built in masonry.

Where directed by the Engineer, the masonry walls shall be inspected and loose or missing stone re-secured or replaced. Damaged pointing shall be repaired with cement mortar 1:4 and finished flush with the stonework.

Work Method

The Contractor shall use **Labour** to carry out this item of work

*Quality Control*

- The stability of the walls and the pointing shall be to the satisfaction of the Engineer.

Measurement Unit: No

The measurement shall be the number of walls repaired as directed by the Engineer.

Payment

The unit rate shall be full compensation for labour, materials, tools, and incidental costs required to carry out the work.

**08-70-002 Headwall Repair - Concrete**

The activity involves the repairs to damaged concrete headwalls and wingwalls, and to inlet/outlet concrete aprons. Concrete walls shall be inspected and repair works carried out as instructed by the Engineer to include breaking out and replacement of damaged concrete with similar material, and the rendering of open texture areas with cement mortar 1:4. Broken wall sections shall be re-built in 20/20 (1:2:4) concrete within formwork erected on the correct lines and levels in accordance with the Standard Drawings. Areas of new concrete and mortar shall be protected from direct sunlight and kept moist for 3 days.

Quality Control

The work shall be carried out to the satisfaction of the Engineer.

Measurement Unit: No

The measurement shall be the number of walls/aprons repaired.

Payment

The unit shall be full compensation for labour, materials, tools, and incidental costs required to carry out the work.

**08 - 70 - 008: Scour Check Repair - masonry**
**08 - 70 - 009: Scour Check Repair - wooden**
**08 - 70 - 010: Scour Check Repair - concrete**

This activity involves the repair of Scour Checks using stones or wooden stakes or concrete. The construction details shall be shown in the Drawings or as instructed by the Engineer.

Scour checks shall be inspected and the repairs carried out as directed by the Engineer, which shall include replacement of missing or broken stonework and stakes; and the repair of damaged concrete, to the original lines, levels, and Specifications.

*Work Method*

The Contractor shall use **Labour** to carry out this item work.

Quality Control

**EB**
The sizes of the stakes and stones used shall be as the original construction.
The shape of the scour check shall be checked using the scour check template.

Measurement: No.

The unit rate of measurement shall be the number of scour checks repaired.

Payment

The unit rate shall be full compensation, for labour, tools, materials, and incidental costs required for carrying out the work.

**08- 70- 011 Stone Pitching Repair**

This activity involves the repair of stone pitching on slopes, in inlet/outlet aprons and access drifts. The stone pitching shall be inspected and repairs carried out as directed by the Engineer, including the replacement and re-bedding of missing or loose stones; the repair of mortar jointing: and the cleaning out of weepholes, as required. All work shall be to the lines and levels of the original construction with new stonework and mortar being flush with the adjacent materials.

Work Method

The Contractor shall use **Labour** to carry out this work

*Quality Control*

The work shall be carried out to the satisfaction of the Engineer.

Measurement Unit: $m^2$

The measurement shall be the net surface area of the repairs.

Payment

The unit rate shall be full compensation, for labour, tools, materials, and incidental costs required to carry out the work.

### 08- 80- 004 Drift Maintenance – desilting

This activity involves the removal of debris, silt and any vegetation from drifts and causeways. The debris shall be deposited away from the drift in approved spoil dumps.

This activity shall be carried before the rains, or as directed by the Engineer.

Work Method

The Contractor shall use **Labour** to carry out this item of work

*Quality Control*

The work shall be carried out to the satisfaction of the Engineer.

Measurement Unit: $m^3$

The measurement shall be the volume of debris or silt removed calculated as the product of length , width and measured depth of the affected section of drift.

Payment

The unit rate shall be full compensation for labour, tools, and incidental costs required to carry out the work.

### 08-80-005 Drift Repairs – Concrete

This activity involves the repair of concrete drifts, including the removal of loose or broken concrete, cutting back damaged areas to sound surfaces and repairing with concrete of similar Class to the original.

The drift shall be inspected and necessary repairs shall be instructed by the Engineer. Holes and voids shall be cleared of debris, loose material and dust, and shall be well watered before the new concrete is placed. The new concrete shall be firmly rammed against the existing surfaces and finished flush with the surrounding materials. The surface of the repair shall be protected from direct sunlight and kept moist for 3 days. Concrete shall be Class 20/20 unless otherwise directed by the Engineer.

Quality Control

The work shall be carried out to the satisfaction of the Engineer.

Measurement Unit: $m^3$

The measurement shall be the volume of concrete used for the repair.

Payment:

The unit rate shall be the full compensation for labour, tools, materials and incidental costs required to carry out the work.

## SECTION 10: CARRIAGEWAY REPAIR WORKS (GRAVEL)

Scope:

This section covers all routine maintenance works on the gravel carriageway and includes items such as pothole patching, and reshaping of the carriageway, using labour.

### 10- 50- 006 Light Manual Reshaping (Potholes, Ruts and Gullies)

Description:

This activity involves the removal of all unsuitable/degraded material from the pothole, rut or gully until firm ground is reached, and filling with approved material and ensuring that the area is free draining.

For earth roads material from the side drains may be used.

For gravel roads the gravel shall be obtained from the stacks placed at intervals along the road for this purpose.

The fill material shall be watered, mixed and compacted using suitable tampers to a finished level 25mm above the surrounding road surface.

This activity shall be carried out before and after the rains, or as directed by the Engineer.

Work Method

The Contractor shall use **Labour** to carry out this work

Quality Control

- The quality of fill material shall be approved by the Engineer
- The minimum compaction to be applied shall be such that no rammer imprint on the surface shall be seen.

Measurement Unit: $m^3$

The measurement shall be total volume of materials used for the repairs.

Payment

The unit rate shall include full compensation for labour, tools, materials, and incidental costs necessary to carry out the work.

### 10- 50- 009: Light Manual Reshaping (Grub edge and Reshape Carriageway)

Description:

This activity involves trimming the edge of the carriageway, grubbing grass from the carriageway and reshaping of the camber of the road to the original standard and shape. No grass shall be grubbed from the shoulders, but it

shall be cut to a maximum height of 50mm.

For earth roads materials from the side drains may be used to reshape the carriageway. Where additional suitable material is required to reinstate the camber to the required shape, this material shall be obtained from approved sources nearest to the final deposition area.

*Work Method*

The Contractor shall apply **Labour** methods to carry out this item.

*Quality Control*

- The width of the carriageway including the shoulders shall be checked at 100m intervals with tolerance of +50mm or -20mm
- The camber shall be checked using camber board at 50m intervals and shall have a tolerance of +/- 1%

*Measurement Unit:* $m^2$

The measurement shall be the area of carriageway shaped.

*Payment*

The unit rate shall be the full compensation for labour, tools and incidental costs required for carrying out the work.

## SECTION 11: SHOULDER MAINTENANCE AND REPAIR

### 11-50-001: Shoulder Grading

Where directed by the Engineer the Contractor shall reinstate or re-form the shoulders of the road using either a Towed or Motor grader.

Pegs 400 to 500mm long shall be placed at 10 to 20 m intervals on the edge of the carriageway. Suitable material from the front slope of the side drain shall be bladed and spread on the shoulders (and, if appropriate the carriageway), unless otherwise directed by the Engineer, and the shoulders re-formed to the cross-section dimensions, as shown in Table 10.2. Compaction shall be achieved with the wheels of the equipment used, or by other approved means.

Table 10.2: Overall width ditch

| **Road Category** | **Carriageway width** | **Overall width to front of Ditches** |
|---|---|---|
| A/B/C + Secondary Roads | 6.0 m | 8.4 m |
| D/E + Minor Roads | 5.4 m | 7.8 m |
| RAR Roads | 4.5 m | 6.5 m |
| Minor/RAR roads with insufficient widths or Temporary | 3.5 m | 5.5 m |

Work Method

The Contractor shall use Equipment to carry out this item.

Measurement Unit: km

The measurement shall be the length of shoulder reformed.

Payment

The unit rate shall be the full compensation for labour, tools, equipment and incidental costs required for carrying out the work.

## SECTION 15: PAVED CARRIAGEWAY MAINTENANCE

### 15 – 50 – 001: Pothole Patching - hot mix
### 15 – 50 – 002: Pothole Patching - cold mix

This activity involves the repair of potholes, which have developed on the surface of paved roads where there is no evidence of base failure. Potholes shall be defined as local failures usually round or oval in shape covering less than 4.0 sq. m and less than 100mm in depth. Repair of larger areas shall be defined as surface repairs.

The areas to be repaired shall be marked out into rectangular shapes. All failed areas shall be cut back to sound road material. The hole shall extend to the bottom of the base layer, and the sides shall be cut to form a vertical face. All unsuitable material shall be removed and deposited away from the road to the approval of the Engineer.

A prime coat of 60% cationic spray grade emulsion, shall be applied on all the sides and on the bottom of the prepared hole

Premixed bituminous material, similar to the existing surfacing shall be placed in the hole and compacted in two or more layers of regular thickness depending on the depth involved.

The final layer, prior to compaction, shall be overfilled by 20% of its depth. Compaction shall be carried out using a pedestrian vibrating roller, plate compactor or hand rammer as appropriate until the surface is level, with the surrounding material.

A minimum depth of 50mm shall be provided for the cationic premix bituminous backfill.

Premix proportions shall be as follows:

| | |
|---|---|
| - Sand | 38% |
| - 6.7mm aggregate | 57% |
| - Bitumen emulsion | 5% (bitumen content 60-65%) |

Work Method

The Contractor shall use **Labour** and **Equipment** to carry out this item.

Quality Control

- The quality of the repair material shall be to the approval of the Engineer.
- The patch shall be checked using a straight edge and shall be flush with other parts of the carriageway
- Compaction of the patch shall be checked such that no imprint of the compaction equipment is visible.

Measurement Unit: $m^3$

The unit of measurement shall be the volume of material used in the repair.

Payment

The unit rate for this item shall include the full compensation, labour, tools, materials , equipment and incidental costs required to carry out the work.

## 15 – 50 – 004: Road Edge Repairs

This activity involves the repair to the edges of paved carriageways, including the rebuilding of pavement layers and the shoulders.

All soft material along the surface edge shall first be removed. The pavement layers shall be rebuilt and thoroughly compacted, in similar materials to the existing pavement. The pavement shall be similarly rebuilt against sound material of the existing pavement, and thoroughly compacted. The top of the compacted fill shall be between 30mm to 50mm below the estimated new surface level.

A trench (100 mm wide x 100mm deep) shall be dug along the surface edge in order to reinforce the new edge. The trench shall be swept clean of all loose material and primed with bitumen emulsion.

A trench shall be filled with cold premix and compacted in layers of a 50mm maximum thickness, finishing flush with the existing surface and maintaining the cross fall. The repaired edge shall be finished off by sheet patching with a light sand layer to absorb surplus bitumen.

Work Method
The Contractor shall use **Labour** and **Equipment** to carry out this item.

Quality Control

- The edge repair shall be checked using straight edge to be flush with other parts of the carriageway
- Compaction of the edge repair shall be such that no imprint of the compaction equipment is visible.

Measurement Unit: $m^2$

The measurement shall be the area of the repair including the bituminous edge and shoulder.

Payment

The unit rate shall be full compensation for labour, tools, materials, equipment, and incidental costs required to carry out the work.

## 15 – 60 – 001 Spot Sealing - (Fine cracks)

This activity involves the repair of alligator cracking (maximum width 3mm) on the carriageway. The area to be sealed shall be marked in chalk and be clean and dry. The bituminous binder shall be as specified by the Engineer and shall be applied with a spray lance or other approved method. Distribution rates shall be 1.5kg/$m^2$ for bitumen emulsion.

Coarse sand, up to 5mm, shall then be spread over the whole surface.

Crack sealing shall be carried out during the warm and dry weather.

Work Method
The Contractor shall use **Labour** and **Equipment** to carry out this item.

Quality Control

- The quality of the repair work shall be to the approval of the Engineer.
- The area of spot sealing shall be checked to be free of cracks.

Measurement Unit: $m^2$

The measurement for this item will be the area of fine cracks repaired.

Payment

The unit rate shall include full compensation for materials, labour, tools, equipment, and incidental costs required to carry out the work.

**15-60-002 Crack Sealing**

This activity covers the repair of transverse or longitudinal cracks wider than 3mm on the surface of a surface dressed or bituminous carriageway or shoulder.

The cracks and the surrounding road surface shall be clean and dry. The cracks shall be filled with hot cut back bitumen.

The bitumen shall be distributed using a watering can and shall follow the line of the crack, with the nozzle or spout held close to the road surface, keeping the width of the spread as narrow as possible. Coarse sand, up to 5mm, or crusher dust shall be spread over the strip of the binder.

All crack sealing shall be carried out during the warm and dry weather.

Work Method

The Contractor shall use **Labour** and **Equipment** to carry out this item.

Quality Control

- The sealing shall be carried out to the satisfaction of the Engineer.
- The area of sealing shall be checked to be free of cracks.

Measurement Unit: m

The measurement shall be the length of cracks sealed.

Payment

The unit rate shall include full compensation for materials, labour, tools and incidental costs required to carry out the work.

**15 – 80 – 001 to 005 Base repairs**

This activity involves the repair of localised failures of the pavement layers, including the removal of the deformed areas and reconstructing the pavement and surfacing layers including treatment of the bottom of the excavation prior to backfilling.

The areas to be repaired shall be marked and cut out into rectangular shapes. All failed area shall be cut back to sound road material. The sides shall be dressed so that they are at $60^{o}$ to the horizontal, and the bottom of the hole shall be compacted to a density of 93 % AASHTO T180. All unsuitable material shall be removed and deposited away from the road as directed by the Engineer.

For a bituminous base a prime coat of 60% cationic spray grade emulsion shall be applied to all vertical surfaces and on the bottom of the prepared hole.

The material for the base repair shall be graded crushed stone, dense bitumen macadam or neat gravel, according to the original base material, and shall be compacted in layers as directed by the Engineer.

**15-80-001: Graded Crushed Stone**

"Graded crushed stone" shall be crushed stone with a smooth grading curve, which is within the specified envelope. The stone class shall be given in the special Specifications or as directed by the Engineer.

Work Method

The Contractor shall use **Labour** and **Equipment** to carry out this item of work.
Quality Control

- The repair shall be carried out to the approval of the Engineer.
- The repair shall be checked with a straight edge and shall be flush with other parts of the carriageway laterally and longitudinally.
- Compaction of the patch shall be checked such that no imprint of the compaction equipment is visible

Measurement Unit $m^3$

The measurement shall be the volume of graded crushed stone compacted in the repair measured in-site.

Payment

The unit rate for this item shall include the full compensation for the materials, tools, labour, equipment and incidental costs, required to carry out the work.

**15-80-002: Dense Bitumen Macadam**

Dense bitumen macadam shall be a hot-mixed, hot-laid plant mixture of well-graded aggregate and penetration grade bitumen, as specified for road-base material.

Work method
The Contractor shall use **Labour** and **Equipment** to carry out this item.
Quality Control

- The repair shall be carried out to the approval of the Engineer
- The repair shall be checked with a straight edge and shall be flush with other parts of the carriageway laterally and longitudinally.
- Compaction of the patch shall be checked such that no imprint of the compaction equipment is visible.

Measurement Unit: $m^3$

The measurement shall be the volume of dense bitumen macadam compacted on the road measured in- situ.

Payment

The unit rate for this item shall include the full compensation for the materials, tools, labour, equipment, and incidental costs required to carry out the work.

**15-80-005: Neat Gravel**

"Gravel " includes lateritic gravel, quartzitic gravel, calcareous gravel, soft stone, coral rag, clayey sands, decomposed rock, crushed rock or a combination of any of these materials.

Work method
The Contractor shall use **Labour** and **Equipment** to carry out this item of work
Quality Control

- The repair shall be carried out to the approval of the Engineer.
- The repair shall be checked with a straight edge and shall be flush with other parts of the carriageway laterally and longitudinally.
- Compaction of the patch shall be checked such that no imprint of the compaction equipment shall be visible.

Measurement Unit: $m^3$

The measurement shall be the volume of gravel compacted on the road measured in-situ.

Payment

The unit rate for this item shall include the full compensation for the materials, labour, tools, equipment, and incidental costs required to carry out the work.

## SECTION 17: BRIDGE MAINTENANCE

### 17 - 50 - 001: Cleaning and Clearing - Deck

### 17 - 50 - 002: Cleaning and Clearing - Riverbed

Description

This activity involves the following tasks,

- Brooming of the deck and sidewalks to clear all loose soil, dirt, aggregate, debris, and removal of the same from site
- Removal of all dirt and stones lodged between deck planking
- Clearance of weep holes of dirt and debris
- Removal of all dirt and debris in joints between beams and abutments or any point under bridge
- Removal of debris lodged at pier and abutments or any point under the bridge
- Removal of trees and bushes growing under the bridge and directly upstream and downstream and disposing the material away from the bridge and stream
- Cleaning of any signs or reflectors on or at the bridge.
- Removal of termites tunnels in the vicinity of timber bridges and soaking the ground with chemical solutions against wood destroying insects.

*Work Method*

The Contractor shall use **Labour** to carry out this item.

*Quality Control*

- The bridge deck shall be checked to be clean and free of dirt and debris
- The passage below the deck shall be checked to be free of obstructions

Measurement Unit: Provisional Sum

The measurement of work shall be on a Dayworks basis.

Payment

Payment shall be made for the labour and material instructed by the Engineer to be used on the work.

## SECTION 20: ROAD FURNITURE REPAIR AND MAINTENANCE

### 20-50- 001: Traffic Sign Maintenance

This activity involves all the tasks required to ensure that the road signs and signposts are in a clean, properly aligned, vertical and secure condition; the replacement of missing or broken bolts, nuts or other fixings and the tightening of the same. The maintenance shall also extend to securing any loose posts by the re-compacting or removal of any unsuitable material surrounding the posts, importing and compacting of suitable material to render the post secure.

*Work Method*

The Contractor shall use **Labour** to carry out this item.

*Quality Control*

- The signs shall be clean and in vertical position
- The fixings shall be hand checked to be tight

Measurement Unit: No.

The measurement shall be number of signs maintained.

Payment

The unit rate shall be the full compensation for labour, tools, material and incidental costs required to carry out the work.

### 20-50- 003: Guardrail Repair

This activity involves the repair of Guardrails (including rails, posts and fixings) to a properly aligned, vertical and secure condition. The repair shall include securing any loose posts by re-compaction or removal of any unsuitable material surrounding the post, importing and compaction of suitable materials to render the posts secure, and the re-fixing of the rails.

*Work Method*

The Contractor shall use **Labour** to carry out this item.

*Quality Control*

- The guardrails shall be checked as being properly aligned secure and in a vertical position
- The fixings shall be hand checked to be firmly fixed

Measurement Unit: m

The measurement shall be the length of Guardrail repaired

Payment

The unit rate shall be the full compensation for labour, material, tools, and incidental costs required to carry out the work.

## 20- 50- 004: Marker Posts Replacement

This activity involves the replacement of kilometre stones and culvert marker posts

The Engineer shall determine the location of the marker stones and posts. They shall be set in a simple excavation and backfilled with soil. The depth of the excavation shall be determined on the site, depending on the size and shape of the marker stone or post.

*Work Method*

The Contractor shall use **Labour** to carry out this item.

*Quality Control*

- The posts shall be vertical and firmly bedded to the approval of the Engineer

Measurement Unit: No

The measurement shall be in number of marker posts.

Payment

The unit rate shall be the full compensation for labour, tools, posts, materials and incidental costs required to carry out the work.

## 20-50-006: Sign cleaning and repainting

This activity involves the cleaning of road signs, reflectors and guideposts and repainting of sign supporting structures, rear panels of signs, kilometre posts and culvert markers. Surfaces to be painted shall be clean, dry and free from loose material.

*Work Method*

The Contractor shall use **Labour** to carry out this item of work

*Quality Control*

- The cleaning and painting shall be carried out to the approval of the Engineer

Measurement Unit: No

The measurement shall be in number of signs, reflectors, or guideposts cleaned or painted.

Payment

The unit rate shall be the full compensation for labour, materials, tools and incidental costs required to carry out the work.

## SECTION 25: HIV/AIDS AWARENESS AND PREVENTION CAMPAIGN

**Scope:**
This section covers the Contractors obligations with regard to on-site HIV / AIDS awareness campaign and preventive measures that are to be instituted.

### 25-50-001 HIV / AIDS Awareness Campaign

The Contractor shall institute an HIV / AIDS awareness campaign amongst the workers for the duration of the Contract.
As part of the campaign the Contractor shall display AIDS awareness posters in all buildings frequented by workers employed on the Contract, where such buildings fall under the control of the Contractor.
In addition at least two of the Contractors vehicles regularly used on site shall display HIV / AIDS awareness posters. The posters shall be printed on gloss paper and shall be at least A1 size on buildings and A3 size or other approved size on vehicles. The message on the posters shall be supplied by the Employer through the Engineer.
Aids awareness shall also be included in the orientation process of all workers employed on the Contract.

Measurement Unit: month

The measurement shall be the calendar month or part thereof, measured over the duration of the campaign.

Payment
The unit rate shall include full compensation for labour and material required for the provision of the item.

### 25-50-002 AIDS Prevention Campaign

The Contractor shall institute an HIV / AIDS prevention campaign amongst the workers for the duration of the Contract.

As part of the campaign the Contractor shall make condoms available to the workers. The Employer through the Engineer shall supply the condoms.

Measurement Unit: month

The measurement shall be the calendar month measured over the duration of the campaign.

Payment

The unit rate shall include full compensation for labour and material including the distribution of condoms, required for the provision of the item.

# DRAWINGS

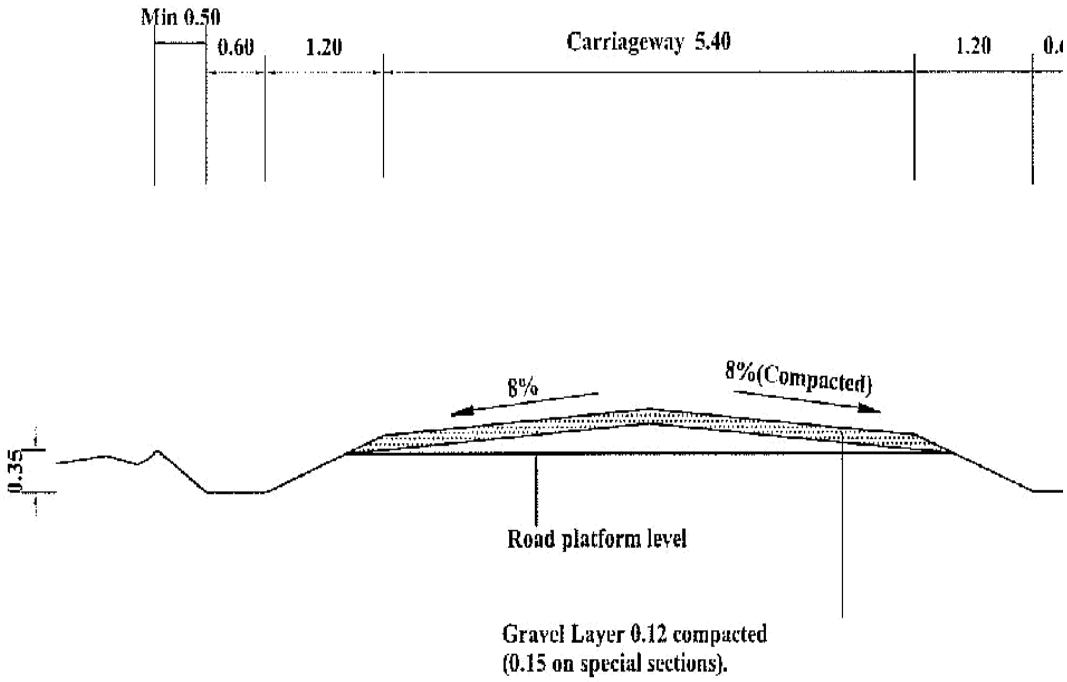


Notes:
1.All dimensions in metres
2.Traffic levels of > 200vpd may justify a carriageway width of 6.0m
3.Gravel thickness may be increased as directed by the Engineer

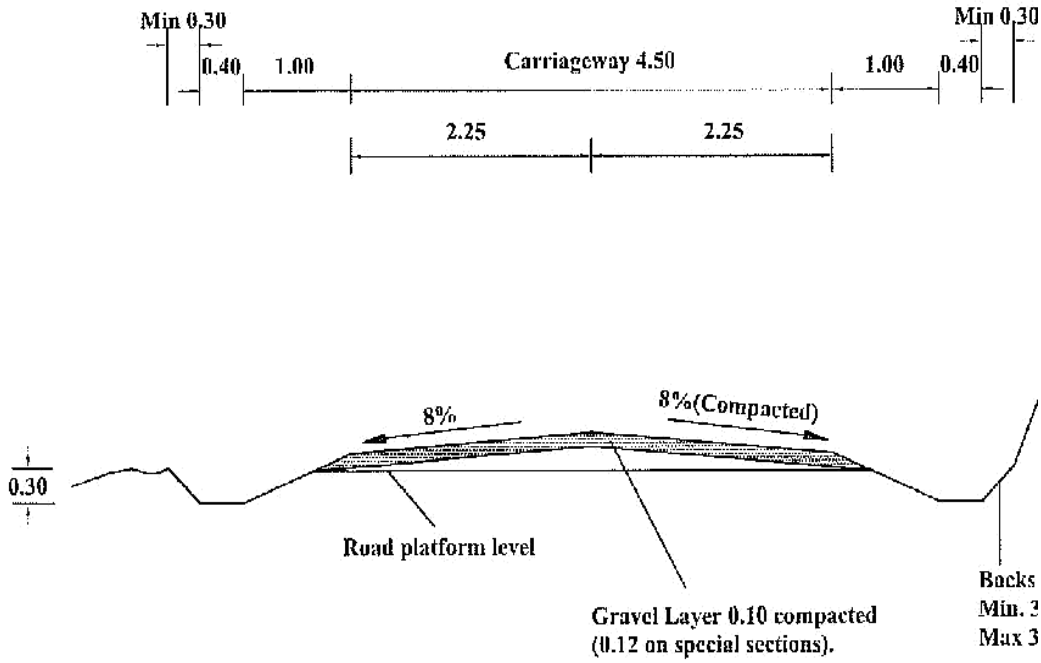


Notes:
1.All dimensions in metres
2.Gravel thickness may be increased as directed by the Engineer

C-2

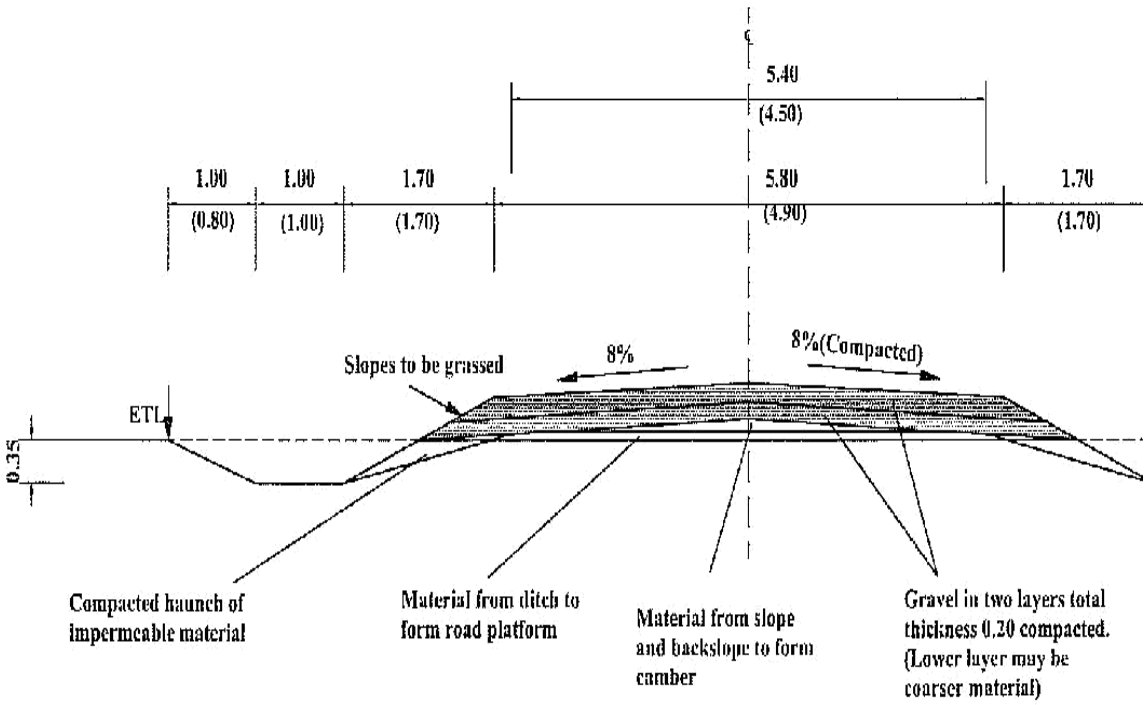
5.40
(4.50)
1.00
(0.80)
1.00
(1.00)
1.70
(1.70)
5.80
(4.90)
1.70
(1.70)
Slopes to be grassed
8%
8%(Compacted)
ETL
0.35
Compacted haunch of impermeable material
Material from ditch to form road platform
Material from slope and backslope to form camber
Gravel in two layers total thickness 0.20 compacted. (Lower layer may be coarser material)

C-3

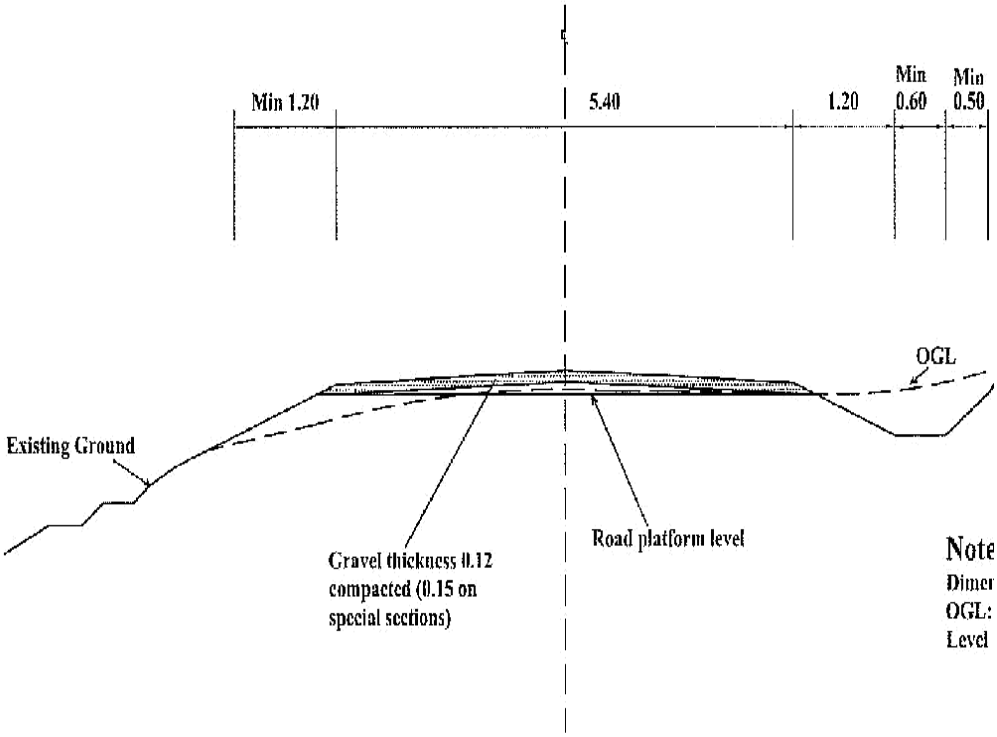
Min 1.20
5.40
1.20
Min
0.60
Min
0.50
OGL
Existing Ground
Gravel thickness 0.12
compacted (0.15 on
special sections)
Road platform level
Note
Dimer
OGL:
Level

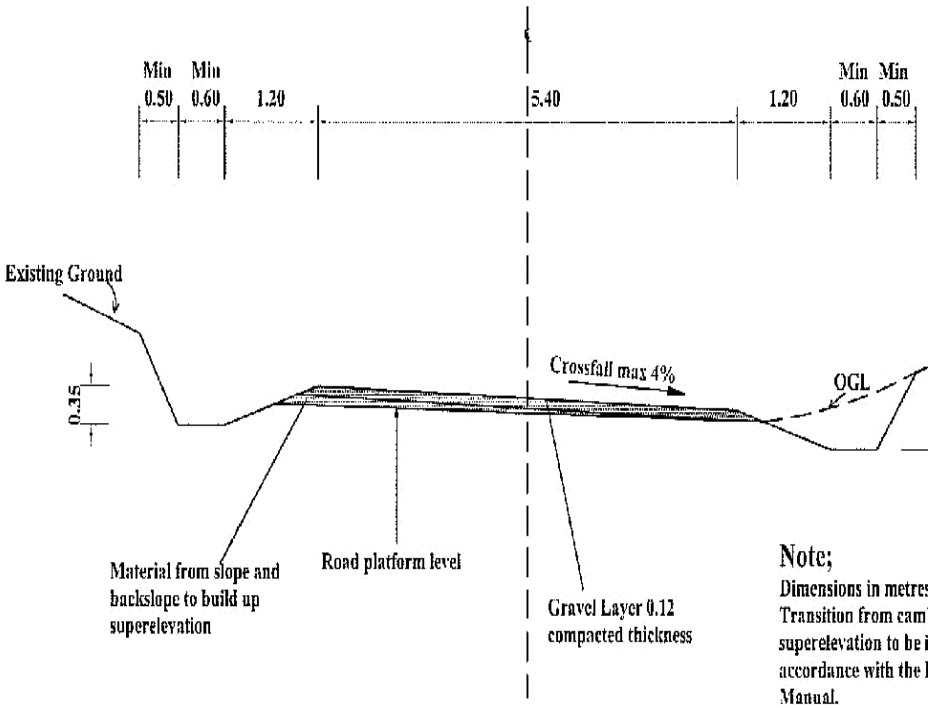


Note;
Dimensions in metres
Transition from cam superelevation to be i accordance with the l Manual.
OGL Original Groun

Mitre dr
Cross Se

1:1 0.6 M

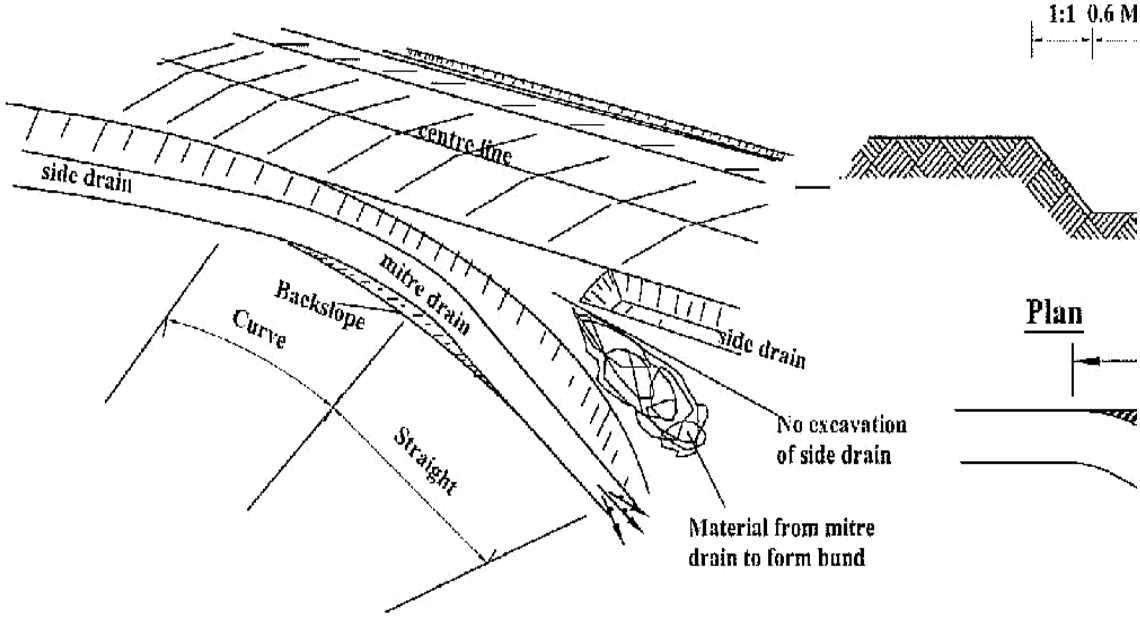


Plan

## Notes

Location,direction and length of th
by the Engineer

C-6

Scour checks made of wooden stakes

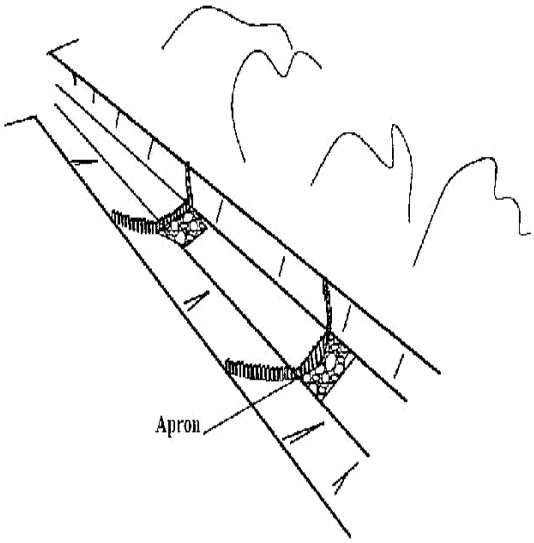


Scour checks made of stones

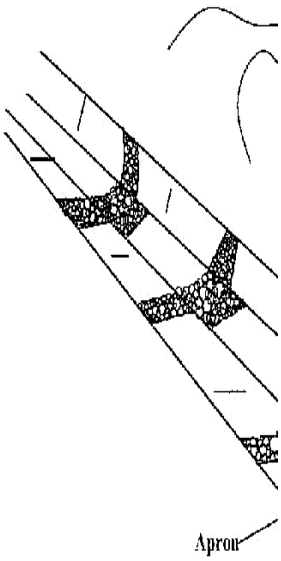

## Scour checks made of stones

### Cross section

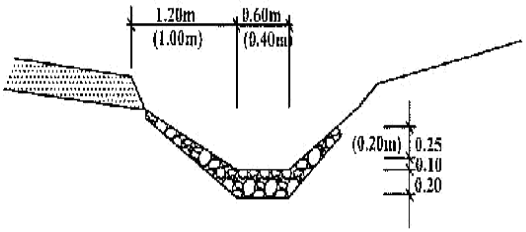


### Ground plan

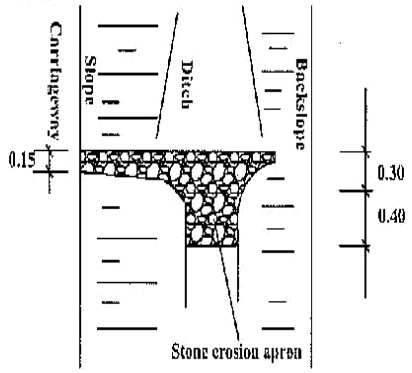


NOTE
1.Dimensions in metres

## Scour checks mac

### Cross section

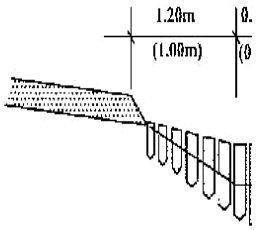


### Ground plan

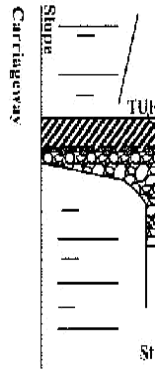


**STONE WEIGHT:MIN 10KG**
**STAKE DIAMETER: MIN. 0.1(**

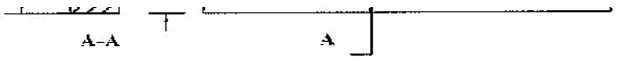


**Note**
1.Dimensions in mm

## SECTION OF MASONRY SCOUR CHECK

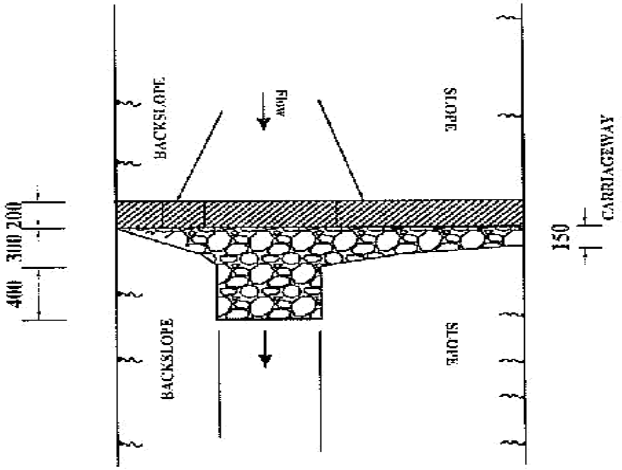


## PLAN OF DRAIN WITH SCOUR CHECK

| Cross-Section | Sizes in mm | | | Excav (m3) | Concrete (m3) | Apron stone pitching (m3) |
|---|---|---|---|---|---|---|
| | Length | Width | Depth | | | |
| A | 2400 | 200 | 550 | 0.22 | 0.25 | 0.18 |
| B | 2000 | 200 | 500 | 0.18 | 0.2 | 0.14 |

## SECTION OF CONCRETE SCOUR CHECK

**NOTE**
1.Dimensions in mm

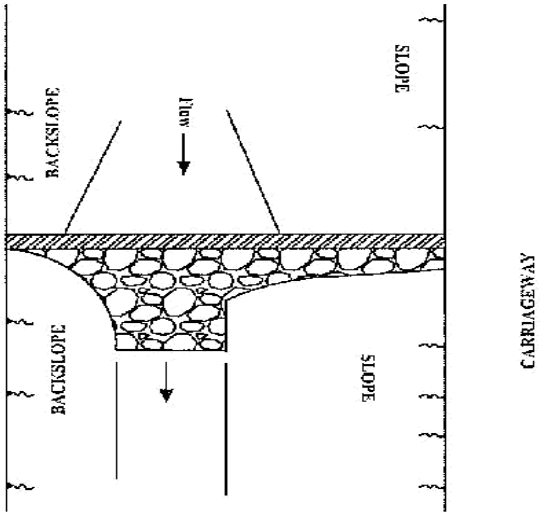


## PLAN OF DRAIN WITH SCOUR CHECK

| Cross-Section | Sizes in mm | | | Excav (m3) | Concrete (m3) | Apron stone pitching (m3) |
|---|---|---|---|---|---|---|
| | Length | Width | Depth | | | |
| A | 2400 | 100 | 550 | 0.13 | 0.15 | 0.18 |
| B | 2000 | 100 | 500 | 0.10 | 0.09 | 0.14 |

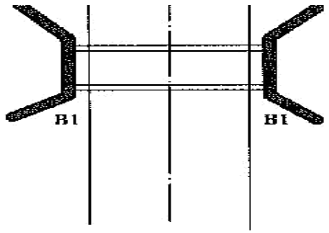


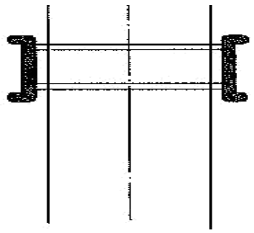

TYPE 2(ENTRY ONLY)

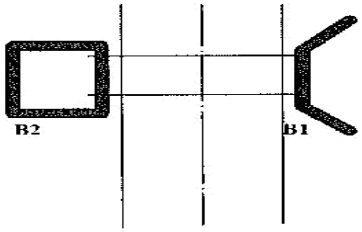


TYPE 4(ENTRY AND EXIT ON ACCESS)

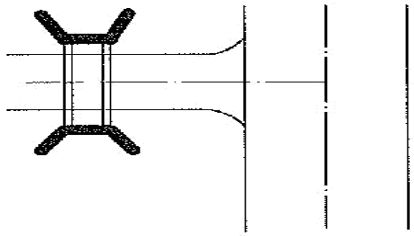

NOTE

1. The code numbers specify the shape and function and the code letter denotes the material:

A =Concrete block
B =Stone masonry
C =Concrete

## SECTION A-A

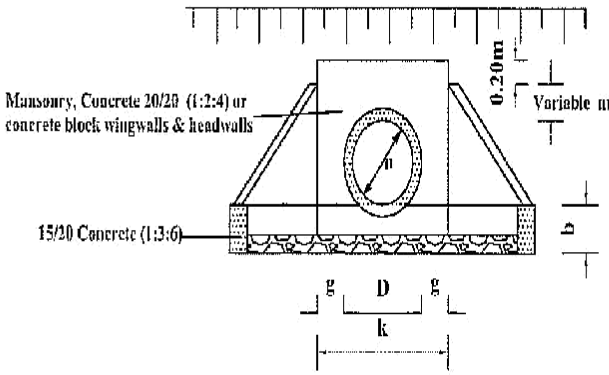


## SECTION B-B

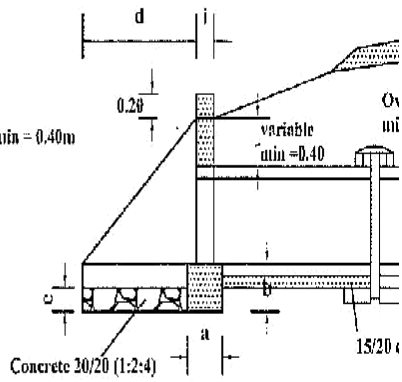


## PLAN

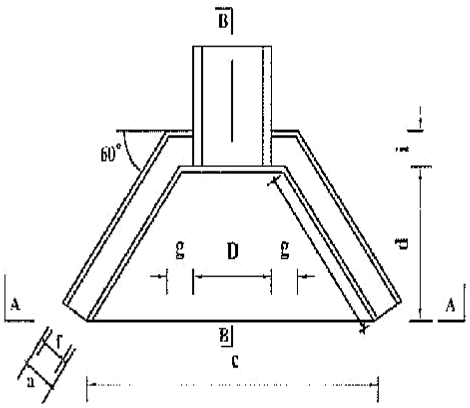


| CULVERT TYPES | |
|---|---|
| X-SECTION WIDTH m | No. of pipes |
| 4.50 | 6 |
| 5.50 | 7 |
| 6.50 | 8 |

| PIPE DIAMETER IN M | | TYPE A and C CONCRETE BL | |
|---|---|---|---|
| | | 450 | 600 |
| DIMENSION | UNIT | | |
| a FOUNDATION | m | 0.30 | 0.30 |
| b FOUNDATION | m | 0.30 | 0.30 |
| c FOUNDATION | m | 2.20 | 2.35 |
| d APRON | m | 1.00 | 1.00 |
| e APRON | m | 0.20 | 0.20 |
| f WALL | m | 0.20 | 0.20 |
| g WALL | m | 0.30 | 0.30 |
| h WALL | m | 1.15 | 1.15 |
| i WALL | m | 0.20 | 0.20 |
| k APRON | m | 1.05 | 1.20 |
| MATERIAL REQUIREMENT | | | |
| FOUNDATION (concrete) | m3 | 0.30 | 0.32 |
| HEAD/WINGWALLS (Conrete/Masonry) | m3 | 0.42 | 0.49 |
| APRON (concrete) | m3 | 0.33 | 0.36 |

C-12

## SECTION A-A

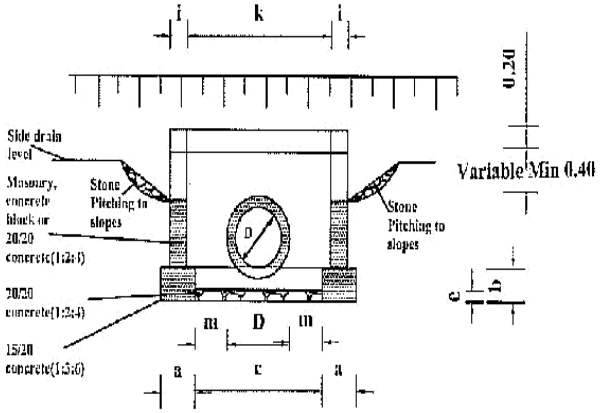


## SECTION B-B

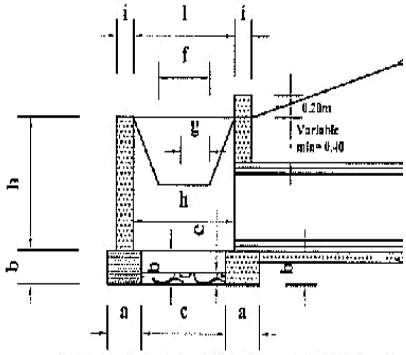


DIMENSIONS AND MATERIAL REQUIREMENTS

| PIPE DIAMETER IN (M) | | TYPE A CONCRETE BLOCKS | | | TY MA |
|---|---|---|---|---|---|
| | | 450 | 600 | 900 | 45 |
| DIMENSION | UNIT | | | | |
| a FOUNDATION | m | 0.30 | 0.30 | 0.30 | 0.4 |
| b FOUNDATION | m | 0.30 | 0.30 | 0.30 | 0.3 |
| c FOUNDATION | m | 1.10 | 1.10 | 1.40 | 1.2 |
| d APRON | m | 0.90 | 0.90 | 0.90 | 1.0 |
| e APRON | m | 0.20 | 0.20 | 0.20 | 0.2 |
| f DROP INLET | m | 0.60 | 0.60 | 0.60 | 0.6 |
| g DROP INLET | m | 0.30 | 0.40 | 0.60 | 0.3 |
| h DROP INLET | m | 0.60 | 0.80 | 1.20 | 0.6 |
| i DROP INLET | m | 0.20 | 0.20 | 0.20 | 0.4 |
| k DROP INLET | m | 1.20 | 1.20 | 1.50 | 1.2 |
| l DROP INLET | m | 1.00 | 1.00 | 1.00 | 1.0 |
| m DROP INLET | m | 0.38 | 0.30 | 0.30 | 0.3 |
| MATERIAL REQUIREMENT | | | | | |
| FOUNDATION (concrete) | m3 | 0.47 | 0.47 | 0.52 | 0.7 |
| HEAD/WINGWALLS (Concrete/Masonry) | m3 | 0.56 | 0.72 | 1.15 | 1.2 |
| APRON (concrete) | m3 | 0.24 | 0.24 | 0.30 | 0.2 |

## PLAN

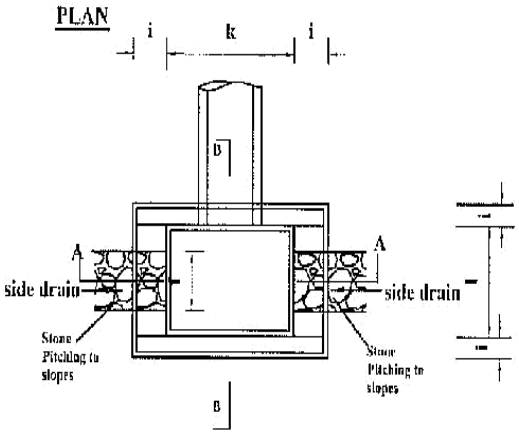

## SECTION A-A

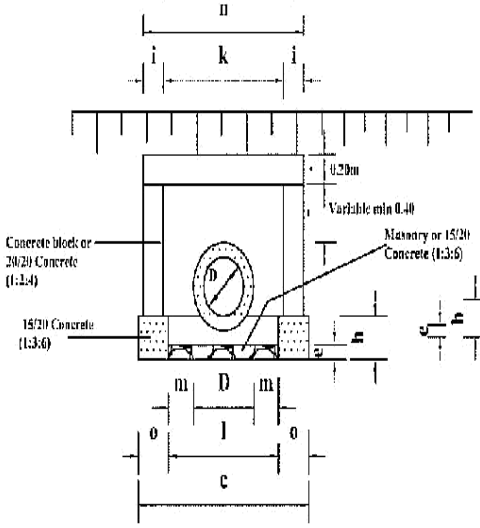


## SECTION B-B

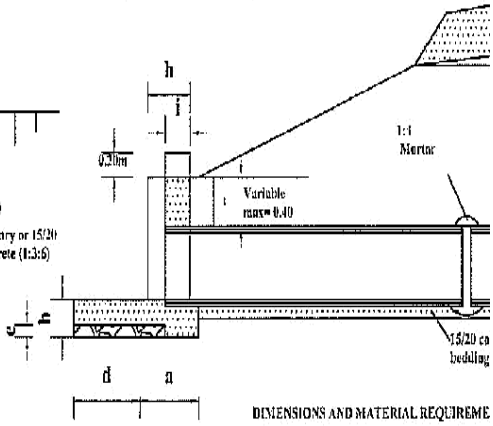


## PLAN

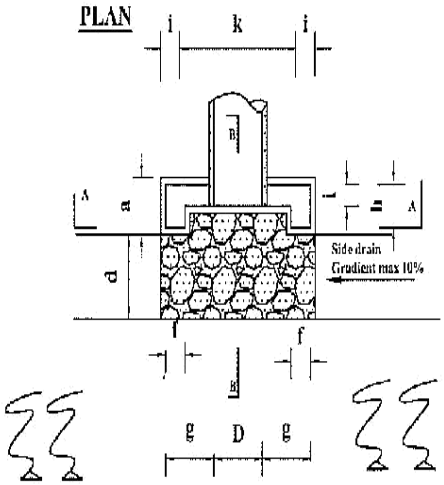


DIMENSIONS AND MATERIAL REQUIREME

| PIPE DIAMETER IN (M) | | | TYPE A and C CO BLOCKS | |
|---|---|---|---|---|
| | | | 450 | 600 |
| | DIMENSION | UNIT | | |
| a | FOUNDATION | m | 0.50 | 0.50 |
| b | FOUNDATION | m | 0.30 | 0.30 |
| c | FOUNDATION | m | 1.55 | 1.70 |
| d | APRON | m | 0.60 | 0.60 |
| e | APRON | m | 0.20 | 0.20 |
| f | HEADWALL | m | 0.20 | 0.20 |
| g | HEADWALL | m | 0.50 | 0.50 |
| h | HEADWALL | m | 0.50 | 0.50 |
| i | HEADWALL | m | 0.50 | 0.50 |
| k | HEADWALL | m | 0.50 | 0.50 |
| l | FOUNDATION | m | 0.50 | 0.50 |
| m | FOUNDATION | m | 0.50 | 0.50 |
| n | HEADWALL | m | 0.50 | 0.50 |
| o | FOUNDATION | m | 0.50 | 0.50 |
| MATERIAL REQUIREMENT | | | | |
| | FOUNDATION (concrete) | | 0.23 | 0.19 |
| | HEAD/WINGWALLS (Concrete/Masonry) | | 0.34 | 0.37 |
| | APRON (concrete) | | 0.95 | 0.99 |

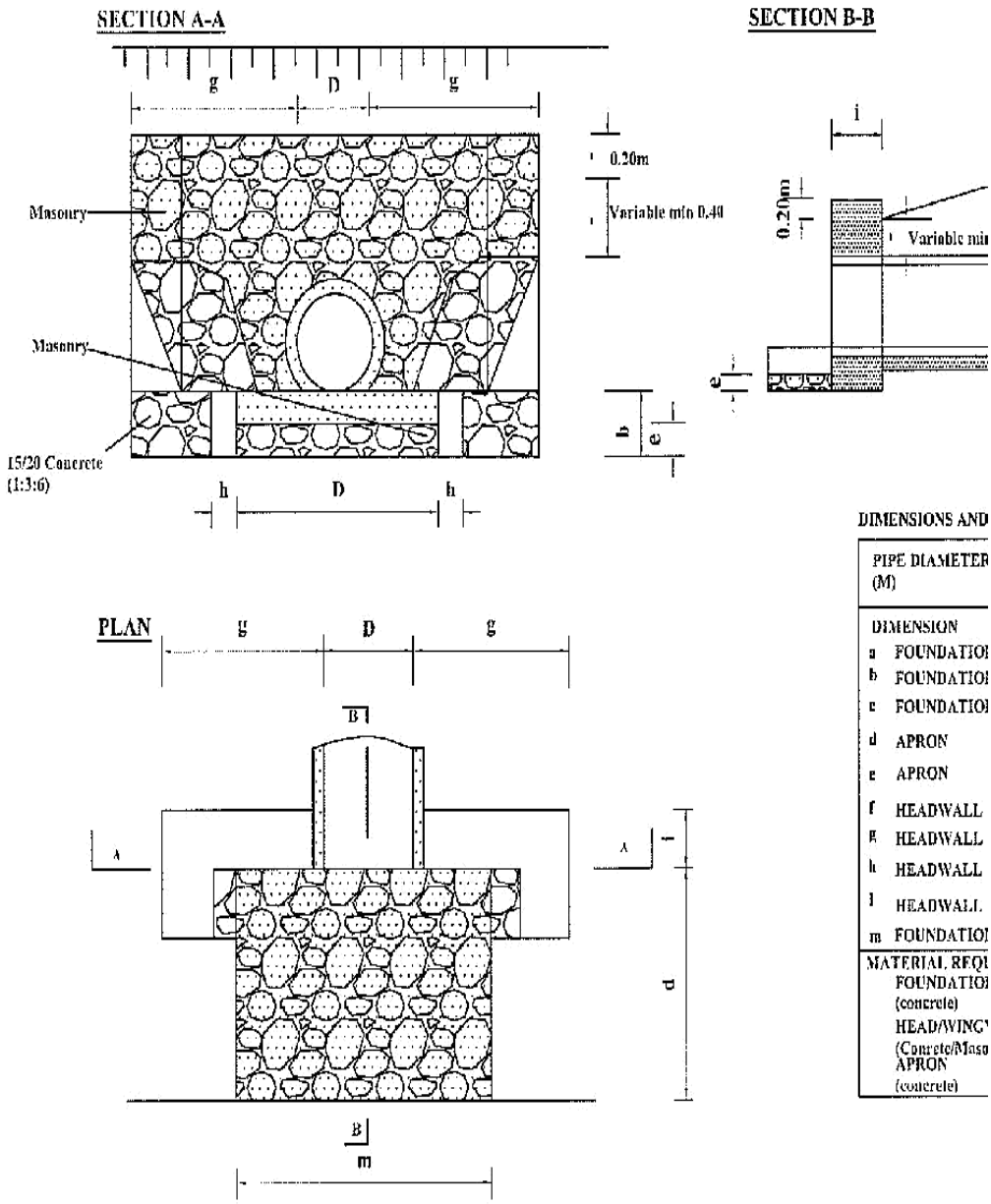
SECTION A-A
g
D
g
0.20m
Variable min 0.40
Masonry
Masonry
15/20 Concrete
(1:3:6)
h
D
h
b
e
SECTION B-B
i
0.20m
Variable mi
e
PLAN
g
D
g
B
A
A
i
d
B
m
DIMENSIONS AND
PIPE DIAMETER
(M)
DIMENSION
a FOUNDATIO
b FOUNDATIO
c FOUNDATIO
d APRON
e APRON
f HEADWALL
g HEADWALL
h HEADWALL
i HEADWALL
m FOUNDATIO
MATERIAL REQ
FOUNDATIO
(concrete)
HEAD/WING
(Conrete/Maso
APRON
(concrete)

## SECTION A-A

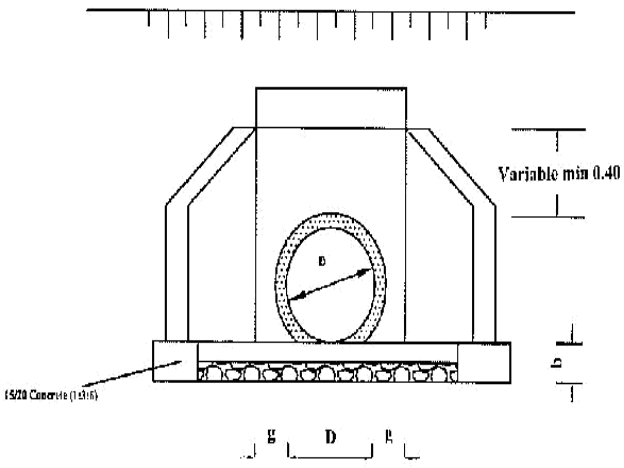


## PLAN

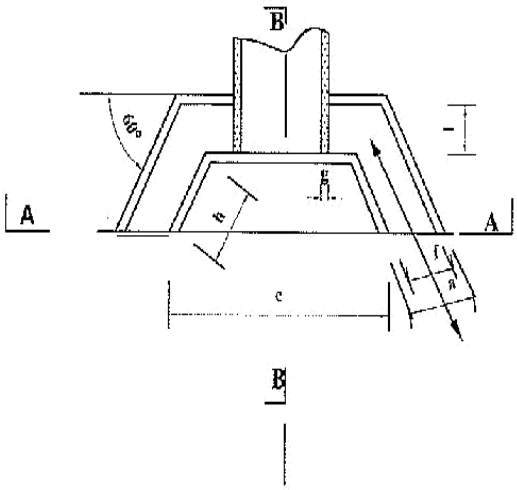


## SECTION B-B

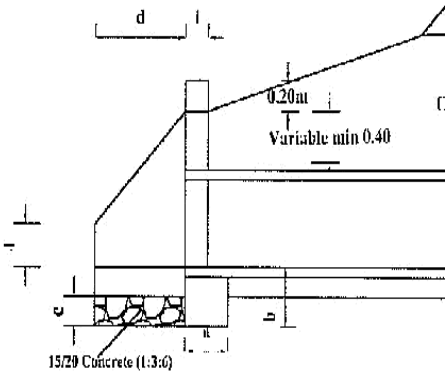


DIMENSIONS AND MATERIAL REQUIREMENTS

| PIPE DIAMETER IN (M) | | | TYPE A (CONCRETE BLOCKS) 450 | 600 | 900 |
|---|---|---|---|---|---|
| | DIMENSION | UNIT | | | |
| a | FOUNDATION | m | 0.30 | 0.30 | |
| b | FOUNDATION | m | 0.30 | 0.30 | |
| c | APRON | m | 1.34 | 1.49 | |
| d | APRON | m | 0.60 | 0.60 | |
| e | APRON | m | 0.20 | 0.20 | |
| f | WINGWALLS | m | 0.20 | 0.20 | |
| g | WINGWALLS | m | 0.10 | 0.10 | |
| h | HEADWALLS | m | 0.69 | 0.69 | |
| j | HEADWALLS | m | 0.20 | 0.20 | |
| k | HEADWALLS | m | 0.65 | 0.80 | |
| l | HEADWALLS | m | 0.40 | 0.40 | |
| MATERIAL REQUIREMENT | | | | | |
| FOUNDATION (concrete 1:3:6) | | | 0.18 | 0.20 | |
| HEAD/WINGWALLS (Conrete/Masonry) | | | 0.28 | 0.32 | |
| APRON (concrete) | | | 0.12 | 0.14 | |

C-15

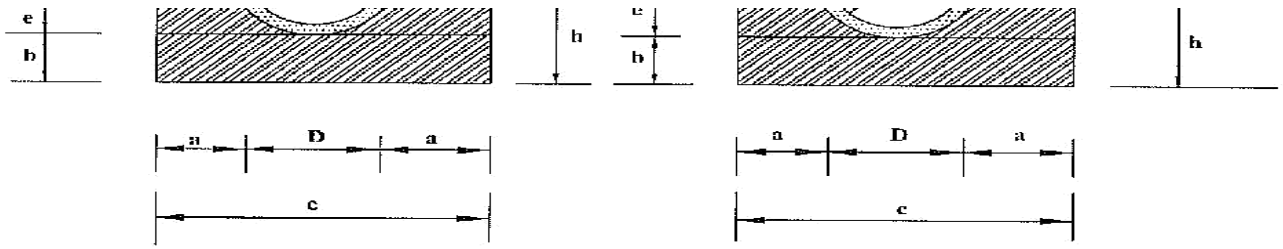


| Diameter (D) | 450 (mm) | 600 (mm) | 900 (mm) |
|---|---|---|---|
| a | 0.15 | 0.20 | 0.20 |
| b | 0.10 | 0.15 | 0.15 |
| c | 0.86 | 1.12 | 1.48 |
| d | 0.56 | 0.72 | 1.08 |
| e | 0.14 | 0.18 | 0.27 |
| f(min) | 0.34 | 0.45 | 0.68 |
| g | - | - | - |
| h | 0.24 | 0.33 | 0.42 |
| i | - | - | - |
| Concrete | Volume in (m3/m) | | |
| Class 15/20 | 0.24 | 0.24 | 0.24 |
| Application | -Fair subgrade condition<br>-Overfill > 75% of the pipe diameter<br>-Seasonal water flow only | | |
| Remarks | Material for back/overfill shall be approved by the Engineer | | |

| 450 (mm) | 600 (mm) | 900 (mm) |
|---|---|---|
| 0.15 | 0.20 | 0.20 |
| 0.10 | 0.15 | 0.15 |
| 0.86 | 1.12 | 1.48 |
| 0.56 | 0.72 | 1.08 |
| 0.28 | 0.36 | 0.54 |
| 0.34 | 0.45 | 0.68 |
| - | - | - |
| 0.38 | 0.51 | 0.69 |
| - | - | - |
| Volume in (m3/m) | | |
| 0.20 | 0.37 | 0.56 |
| -Fair to poor subgrade condition<br>-Overfill > 75% of the pipe diameter<br>-Seasonal water flow only | | |
| Material for back/overfill shall be approved by the Engineer | | |

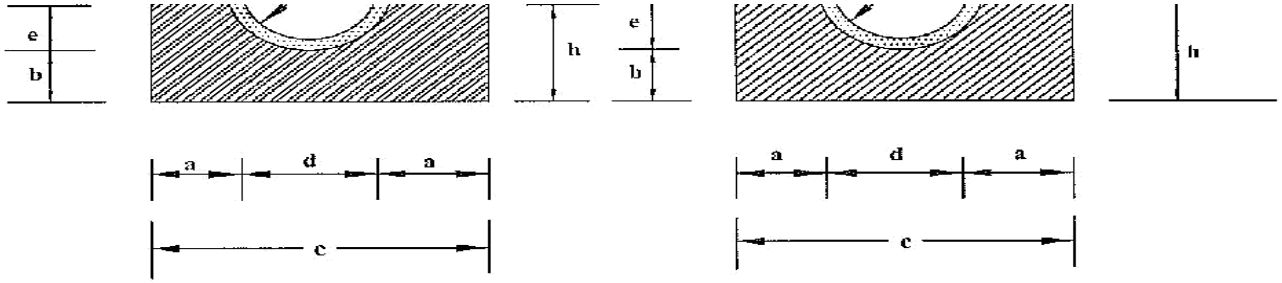


| Diameter (D) | 450 (mm) | 600 (mm) | 900 (mm) |
|---|---|---|---|
| a | 0.15 | 0.20 | 0.20 |
| b | 0.10 | 0.15 | 0.15 |
| c | 0.86 | 1.12 | 1.48 |
| d | 0.56 | 0.72 | 1.08 |
| e | 0.42 | 0.54 | 0.81 |
| f(min) | 0.23 | 0.3 | 0.45 |
| g | - | - | - |
| h | 0.52 | 0.69 | 0.96 |
| i | - | - | - |
| Concrete | Volume in (m3/m) | | |
| Class 15/20 | 0.26 | 0.47 | 0.71 |
| Application | -Fair subgrade condition<br>-Overfill > 75% of the pipe diameter<br>-Seasonal water flow only | | |
| Remarks | Material for back/overfill shall be approved by the Engineer | | |

| 450 (mm) | 600 (mm) | 900 (mm) |
|---|---|---|
| 0.15 | 0.20 | 0.20 |
| 0.10 | 0.15 | 0.15 |
| 0.86 | 1.12 | 1.48 |
| 0.56 | 0.72 | 1.08 |
| 0.46 | 0.52 | 0.78 |
| 0.15 | 0.15 | 0.15 |
| 0.15 | 0.15 | 0.15 |
| 0.81 | 1.02 | 1.38 |
| 0.28 | 0.35 | 0.45 |
| Volume in (m3/m) | | |
| 0.37 | 0.61 | 0.92 |
| -Fair to poor subgrade condition<br>-Overfill > 75% of the pipe diameter<br>-Seasonal water flow only | | |
| Material for back/overfill shall be approved by the Engineer | | |

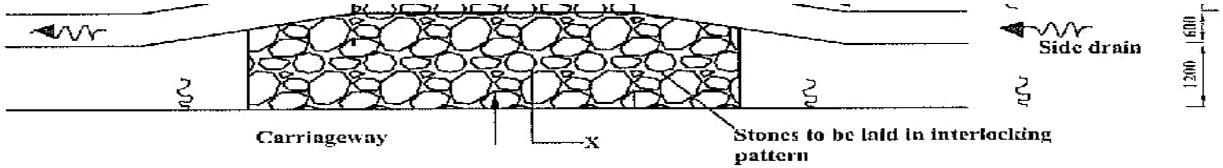


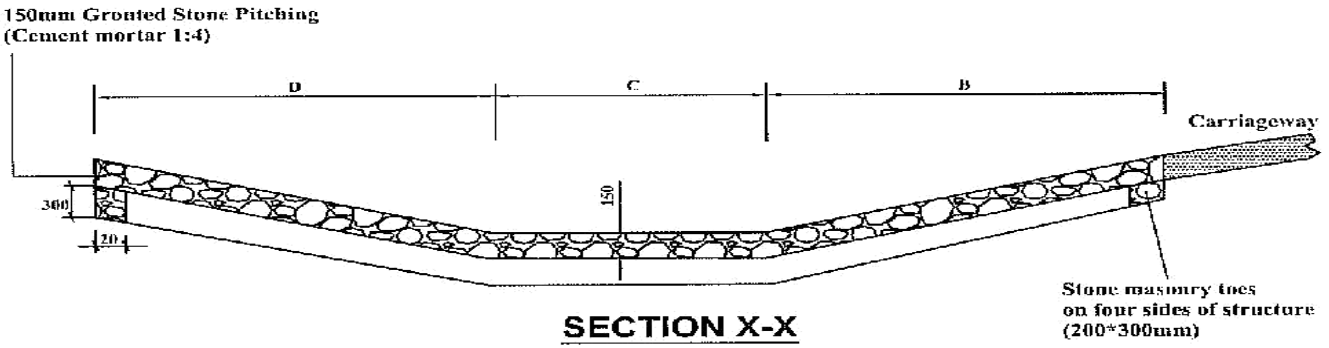


## SECTION X-X

| QUANTITIES TABLE | | | | | | | | |
|---|---|---|---|---|---|---|---|---|
| Cross section | DIMENSONS | | | | | Excavation(m3) | Stone masonry (m3) | 150mm Grouted stone pitching(m3) |
| | A | B | C | D | E | | | |
| A | 4000 | 1800 | 600 | 1800 | 4200 | 7.5 | 1.30 | 21.75 |
| | 6000 | 1800 | 600 | 1800 | 4200 | 10.00 | 1.60 | 30.15 |
| B | 4000 | 1400 | 400 | 1800 | 3600 | 7.00 | 1.20 | 18.30 |
| | 6000 | 1400 | 400 | 1800 | 3600 | 9.00 | 1.50 | 25.50 |

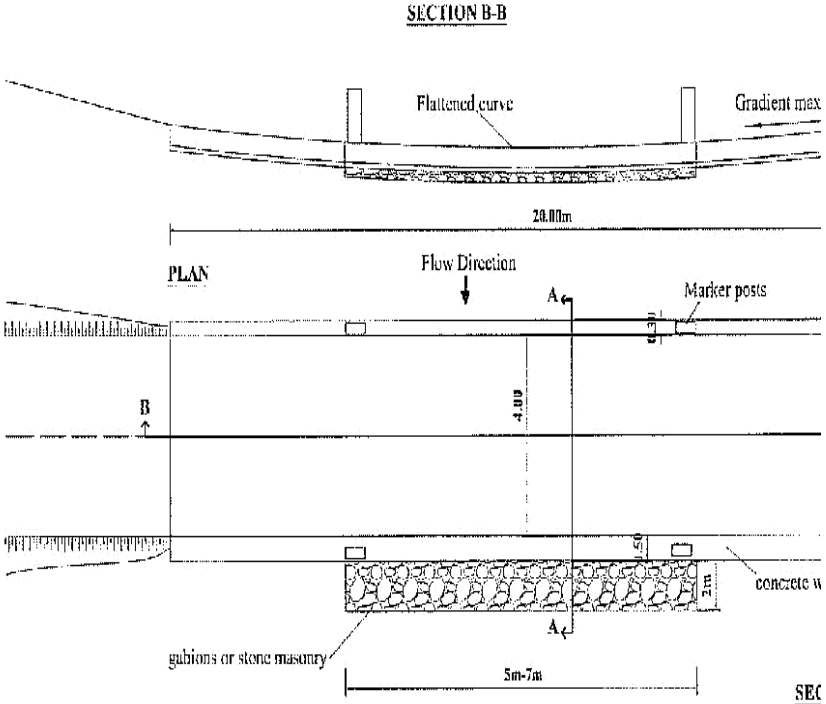


Material : All concrete Class 20/20 (1:2:4)

1 Concrete wall : 10m³
2 Concrete slab: 24m³ or stone masonry
3 Concrete toe : 8m³ or stone masonry
4 Gabions / mattress rock fill: 4.3m³ or stone masonry
5 Gabions /mattress: 36m²
6 Marker posts - precast concrete: 4 no.
7 Excavation (slab + toes + gabions) 54.2m³

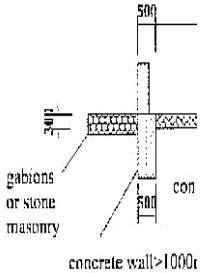

## SECTION A-A

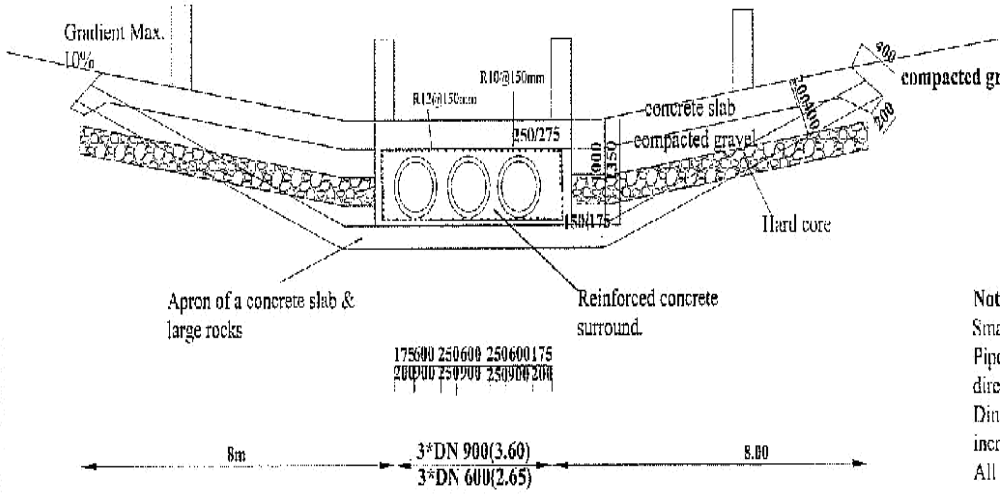


## PLAN

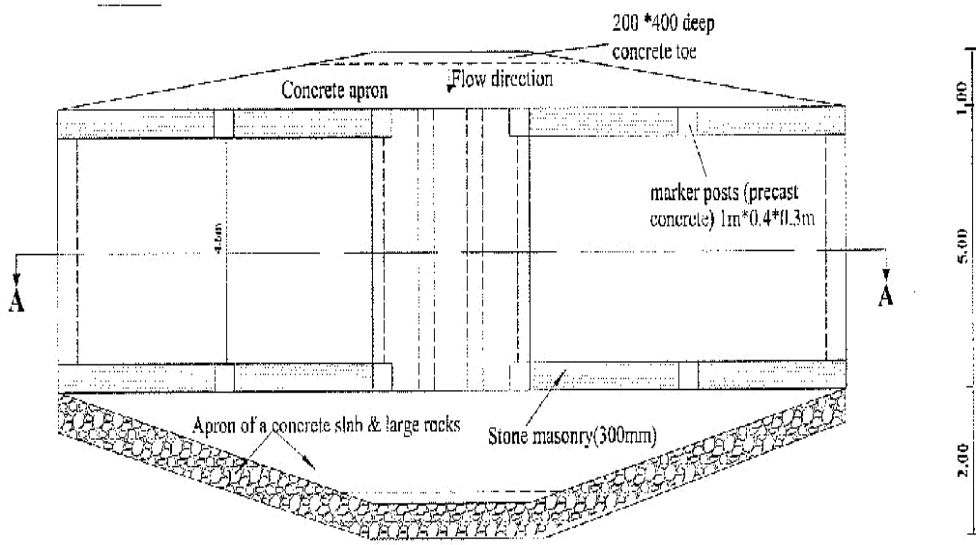

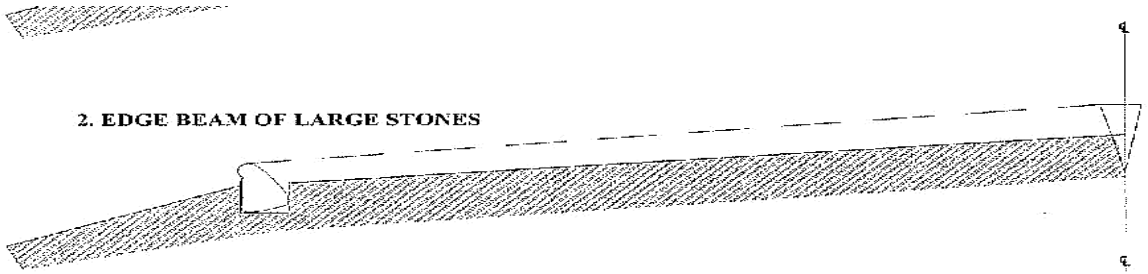

2. EDGE BEAM OF LARGE STONES

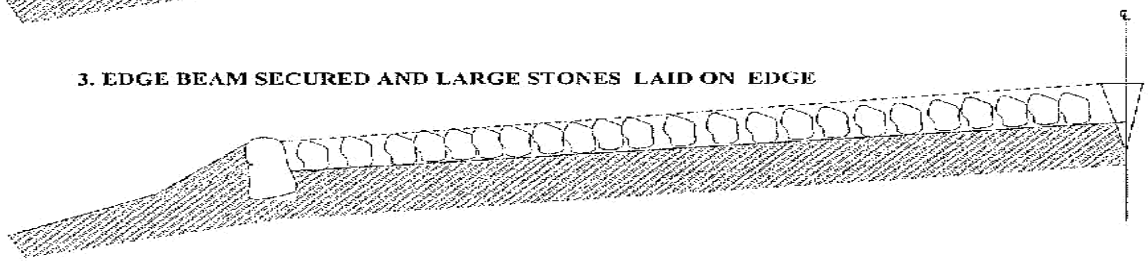

3. EDGE BEAM SECURED AND LARGE STONES LAID ON EDGE

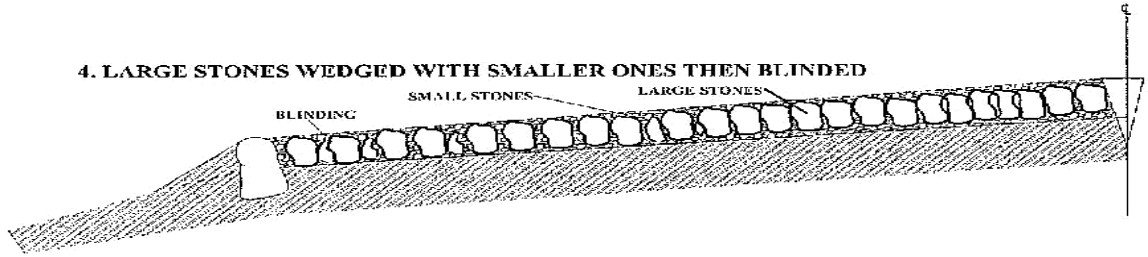


4. LARGE STONES WEDGED WITH SMALLER ONES THEN BLINDED

1. The type of sign required and their location shall be as shown on the Road Plan or as directed by the Engineer.
2. Sign plate to be 2mm thick mild steel plate
3. Sign post to be 50mm fixing clamps/brackets.
4. Sign plate to be fixed to steel tube by 8 Nos M10 bolts and 50mm fixing clamps/brackets.
5. Sign paints shall be reflective.
6. The sign plate and post shall be treated by applying two coats of lead red oxide paint before applying a priming and two finish coats of approved paints. Paints used shall have a hard, durable and glossy finish.

C-22

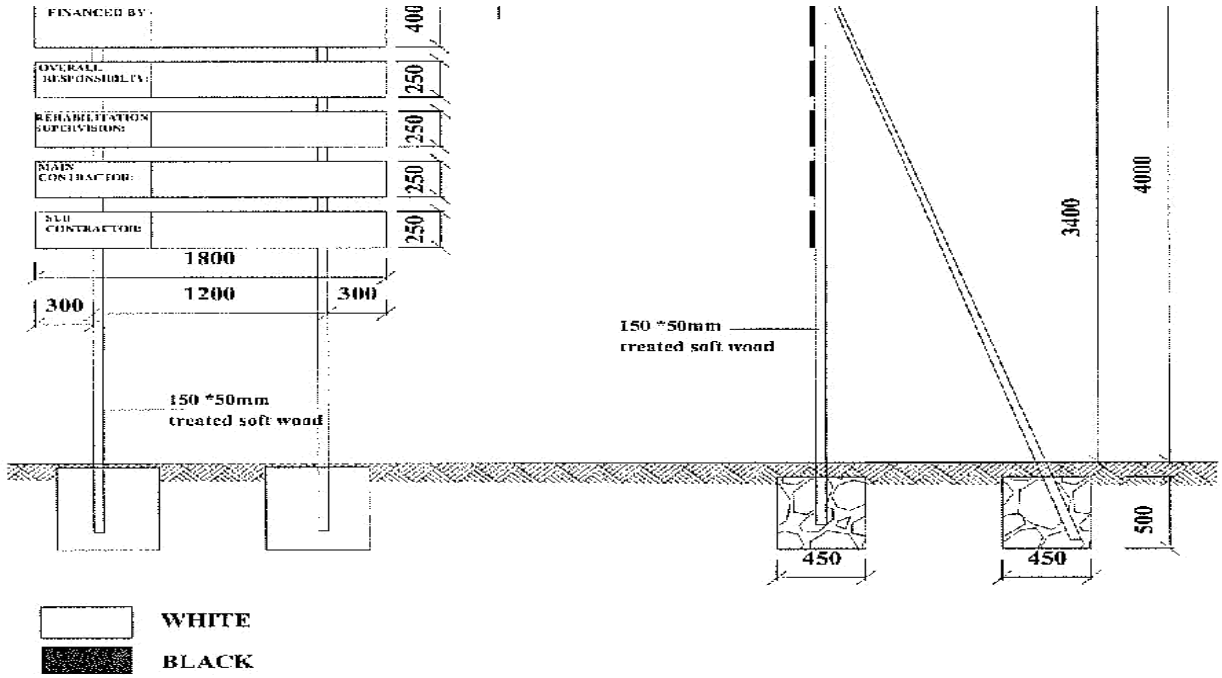


**NOTES**

**1. The wording of the project sign board and the location to be as directed by the Engineer.**
**2. Materials to be used for fabrication of signboard shall be pressure impregnated treated softwood timber**
**3.Wording board posts to be attached to the posts with galvanised nails**
**4.Project board posts and struts to be embedded in concrete class 20/20(1:2:4)**

## PREAMBLE TO BILLS OF QUANTITIES

1. The Bills of Quantities form part of the Contract Documents and are to be read in conjunction with the Instructions to Tenderers and these Documents.

2. The prices and rates to be inserted in the Bills of Quantities are to be the full, inclusive value of the work described under the several items including all costs and expenses which may be required in and for the execution of the work described and for the Contractor's overheads and profits. The rates shall be VAT exclusive but include all other taxes, levies and fees applicable. The rates shall be based on the Works being carried out in accordance with the R2000 Strategy of using optimum labour resources.

3. Each item in the Bills of Quantities contains only a brief description of the required work. Fuller details and descriptions of the work to be done, the materials to be used, the standards of workmanship, methods of measurement and payment are to be found in the various sections of the Specifications and on the Drawings.

4. The Quantities set out in the Bills of Quantities are estimated and represent substantially the work to be carried out. There is no guarantee that the Contractor will be required to carry out all the quantity of work indicated under any one particular item or group of items in the Bills of Quantities. The basis of payment shall be the Contractor's rates and the quantities of measured work done in fulfilment of the obligations under the Contract.

5. Work shall be carried out under Day works items only at the direction, and with the approval, of the Engineer. The Contractor shall enter rates in the Day works Schedule of Rates, which shall reflect the realistic costs, including overheads and profit, of each item. If, in the opinion of the Engineer, a rate is unreasonably high or low, the Contractor may be required to amend the rate to the satisfaction of the Engineer.

# BILLS OF QUANTITIES

| | | | | | | |
|---|---|---|---|---|---|---|
| **contract Name** | **KeRRA/011/LMU/39/012/2020-2021** | | | **Lamu** | | |
| **BILL OF QUANTITIES** | | | | **2020-21** | | |
| **Activity Group Title** | | | **Road Code** | UNCL 10 | | |
| **Contractor** | **0** | | **Section Name** | **SIYU -SHANGA ISHAKANI** | | |
| **Bill No.** | **ITEM CODE** | **DESCRIPTION** | **Quantity** | **UNIT** | **Unit Bid RATE (KShs)** | **Bill Item Cost without VAT (KSHs)** |
| 1 | 01-60-001 | Contract supervision | 500,000.00 | KS | 1.00 | 500,000.00 |
| 1 | 01-80-010 | Allow a prime cost of sum for materail testing as directed by the Engineer | 50,000.00 | PC SUM | 1.00 | 50,000.00 |
| 1 | 01-80-011 | Extra over item 01-80-010 for contractors overheads and profits | 50,000.00 | % | | |
| 1 | 01-80-016 | Provide and erect publicity signs as directed by the Engineer | 2.00 | NO. | | |
| 1 | 01-80-028 | Allow a prime cost sum for off road Enviromental Mitigation | 50,000.00 | PC SUM | 1.00 | 50,000.00 |
| 1 | 01-80-029 | Extra over 01-80-028 for profits and overheads | 50,000.00 | % | | |
| 4 | 04-50-003 | Heavy Bush Clearing | 30,000.00 | $M^2$ | | |
| 5 | 05-50-006 | Fill in soft material and compact | 200.00 | $M^3$ | | |
| 10 | 10-50-001 | Heavy grading without watering or compaction instructed by the Engineer | 10,000.00 | $M^2$ | | |
| 10 | 10-70-005 | Heavy Manual Reshaping with watering and compaction | 30,000.00 | $M^2$ | | |
| 12 | 12-50-002 | Provide, place, spread and compact natural gravel for subbase | 800.00 | $M^3$ | | |
| 25 | 25-50-001b | HIV/AIDS Prevention Campaigns | 50,000.00 | PC sum | 1.00 | 50,000.00 |
| 25 | 25-50-001c | Include % of Prime cost sum in item 25-50-001(b) for contractor_s overhead and profit | 50,000.00 | % | | |
| | | | | | | |
| | | **Sub Total** | | | | |
| | | **VAT @ 16%** | | | | |
| | | **Total Carried to Form of Tender** | | | | |
| | | | | | | |