KENYA RURAL ROADS AUTHORITY

(GARISSA REGION)

P.o. Box 1391-70100, GARISSA.
Email: garissa@kerra.go.ke

TOWNSHIP CONSTITUENCY:

BID DOCUMENT FOR:
ROUTINE MAINTENANCE OF JN A3-DIISO (C-291) ROAD:

VOTE/FUNDING:
22% CRF 2022-2023 FINANCIAL YEAR:

FINANCIAL YEAR: 2022-2023

INVITATION TO TENDER(ITT) No:
KeRRA/08/GSA/39/005/2022-2023

RESERVATION: WOMEN

BIDDERS ARE NOTIFIED THAT THIS TENDER IS PREPARED UNDER THE NEW PUBLIC PROCUREMENT REGULATORY AUTHORITY CONDITIONS AND FORMAT:

REGIONAL DIRECTOR, **KENYA RURAL ROADS AUTHORITY,** **P. O. BOX 1391 – 70100,** **GARISSA.**	**DIRECTOR GENERAL,** **KENYA RURAL ROADS AUTHORITY,** **P. O.BOX 48151 - 00100,** **NAIROBI.**

TABLE OF CONTENTS

PART 1: TENDERING PROCEDURES 1

SECTION I - INSTRUCTIONSTOTENDERERS 1

A. GENERALPROVISIONS 1
1.0 Scope of tender 1
2.0 Fraud and corruption 1
3.0 Eligible tenderers 1
4.0 Eligible goods, equipment, and services 3
5.0 Tenderer's responsibilities 3

B. CONTENTS OFTENDERDOCUMENTS 3

6.0 Sections of Tender Document 3
7.0 Clarification of Tender Document, Site Visit, Pre-tender Meeting 4
8.0 Amendment of Tender Documents 5
10.0 Language of Tender 5
11.0 Documents Comprising the Tender 5
12.0 Form of Tender and Schedules 5
13. AlternativeTenders 6
14.0 Tender Pricesand Discounts 6
15.0 Currencies of Tenderand Payment 6
16.0 Documents Comprising the Technical Proposal 7
17.0 Documents Establishing the Eligibility and Qualifications of the Tenderer 7
18.0 Period of Validity of Tenders 8
19.0 Tender Security 8

20.0 Format and Signing of Tender 9

D. SUBMISSION AND OPENING OF TENDERS 9

21.0 Sealing and Marking of Tenders 9
22.0 Deadline for Submission of Tenders 10
23.0 Late Tenders 10
24.0 Withdrawal, Substitution, and Modification of Tenders 10
25. Tender Opening 10

E. EVALUATION AND COMPARISON OF TENDERS 11

26. Confidentiality 11
27.0 Clarification of Tenders 11
29.0 Determination of Responsiveness 12
30.0 Non-material Non-conformities 12
31.0 Arithmetical Errors 12
33.0 Margin of Preference and Reservations 13
34.0 Nominated Subcontractors 13

35. Evaluation ofTenders 13
36.0 Comparison of tenders 14
37.0 Abnormally low tenders and abnormally high tenders 14
Abnormally LowTenders 14
Abnormally high tenders 14
38.0 Unbalanced and/or front-loaded tenders 14
39.0 Qualifications of the tenderer 15
40.0 Lowest evaluated tender 15
41.0 Procuring entity's right to accept any tender, and to reject any or all tenders 15

F. **AWARD OF CONTRACT** 15

42.0 Award criteria 15
43.0 Notice of intention to enter into a contract 15
44.0 Standstill Period 16
44.0 Standstill Period 16
45.0 Debriefing by The Procuring Entity 16
46.0 Letter of Award 16
47.0 Signing of Contract 16
48.0 Performance Security 16
49.0 Publication of Procurement Contract 16
50.0 Procurement related Complaint 17

SECTION II – TENDER DATA SHEET(TDS) 18

SECTION III - EVALUATION AND QUALIFICATION CRITERIA 23

1. General Provisions 23
2. Preliminary examination for Determination of Responsiveness 23
3. Tender Evaluation 23
4. Multiple Contracts 23
5. AlternativeTenders 24
6. Margin of Preference 24
7. Post qualification and Contract award 24

SECTION IV –TENDERING FORMS 29

QUALIFICATION FORMS 30

1. FOREIGN TENDERERS40% RULE 30
3. Form EQU: EQUIPMENT 31
4. FORM PER -1 32
5. FORM PER- 2: 33
6. TENDERERS QUALIFICATION WITHOUT PRE-QUALIFICATION 35
6.1 FORM ELI -1.1 35
6.2 FORM ELI -1.2 36
6.3 FORM CON– 2 37
6.4 FORM FIN– 3.1: 39
6.5 FORM FIN– 3.2: 40
6.6 FORM FIN– 3.3: 41
6.7 FORM FIN– 3.4: 41
6.8 FORM EXP- 4.1 42

6.9 FORM EXP- 4.2 (a) 43
6.10 FORM EXP- 4.2 (b) 44

OTHER FORMS 46

7. FORM OFTENDER 46
   a) TENDERER'S ELIGIBILITY- CONFIDENTIAL BUSINESS QUESTIONNAIRE 49
   b) CERTIFICATE OF INDEPENDENT TENDER DETERMINATION 52

c) SELF-DECLARATION FORM - SELF DECLARATION OF THE TENDERER 53
d) APPENDIX 1- FRAUD AND CORRUPTION 55

8. FORM OF TENDER SECURITY – DEMAND BANK GUARANTEE 57
9. FORM OF TENDER SECURITY (TENDER BOND) 58
10. FORM OFTENDER-SECURING DECLARATION. 59
11. APPENDIXTOTENDER 60

TECHNICAL PROPOSAL FORMS 60

12. Site Organization 60
13. Method Statement 60
14 Mobilization Schedule 60
15 Construction Schedule 60

PART 21201–WORKS' REQUIREMENTS 60

SECTION V – BILL OF QUANTITIES 61
1. Objectives 61
2. Content 61
3. Preamble 61
4. Rock 61
5. Work Items 61
6. Quantities 61
7. Units of Measurement 62
8. Ground and Excavation Levels 62
9. Daywork Schedule 62
10. Provisional Quantities and Sums 62
11. Summary 63
12 Sample Bills of Quantities 63
A. Preamble 63
B. Work Items 63
C. Schedule of Daywork Rates 66
12. Grand Summary 72

SECTION VI- SPECIFICATIONS 72

SECTION VII- DRAWINGS 73

SUPPLEMENTARY INFORMATION 74

PART 3 – CONDITIONS OF CONTRACT AND CONTRACT FORMS 75

SECTION VIII - GENERAL CONDITIONS OF CONTRACT 75

1. GENERAL CONDITIONS 76
2. THE PROCURING ENTITY 82
3. THE ENGINEER 83
4. THE CONTRACTOR 85
5. NOMINATED SUB CONTRACTORS 93
6. STAFFAND LABOR 94
7. Plant, Materials and Workmanship 97
8. COMMENCEMENT, DELAYS AND SUSPENSION 99
9. TESTS ON COMPLETION 102
10. Procuring Entity's Taking Over 103
11. Defects Liability 104
12. MEASUREMENT AND EVALUATION 106
13. VARIATIONS AND ADJUSTMENTS 108
14. Contract Price and Payment 112
15. TERMINATION BY PROCURING ENTITY 121
16. SUSPENSION AND TERMINATION BY CONTRACTOR 119
17. RISKAND RESPONSIBILITY 121
18. INSURANCE 123
19. FORCE MAJEURE 126
20. CLAIMS, DISPUTES AND ARBITRATION 128

SECTION IX - ARTICULAR CONDITIONS OF CONTRACT 131

SECTION X –CONTRACT FORMS 134

FORM No. 1 - NOTIFICATION OF INTENTION TO AWARD 135
FORM No. 2 - NOTIFICATION OF AWARD – LETTER OF ACCEPTANCE 137
FORM No. 3 -CONTRACTAGREEMENT 138
FORM No. 4 - PERFORMANCE SECURITY [Option 1 - Unconditional Demand Bank Guarantee] 139
FORM No. 5 - PERFORMANCE SECURITY [Option 2–Performance Bond] 140
FORM No. 6 – ADVANCE PAYMENT SECURITY 141
FORM No. 7 – RETENTION MONEY SECURITY 143

PART 1 - TENDERING PROCEDURES

SECTION I-INSTRUCTIONS TO TENDERERS

A GENERAL PROVISIONS

1. Sope of Tender

1.1 The Procuring Entity as defined in the Appendix to Conditions of Contract invites tenders for Works Contract as described in the tender documents. The name, identification, and number of lots (contracts) of this Tender Document are specified in the TDS.

2. Fraud and Corruption

2.1 The Procuring Entity requires compliance with the provisions of the Public Procurement and Asset Disposal Act, 2015, Section 62 "Declaration not to engage in corruption". The tender submitted by a person shall include a declaration that the person shall not engage in any corrupt or fraudulent practice and a declaration that the person or his or her sub-contractors are not debarred from participating in public procurement proceedings.

2.2 The Procuring Entity requires compliance with the provisions of the Competition Act 2010, regarding collusive practices in contracting. Any tenderer found to have engaged in collusive conduct shall be disqualified and criminal and/or civil sanctions may be imposed. To this effect, Tenders shall be required to complete and sign the "Certificate of Independent Tender Determination" annexed to the Form of Tender.

2.3 Tenderers shall permit and shall cause their agents (where declared or not), subcontractors, sub-consultants, service providers, suppliers, and their personnel, to permit the Procuring Entity to inspect all accounts, records and other documents relating to any initial selection process, pre-qualification process, tender submission, proposal submission, and contract performance (in the case of award), and to have them audited by auditors appointed by the Procuring Entity.

2.4 Unfair Competitive Advantage -Fairness and transparency in the tender process require that the firms or their Affiliates competing for a specific assignment do not derive a competitive advantage from having provided consulting services related to this tender. To that end, the Procuring Entity shall indicate in the Data Sheet and make available to all the firms together with this tender document all information that would in that respect give such firm any unfair competitive advantage over competing firms.

3. Eligible Tenderers

3.1 A Tenderer may be a firm that is a private entity, a state-owned enterprise or institution subject to ITT 3.8, or an individual or any combination of such entities in the form of a joint venture (JV) under an existing agreement or with the intent to enter into such an agreement supported by a letter of intent. In the case of a joint venture, all members shall be jointly and severally liable for the execution of the entire Contract in accordance with the Contract terms. The JV shall nominate a Representative who shall have the authority to conduct all business for and on behalf of any and all the members of the JV during the tendering process and, in the event the JV is awarded the Contract, during contract execution. Members of a joint venture may not also make an individual tender, be a subcontractor in a separate tender or be part of another joint venture for the purposes of the same Tender. The maximum number of JVmembers shall be specified in the **TDS.**

3.2 Public Officers of the Procuring Entity, their Spouses, Child, Parent, Brothers or Sister. Child, Parent, Brother or Sister of a Spouse, their business associates or agents and firms/organizations in which they have a substantial or controlling interest shall not be eligible to tender or be awarded a contract. Public Officers are also not allowed to participate in any procurement proceedings.

3.3 A Tenderer shall not have a conflict of interest. Any tenderer found to have a conflict of interest shall be disqualified. A tenderer may be considered to have a conflict of interest for the purpose of this tendering process, if the tenderer:

a) Directly or indirectly controls, is controlled by or is under common control with another tenderer; or

b) Receives or has received any direct or indirect subsidy from another tenderer; or

c) Has the same legal representative as another tenderer; or

d) Has a relationship with another tenderer, directly or through common third parties, that puts it in a position to influence the tender of another tenderer, or influence the decisions of the Procuring Entity regarding this tendering process; or

e) Any of its affiliates participated as a consultant in the preparation of the design or technical specifications of the goods or works that are the subject of the tender; or

f) any of its affiliates has been hired (or is proposed to be hired) by the Procuring Entity as a consultant for Contract implementation; or

g) Would be providing goods, works, or non-consulting services resulting from or directly related to consulting services for the preparation or implementation of the contract specified in this Tender Document; or

h) Has a close business or personal elationship with senior management or professional staff of the Procuring Entity who has the ability to influence the bidding process and:

i) are directly or indirectly involved in the preparation of the Tender document or specifications of the Contract, and/or the Tender evaluation process of such contract; or

ii) may be involved in the implementation or supervision of such Contract unless the conflict stemming from such relationship has been resolved in a manner acceptable to the Procuring Entity throughout the tendering process and execution of the Contract.

3.4 A tenderer shall not be involved incorrupt, coercive, obstructive or fraudulent practice. A tenderer that is proven to have been involved in any of these practices shall be automatically disqualified.

3.5 A Tenderer (either individually or as a JV member) shall not participate in more than one Tender, except for permitted alternative tenders. This includes participation as a subcontractor in other Tenders. Such participation shall result in the disqualification of all Tenders in which the firm is involved. Members of a joint venture may not also make an individual tender, be a subcontractor in a separate tender or be part of another joint venture for the purposes of the same Tender. A firm that is not a tenderer or a JV member may participate as a subcontractor in more than one tender.

3.6 A Tenderer may have the nationality of any country, subject to the restrictions pursuant to ITT3.9. A Tenderer shall be deemed to have the nationality of a country if the Tenderer is constituted, incorporated or registered in and operates inconformity with the provisions of the laws of that country, as evidenced by its articles of incorporation (or equivalent documents of constitution or association) and its registration documents, as the case may be. This criterion also shall apply to the determination of the nationality of proposed subcontractors or sub-consultants for any part of the Contract including related Services.

3.7 A Tenderer that has been debarred from participating in public procurement shall be ineligible to tender or be awarded a contract. The list of debarred firms and individuals is available from the website of PPRA www.ppra.go.ke.

3.8 A Tenderer that is a state-owned enterprise or a public institution in Kenya may be eligible to tender and be awarded a Contract(s) only if it is determined by the Procuring Entity to meet the following conditions, i.e. if it is:

(i) A legal public entity of Government and/or public administration,
(ii) financially autonomous and not receiving any significant subsidies or budget support from any public entity or Government, and
(iii) operating under commercial law and vested with legal rights and liabilities similar to any commercial enterprise to enable it compete with firms in the private sector on an equal basis.

3.9 Firms and individuals shall be ineligible if their countries of origin are:

a) as a matter of law or official regulations, Kenya prohibits commercial relations with that country, or

b) by an act of compliance with a decision of the United Nations Security Council taken under Chapter VII of the Charter of the United Nations, Kenya prohibits any import of goods or contracting of works or services from that country, or any payments to any country, person, or entity in that country.

A tenderer shall provide such documentary evidence of eligibility satisfactory to the Procuring Entity, as the Procuring Entity shall reasonably request.

3.10 Foreign tenderers are required to source at least forty (40%) percent of their contract inputs (in supplies, local subcontracts and labor) from citizen suppliers and contractors. To this end, a foreign tenderer shall provide inits tender documentary evidence that this requirement is met. Foreign tenderers not meeting this criterion will be automatically disqualified. Information required to enable the Procuring Entity determine if this condition is met shall be provided for this purpose in *"SECTION III-EVALUATION AND QUALIFICATION CRITERIA, Item 9"*.

3.11 Pursuant to the eligibility requirements of ITT4.10, a tender is considered a foreign tenderer, if the tenderer is not

registered in Kenya or if the tenderer is registered in Kenya and has less than 51 percent ownership by Kenyan citizens. JVs are considered as foreign tenderers if the individual member firms are not registered in Kenya or if are registered in Kenya and have less than 51 percent ownership by Kenyan citizens. The JV shall not subcontract to foreign firms more than 10 percent of the contract price, excluding provisional sums.

3.12 The National Construction Authority Act of Kenya requires that all local and foreign contractors be registered with the National Construction Authority and be issued with a Registration Certificate before they can undertake any construction works in Kenya. Registration shall not be a condition for tender, but it shall be a condition of contract award and signature. A selected tenderer shall be given opportunity to register before such award and signature of contract. Application for registration with National Construction Authority may be accessed from the website www.nca.go.ke.

3.13 The Competition Act of Kenya requires that firms wishing to tender as Joint Venture undertakings which may prevent, distort or lessen competition in provision of services are prohibited unless they are exempt in accordance with the provisions of Section 25 of the Competition Act, 2010. JVs will be required to seek for exemption from the Competition Authority. Exemption shall not be a condition for tender, but it shall be a condition of contract award and signature. A JV tenderer shall be given opportunity to seek such exemption as a condition of award and signature of contract. Application for exemption from the Competition Authority of Kenya may be accessed from the website www.cak.go.ke.

4.14 Kenyan tenderer shall be eligible to tender if it provides evidence of having fulfilled his/her tax obligations by producing a valid tax compliance or valid tax certificate issued by the Kenya Revenue Authority.

4. Eligible Goods, Equipment, and Services

4.1 Goods, equipment and services to be supplied under the Contract may have their origin in any country that is not ineligible under ITT3.9. At the Procuring Entity's request, Tenderers may be required to provide evidence of the origin of Goods, equipment and services.

4.2 Any goods, works and production processes with characteristics that have been declared by the relevant national environmental protection agency or by other competent authority as harmful to human beings and to the environment shall not be eligible for procurement.

5. Tenderer's Responsibilities

5.1 The tenderer shall bear all costs associated with the preparation and submission of his/her tender, and the Procuring Entity will in no case be responsible or liable for those costs.

5.2 The tenderer, at the tenderer's own responsibility and risk, is encouraged to visit and examine and inspect the Site of the Works and its surroundings and obtain all information that may be necessary for preparing the tender and entering into a contract for construction of the Works. The costs of visiting the Site shall be at the tenderer's own expense.

5.3 The Tenderer and any of its personnel or agents will be granted permission by the Procuring Entity to enter up on its premises and lands for the purpose of such visit. The Tenderer shall indemnify the Procuring Entity against all liability arising from death or personal injury, loss of or damage to property, and any other losses and expenses incurred as a result of the examination and inspection.

5.4 The tenderer shall provide in the Form of Tender and Qualification Information, a preliminary description of the proposed work method and schedule, including charts, as necessary or required.

B. CONTENTS OF TENDER DOCUMENTS

6. Sections of Tender Document

6.1 The tender document consists of Parts 1, 2, and 3, which includes all the sections specified below, and which should be read in conjunction with any Addenda issued in accordance with ITT10.

PART 1: Tendering Procedures
Section I: Instructions to Tenderers
Section II: Tender Data Sheet (TDS)

Section III: Evaluation and Qualification Criteria
Section IV: Tendering Forms
PART 2: Works' Requirements
Section V: Bills of Quantities
Section VI: Specifications
Section VII: Drawings
PART 3: Conditions of Contract and Contract Forms
Section VIII: General Conditions (GCC)
Section IX: Particular Conditions of Contract
Section X: Contract Forms

6.2 The Invitation toTender Notice issued by the Procuring Entity is not part of the Contract documents.

6.3 Unless obtained directly from the Procuring Entity, the Procuring Entity is not responsible for the completeness of the Tender document, responses to requests for clarification, the minutes of a pre-arranged site visit and those of the pre-Tender meeting (if any), or Addenda to the Tender document in accordance with ITT 10. In case of any contradiction, documents obtained directly from the Procuring Entity shall prevail.

6.4 The Tenderer is expected to examine all instructions, forms, terms, and specifications in the Tender Document and to furnish with its Tender all information and documentation as is required by the Tender document.

7. Clarification of Tender Document, Site Visit, Pre-Tender Meeting

7.1 A Tenderer requiring any clarification of the Tender Document shall contact the Procuring Entity in writing at the Procuring Entity's address **specified in the TDS** or raise its enquiries during the pre-Tender meeting if provided for in accordance with ITT 7.2. The Procuring Entity will respond in writing to any request for clarification, provided that such request is received no later than the period specified in the **TDS p**rior to the deadline for submission of tenders. The Procuring Entity shall forward copies of its response to all tenderers who have acquired the Tender D documents in accordance with ITT 7.4, including a description of the inquiry but without identifying its source. If so specified **in the TDS**, the Procuring Entity shall also promptly publish its response at the web page identified in the **TDS**. Should the clarification result in changes to the essential elements of the Tender Documents, the Procuring Entity shall amend the Tender Documents following the procedure under ITT 8 and ITT 22.2.

7.2 The Tenderer, at the Tenderer's own responsibility and risk, is encouraged to visit and examine and inspect the site(s) of the required contracts and obtain all information that may be necessary for preparing a tender. The costs of visiting the Site shall be at the Tenderer’s own expense. The Procuring Entity shall specify in the **TDS** if a pre-arranged Site visit and or a pre-tender meeting will be held, when and where. The Tenderer's designated representative is invited to attend a pre-arranged site visit and a pre-tender meeting, as the case may be. The purpose of the site visit and the pre-tender meeting will be to clarify issues and to answer questions on any matter that may be raised at that stage.

7.3 The Tenderer is requested to submit any questions in writing, to reach the Procuring Entity not later than the period specified in the **TDS** before the meeting.

7.4 Minutes of a pre-arranged site visit and those of the pre-tender meeting, if applicable, including the text of the questions asked by Tenderers and the responses given, together with any responses prepared after the meeting, will be transmitted promptly to all Tenderers who have acquired the Tender Documents. Minutes shall not identify the source of the questions asked.

7.5 The Procuring Entity shall also promptly publish anonym zed (*no names*) Minutes of the pre-arranged site visit and those of the pre-tender meeting at the web page identified **in the TDS**. Any modification to the Tender Documents that may become necessary as a result of the pre-arranged site visit and those of the pre-tender meeting shall be made by the Procuring Entity exclusively through the issue of an Addendum pursuant to ITT 8 and not through the minutes of the pre-Tender meeting. Non-attendance at the pre-arranged site visit and the pre-tender meeting will not be a cause for disqualification of a Tenderer.

8. Amendment of Tender Documents

8.1 At any time prior to the deadline for submission of Tenders, the Procuring Entity may amend the Tender Documents by issuing addenda.

8.2 Any addendum issued shall be part of the Tender Documents and shall be communicatedinwritingtoall who have obtained the Tender Documents from the Procuring Entity. The Procuring Entity shall also promptly publish the addendum on the Procuring Entity's website in accordance with ITT 7.5.

8.3 To give Tenderers reasonable time in which to take an addendum into account in preparing their Tenders, the Procuring Entity should extend the deadline for the submission of Tenders, pursuant to ITT 22.2.

C. PREPARATION OF TENDERS

9. Cost of Tendering

The Tenderer shall meet all costs associated with the preparation and submission of its Tender, and the Procuring Entity shall not be responsible or liable for those costs, regardless of the conduct or outcome of the tendering process.

10. Language of Tender

The Tender, as well as all correspondence and documents relating to the tender exchanged by the tenderer and the Procuring Entity, shall be written in the English Language. Supporting documents and printed literature that are part of the Tender may be in another language provided they are accompanied by an accurate and notarized translation of the relevant passages into the English Language, in which case, for purposes of interpretation of the Tender, such translation shall govern.

11. Documents Comprising the Tender

11.1 The Tender shall comprise the following:

a) Form of Tender prepared in accordance with ITT 12;
b) Schedules including priced Bill of Quantities, completed in accordance with ITT 12 and ITT 14;
c) Tender Security or Tender-Securing Declaration, in accordance with ITT 19.1;
d) Alternative Tender, if permissible, in accordance with ITT 13;
e) Authorization: written confirmation authorizing the signatory of the Tender to commit the Tenderer, in accordance with ITT 20.3;
f) Qualifications: documentary evidence in accordance with ITT 17 establishing the Tenderer's qualifications to perform the Contract if its Tender is accepted;
g) Conformity: a technical proposal in accordance with ITT 16;
h) Any other document required in the TDS.

11.2 In addition to the requirements under ITT 11.1, Tenders submitted by a JV shall include a copy of the Joint Venture Agreement entered into by all members. Alternatively, a letter of intent to execute a Joint Venture Agreement in the event of a successful Tender shall be signed by all members and submitted with the Tender, together with a copy of the proposed JV Agreement. Change of membership and conditions of the JV prior to contract signature will render the tender liable for disqualification.

12. Form of Tender and Schedules

12.1 The Form of Tender and Schedules, including the Bill of Quantities, shall be prepared using the relevant forms furnished in Section IV, Tendering Forms. The forms must be completed without any alterations to the text, and no substitutes shall be accepted except as provided under ITT 20.3. All blank spaces shall be filled in with the information requested. The Tenderer shall chronologically serialize all pages of the tender documents submitted.

12.2 The Tenderer shall furnish in the Form of Tender information on commissions and gratuities, if any, paid or to be paid to agents or any other party relating to this Tender.

13. Alternative Tenders

13.1 Unless otherwise specified in the TDS, alternative Tenders shall not be considered.

13.2 When alternative times for completion are explicitly invited, a statement to that effect will be included in the **TDS**, and the method of evaluating different alternative times for completion will be described in Section III, Evaluation and Qualification Criteria.

13.3 Except as provided under ITT13.4 below, Tenderers wishing to offer technical alternatives to the requirements of the Tender Documents must first price the Procuring Entity's design as described in the Tender Documents and shall further provide all information necessary for a complete evaluation of the alternative by the Procuring Entity, including drawings, design calculations, technicalspecifications, breakdown of prices, and proposed construction methodology and other relevant details. Only the technical alternatives, if any, of the Tenderer with the Winning Tender conforming to the basic technical requirements shall be considered by the Procuring Entity.

13.4 When specified in the **TDS**, Tenderers are permitted to submit alternative technical solutions for specified parts of the Works, and such parts will be identified in the **TDS**, as will the method for their evaluating, and described in Section VII, Works' Requirements.

14. Tender Prices and Discounts

14.1 The prices and discounts (including any price reduction) quoted by the Tenderer in the Form of Tender and in the Bill of Quantities shall conform to the requirements specified below.

14.2 The Tenderer shall fill in rates and prices for all items of the Works described in the Bill of Quantities. Items against which no rate or price is entered by the Tenderer shall be deemed covered by the rates for other items in the Bill of Quantities and will not be paid for separately by the Procuring Entity. An item not listed in the priced Bill of Quantities shall be assumed to be not included in the Tender, and provided that the Tender is determined substantially responsive notwithstanding this omission, the average price of the item quoted by substantially responsive Tenderers will be added to the Tender price and the equivalent total cost of the Tender so determined will be used for price comparison.

14.3 The price to be quoted in the Form of Tender, in accordance with ITT 12, shall be the total price of the Tender, including any discounts offered.

14.4 The Tenderer shall quote any discounts and the methodology for their application in the Form of Tender, in accordance with ITT 12

14.5 It will be specified in the **TDS** if the rates and prices quoted by the Tenderer are or are not subject to adjustment during the performance of the Contract in accordance with the provisions of the Conditions of Contract, except in cases where the contract is subject to fluctuations and adjustments, not fixed price. In such a case, the Tenderer shall furnish the indices and weightings for the price adjustment formulae in the Schedule of Adjustment Data and the Procuring Entity may require the Tenderer to justify its proposed indices and weightings.

14.6 Where tenders are being invited for individual lots (contracts) or for any combination of lots (packages), tenderers wishing to offer discounts for the award of more than one Contract shall specify in their Tender the price reductions applicable to each package, or alternatively, to individual Contracts within the package. Discounts shall be submitted in accordance with ITT 14.4, provided the Tenders for all lots (contracts) are opened at the same time.

14.7 All duties, taxes, and other levies payable by the Contractor under the Contract, or for any other cause, as of the date 30 days prior to the deadline for submission of Tenders, shall be included in the rates and prices and the total Tender Price submitted by the Tenderer.

15. Currencies of Tender and Payment

15.1 The currency (ies) of the Tender and the currency (ies) of payments shall be the same.

15.2 Tenderers shall quote entirely in Kenya Shillings. The unit rates and the prices shall be quoted by the Tenderer in the Bill of Quantities, entirely in Kenya shillings

a) A Tenderer expecting to incur expenditures in other currencies for inputs to the Works supplied from outside Kenya (referred to as “the foreign currency requirements”) shall (if so allowed in the **TDS**) indicate in the Appendix to Tender the percentage(s) of the Tender Price (excluding Provisional Sums), needed by the Tenderer for the payment of such foreign currency requirements, limited to no more than two foreign currencies.

b) The rates of exchange to be used by the Tenderer in arriving at the local currency equivalent and the percentage(s) mentioned in (a) above shall be specified by the Tenderer in the Appendix to Tender and shall be based on the exchange rate provided by the Central Bank of Kenya on the date 30 days prior to the actual date of tender opening. Such exchange rate shall apply for all foreign payments under the Contract.

15.3 Tenderers may be required by the Procuring Entity to justify, to the Procuring Entity's satisfaction, their local and foreign currency requirements, and to substantiate that the amounts included in the unit rates and prices and shown in the Schedule of Adjustment Data in the Appendix to Tender are reasonable, in which case a detailed breakdown of the foreign currency requirements shall be provided by Tenderers.

16. Documents Comprising the Technical Proposal

The Tenderer shall furnish a technical proposal including a statement of work methods, equipment, personnel, schedule and any other information as stipulated in Section IV, Tender Forms, insufficient detail to demonstrate the adequacy of the Tenderer's proposal to meet the work's requirements and the completion time.

17. Documents Establishing the Eligibility and Qualifications of the Tenderer

17.1 Tenderers shall complete the Form of Tender, included in Section IV, Tender Forms, to establish Tenderer's eligibility in accordance with ITT 4.

17.2 In accordance with Section III, Evaluation and Qualification Criteria, to establish its qualifications to perform the Contract the Tenderer shall provide the information requested in the corresponding information sheets included in Section IV, Tender Forms.

17.3 If a margin of preference applies as specified in accordance with ITT33. 1, national tenderers, individually or in joint ventures, applying for eligibility for national preference shall supply all information required to satisfy the criteria for eligibility specified in accordance with ITT 33.1.

17.4 Tenderers shall be asked to provide, as part of the data for qualification, such information, including details of ownership, as shall be required to determine whether, according to the classification established by the Procuring Entity, a particular contract or group of contractors qualifies for a margin of preference. Further the information will enable the Procuring Entity identify any actual or potential conflict of interest in relation to the procurement and/or contract management processes, or possibility of collusion between tenderers, and thereby help to prevent any corrupt influence in relation to the procurement process or contract management.

17.5 The purpose of the information described **in ITT 17.2** above overrides any claims to confidentiality which a tenderer may have. There can be no circumstances in which it would be justified for a tenderer to keep information relating to its ownership and control confidential where it is tendering to undertake public sector work and receive public sector funds. Thus, confidentiality will not be accepted by the Procuring Entity as a justification for a Tenderer's failure to disclose, or failure to provide required information on its ownership and control.

17.6 The Tenderer shall provide further documentary proof, information or authorizations that the Procuring Entity may request in relation to ownership and control which information on any changes to the information which was provided by the tenderer under ITT 6.4. The obligations to require this information shall continue for the duration of the procurement process and contract performance and after completion of the contract, if any change to the information previously provided may reveal a conflict of interest in relation to the award or management of the contract.

17.7 All information provided by the tenderer pursuant to these requirements must be complete, current and accurate as at the date of provision to the Procuring Entity. In submitting the information required pursuant to these requirements, the Tenderer shall warrant that the information submitted is complete, current and accurate as at the date of submission to the Procuring Entity.

17.8 If a tenderer fails to submit the information required by these requirements, its tenderer will be rejected. Similarly, if the Procuring Entity is unable, after taking reasonable steps, to verify to a reasonable degree the information submitted by a tenderer pursuant to these requirements, then the tender will be rejected.

17.9 If information submitted by a tenderer pursuant to these requirements, or obtained by the Procuring Entity (whether through its own enquiries, through notification by the public or otherwise), shows any conflict of interest which could materially and improperly benefit the tenderer in relation to the procurement or contract management process, then:

i) If the procurement process is still on going, the tenderer will be disqualified from the procurement process,

ii) If the contract has been awarded to that tenderer, the contract award will be set aside,

iii) The tenderer will be referred to the relevant law enforcement authorities for investigation of whether the tenderer or any other persons have committed any criminal offence.

17.10 If a tenderer submits information pursuant to these requirements that is incomplete, inaccurate or out-of-date, or attempts to obstruct the verification process, then the consequences ITT 17.8 will ensue unless the tenderer can show to the reasonable satisfaction of the Procuring Entity that any such act was not material, or was due to genuine error which was not attributable to the intentional act, negligence or recklessness of the tender.

18. Period of Validity of Tenders

18.1 Tenders shall remain valid for the Tender Validity period specified in the TDS. The Tender Validity period starts from the date fixed for the Tender submission deadline (as prescribed by the Procuring Entity in accordance with ITT 22). A Tender valid for a shorter period shall be rejected by the Procuring Entity as non-responsive.

18.2 In exceptional circumstances, prior to the expiration of the Tender validity period, the Procuring Entity may request Tenderers to extend the period of validity of their Tenders. The request and the responses shall be made in writing. If a Tender Security is requested in accordance with ITT 19, it shall also be extended for thirty (30) days beyond the deadline of the extended validity period. A Tenderer may refuse the request without forfeiting its Tender security. A Tenderer granting their quest shall not be required or permitted to modify its Tender.

19. Tender Security

19.1 The Tenderer shall furnish as part of its Tender, either a **Tender-Securing Declaration** or a **Tender Security** as specified in the **TDS**, in original form and, in the case of a Tender Security, in the amount and currency **specified in the TDS**. A Tender-Securing Declaration shall use the form included in Section IV, Tender Forms.

19.2 If a Tender Security is specified pursuant to ITT19.1, the Tender Security shall be a demand guarantee in any of the following forms at the Tenderer's option:

(i) cash;
(ii) a bank guarantee;
(iii) a guarantee by an insurance company registered and licensed by the Insurance Regulatory Authority listed by the Authority; or
(iv) a guarantee issued by a financial institution approved and licensed by the Central Bank of Kenya, from a reputable source, and an eligible country.

19.3 If an unconditional bank guarantee is issued by a bank located outside Kenya, the issuing bank shall have a correspondent bank located in Kenya to make it enforceable. The Tender Security shall be valid for thirty (30) days beyond the original validity period of the Tender, or beyond any period of extension if requested under ITT 18.2.

19.4 If a Tender Security or Tender-Securing Declaration is specified pursuant to ITT 19.1, any Tender not accompanied by a substantially responsive Tender Security or Tender-Securing Declaration shall be rejected by the Procuring Entity as non-responsive.

19.5 If a Tender Security is specified pursuant to ITT 19.1, the Tender Security of unsuccessful Tenderers shall be returned as promptly as possible upon the successful Tenderer's signing the Contract and furnishing the Performance Security and any other documents required in the TDS.The Procuring Entity shall also promptly return the tender security to the tenderers where the procurement proceedings are terminated, all tenders were determined non-responsive or a bidder declines to extend tender validity period.

19.6 The Tender Security of the successful Tenderer shall be returned as promptly as possible once the successful Tenderer has signed the Contract and furnished the required Performance Security, and any other documents required in the TDS.

19.7 The Tender Security may be forfeited or the Tender-Securing Declaration executed:

a) if a Tenderer withdraws its Tender during the period of Tender validity specified by the Tenderer on the Form of Tender, or any extension there to provided by the Tenderer; or

b) if the successful Tenderer fails to:

i) sign the Contract in accordance with ITT 47; or

ii) Furnish a Performance Security and if required in the TDS, and any other documents required in the TDS.

19.8 Where tender securing declaration is executed, the Procuring Entity shall recommend to the PPRA that PPRA debars the Tenderer from participating in public procurement as provided in the law.

19.9 The Tender Security or the Tender-Securing Declaration of a JV shall be in the name of the JV that submits the Tender. If the JV has not been legally constituted into a legally enforceable JV at the time of tendering, the Tender SecurityortheTender-Securing Declaration shall be in the names of all future members as named in the letter of intent referred to in ITT 4.1 and ITT 11.2.

19.10 A tenderer shall not issue a tender security to guarantee itself.

20. Format and Signing of Tender

20.1 The Tenderer shall prepare one original of the documents comprising the Tender as described in ITT 11 and clearly mark it "ORIGINAL." Alternative Tenders, if permitted in accordance with ITT 13, shall be clearly marked "ALTERNATIVE." Inaddition, the Tenderer shall submit copies of the Tender, in the number **specified in the TDS** and clearly mark them "COPY." In the event of any discrepancy between the original and the copies, the original shall prevail.

20.2 Tenderers shall mark as "CONFIDENTIAL" all information in their Tenders which is confidential to their business. This may include proprietary information, trade secrets, or commercial or financially sensitive information.

20.3 The original and all copies of the Tender shall be typed or written in indelible ink and shall besigned by a person duly authorized to sign on behalf of the Tenderer. This authorization shall consist of a written confirmation as specified in the **TDS** and shall be attached to the Tender. The name and position held bye ach person signing the authorization must be typed or printed below the signature. All pages of the Tender where entries or amendments have been made shall be signed or initialed by the person signing the Tender.

20.4 In case the Tenderer is a JV, the Tender shall be signed by an authorized representative of the JV on behalf of the JV, and so as to be legally binding on all the members as evidenced by a power of attorney signed by their legally authorized representatives.

20.5 Any inter-lineation, erasures, or overwriting shall be valid only if they are signed or initialed by the person signing the Tender.

D. SUBMISSION AND OPENING OF TENDERS

21. Sealing and Marking of Tenders

21.1 The Tenderer shall deliver the Tender in a single sealed envelope, or in a single sealed package, or in a single sealed container bearing the name and Reference number of the Tender, addressed to the Procuring Entity and a warning not to open before the time and date for Tender opening date. Within the single envelope, package or container, the Tenderer shall place the following separate, sealed envelopes:

a) in an envelope or package or container marked "ORIGINAL", all documents comprising the Tender, as describedinITT11; and

b) in an envelope or package or container marked "COPIES" all required copies of the Tender; and

c) if alternative Tenders are permitted in accordance with ITT 13, and if relevant:

i) in an envelope or package or container marked "ORIGINAL - ALTERNATIVE TENDER", the alternative Tender; and

ii) in the envelope or package or container marked "COPIES-ALTERNATIVETENDER", all required copies of the alternative Tender.

The inner envelopes or packages or containers shall:

a Bear the name and address of the Procuring Entity.

b Bear the name and address of the Tenderer; and

c Bear the name and Reference number of the Tender.

21.2 If an envelope or package or container is not sealed and marked as required, the *Procuring Entity* will assume no responsibility for the misplacement or premature opening of the Tender. Tenders that were misplaced or opened prematurely will not be accepted.

22. Deadline for Submission of Tenders

22.1 Tenders must be received by the Procuring Entity at the address specified in the **TDS** and no later than the date and time also specified in the **TDS.** When so specified in the **TDS**, Tenderers shall have the option of submitting their Tenders electronically. Tenderers submitting Tenders electronically shall follow the electronic Tender submission procedures specified in the **TDS**.

22.2 The Procuring Entity may, at its discretion, extend the deadline for the submission of Tenders by amending the Tender Documents in accordance with ITT 8, in which case all rights and obligations of the Procuring Entity and Tenderers previously subject to the deadline shall thereafter be subject to the deadline as extended.

23. Late Tenders

The Procuring Entity shall not consider any Tender that arrives after the deadline for submission of tenders, in accordance with ITT 22. Any Tender received by the Procuring Entity after the deadline for submission of Tenders shall be declared late, rejected, and returned unopened to the Tenderer.

24. Withdrawal, Substitution, and Modification of Tenders

24.1 A Tenderer may withdraw, substitute, or modify its Tender after it has been submitted by sending a written notice, duly signed by an authorized representative, and shall include a copy of the authorization in accordance with ITT 20.3, (except that withdrawal notices do not require copies). The corresponding substitution or modification of the Tender must accompany the respective written notice. All notices must be:

a) prepared and submitted in accordance with ITT 20 and ITT 21 (except that withdrawals notices do not require copies), and in addition, the respective envelopes shall be clearly marked "WITHDRAWAL," "SUBSTITUTION," "MODIFICATION;"and

b) received by the Procuring Entity prior to the deadline prescribed for submission of Tenders, in accordance with ITT 22.

24.2 Tenders requested to be withdrawn in accordance with ITT 24.1 shall be returned unopened to theTenderers.

24.3 No Tender may be withdrawn, substituted, or modified in the interval between the deadline for submission of Tenders and the expiration of the period of Tender validity specified by the Tenderer on the Form of Tender or any extension thereof.

25. Tender Opening

25.1 Except in the cases specified in ITT 23 and ITT 24.2, the Procuring Entity shall publicly open and read out all Tenders received by the deadline, at the date, time and place specified **in the TDS**, in the presence of Tenderers' designated representatives and anyone who chooses to attend. Any specific electronic Tender opening procedures required if electronic Tendering is permitted in accordance with ITT 22.1, shall be as specified in the **TDS.**

25.2 First, envelopes marked "WITHDRAWAL" shall be opened and read out and the envelopes with the corresponding Tender shall not be opened but returned to the Tenderer. No Tender withdrawal shall be permitted unless the corresponding withdrawal notice contains a valid authorization to request the withdrawal and is read out at tender opening.

25.3 Next, envelopes marked "SUBSTITUTION" shall be opened and read out and exchanged with the corresponding Tender being substituted, and the substituted Tender shall not be opened, but returned to the Tenderer. No Tender substitution shall be permitted unless the corresponding substitution notice contains a valid authorization to request the substitution and is read out at Tender opening.

25.4 Next, envelopes marked “MODIFICATION” shall be opened and read out with the corresponding Tender.No Tender modification shall be permitted unless the corresponding modification notice contains a valid authorization to request the modification and is read out at Tender opening.

25.5 Next, all remaining envelopes shall be opened on eata time, reading out: the name of the Tenderer and whether there is a modification; the total Tender Price, per lot (contract) if applicable, including any discounts and alternative Tenders; the presence or absence of a Tender Security or Tender-Securing Declaration, if required; and any other details as the Procuring Entity may consider appropriate.

25.6 Only Tenders, alternative Tenders and discounts that are opened and read out at Tender opening shall be considered further for evaluation. The Form of Tender and pages of the Bill of Quantities (to be decided on by the tender opening committee) are to be initialed by the members of the tender opening committee attending the opening.

25.7 At the Tender Opening, the Procuring Entity shall neither discuss the merits of any Tender nor reject any Tender (except for late Tenders, in accordance with ITT 23.1).

25.8 The Procuring Entity shall prepare minutes of the Tender Opening that shall include, as a minimum:

a) The name of the Tenderer and whether there is a withdrawal, substitution, or modification;
b) The Tender Price, per lot (contract) if applicable, including any discounts;
c) any alternative Tenders;
d) the presence or absence of a Tender Security, if one was required.
e) number of pages of each tender document submitted.

25.9 The Tenderers' representatives who are present shall be requested to sign the minutes. The omission of a Tenderer's signature on the minutes shall not invalidate the contents and effect of the minutes. A copy of tender opening register shall be issued to a tenderer upon request.

E. Evaluation and Comparison of Tenders

26. Confidentiality

26.1 Information relating to the evaluation of Tenders and recommendation of contract award shall not be disclosed to Tenderers or any other persons not officially concerned with the Tender process until information on Intention to Award the Contract is transmitted to all Tenderers in accordance with ITT 43.

26.2 Any effort by a Tenderer to influence the Procuring Entity in the evaluation of the Tenders or Contract award decisions may result in the rejection of its tender.

26.3 Notwithstanding ITT 26.2, from the time of tender opening to the time of contract award, if a tenderer wishes to contact the Procuring Entity on any matter related to the tendering process, it shall do so in writing.

27. Clarification of Tenders

27.1 To assist in the examination, evaluation, and comparison of the tenders, and qualification of the tenderers, the Procuring Entity may, at its discretion, ask any tenderer for a clarification of its tender, given a reasonable time for a response. Any clarification submitted by a tenderer that is not in response to a request by the Procuring Entity shall not be considered. The Procuring Entity's request for clarification and the response shall be in writing. No change, including any voluntary increase or decrease, in the prices or substance of the tender shall be sought, offered, or permitted, except to confirm the correction of arithmetic errors discovered by the Procuring Entity in the evaluation of the tenders, in accordance with ITT 31.

27.2 If a tenderer does not provide clarifications of its tender by the date and time set in the Procuring Entity's request for clarification, its Tender may be rejected.

28. Deviations, Reservations, and Omissions

28.1 During the evaluation of tenders, the following definitions apply:

a) “Deviation” is a departure from the requirements specified in the tender document;

b) "Reservation" is the setting of limiting conditions or withholding from complete acceptance of the requirements specified in the tender document; and

c) "Omission" is the failure to submit part or all of the information or documentation required in the Tender document.

29. Determination of Responsiveness

29.1 The Procuring Entity's determination of a Tender's responsiveness is to be based on the contents of thetender itself, as defined in ITT 11.

29.2 A substantially responsive Tender is one that meets the requirements of the Tender document without material deviation, reservation, or omission. A material deviation, reservation, or omission is one that, if accepted, would:

a) Affect in any substantial way the scope, quality, or performance of the Works specified in the Contract; or

b) limit in any substantial way, inconsistent with the tender document, the Procuring Entity's rights or the tenderer's obligations under the proposed contract; or

c) if rectified, would unfairly affect the competitive position of other tenderers presenting substantially responsive tenders.

29.3 The Procuring Entity shall examine the technical aspects of the tender submitted in accordance with ITT 16, to confirm that all requirements of Section VII, Works' Requirements have been met without any material deviation, reservation or omission.

29.4 If a tender is not substantially responsive to the requirements of the tender document, it shall be rejected by the Procuring Entity and may not subsequently be made responsive by correction of the material deviation, reservation, or omission.

30. Non-material Non-conformities

30.1 Provided that a tender is substantially responsive, the Procuring Entity may waive any non-conformities in the tender.

30.2 Provided that a Tender is substantially responsive, the Procuring Entity may request that the tenderer submit the necessary information or documentation, within a reasonable period of time, to rectify nonmaterial non-conformities in the tender related to documentation requirements. Requesting information or documentationon such non-conformities shall not be related to any aspect of the price of the tender. Failure of the tenderer to comply with the request may result in the rejection of its tender.

30.3 Provided that a tender is substantially responsive, the Procuring Entity shall rectify quantifiable nonmaterial non-conformities related to the Tender Price. To this effect, the Tender Price shall be adjusted, for comparison purposes only, to reflect the price of a missing or non-conforming item or component in the manner specified **in the TDS.**

31. Arithmetical Errors

31.1 The tender sum as submitted and read out during the tender opening shall be absolute and final and shall not be the subject of correction, adjustment or amendment in anyway by any person or entity.

31.2 Provided that the Tender is substantially responsive, the Procuring Entity shall handle errors on the following basis:

a) Any error detected if considered a major deviation that affects the substance of the tender, shall lead to disqualification of the tender as non-responsive.

b) Any errors in the submitted tender arising from a miscalculation of unit price, quantity, sub total and total bid price shall be considered as a major deviation that affects the substance of the tender and shall lead to disqualification of the tender as non-responsive. and

c) If there is a discrepancy between words and figures, the amount in words shall prevail

31.3 Tenderers shall be notified of any error detected in their bid during the notification of award.

32. Conversion to Single Currency

For evaluation and comparison purposes, the currency (ies) of the Tender shall be converted into a single currency as specified in the TDS.

33. Margin of Preference and Reservations

33.1 A margin of preference may be allowed only when the contract is open to international competitive tendering where foreign contractors are expected to participate in the tendering process and where the contract exceeds the value/threshold specified in the Regulations.

33.2 A margin of preference shall not be allowed unless it is specified so in the **TDS**.

33.3 Contracts procured on basis of international competitive tendering shall not be subject to reservations exclusive to specific groups as provided in ITT 33.4.

33.4 Where it is intended to reserve a contract to a specific group of businesses (these groups are Small and Medium Enterprises, Women Enterprises, Youth Enterprises and Enterprises of persons living with disability, as the case may be), and who are appropriately registered as such by the authority to be specified in the **TDS**, a procuring entity shall ensure that the invitation to tender specifically indicates that only businesses or firms belonging to the specified group are eligible to tender. No tender shall be reserved to more than one group. If not so stated in the Invitation to Tender and in the Tender documents, the invitation to tender will be open to all interested tenderers.

34. Nominated Subcontractors

34.1 **Unless** otherwise stated **in the TDS,** the Procuring Entity does not intend to execute any specific elements of the Works by subcontractors selected/nominated by the Procuring Entity. Incase the Procuring Entity nominates a subcontractor, the subcontract agreement shall be signed by the Subcontractor and the Procuring Entity. The main contract shall specify the working arrangements between the main contractor and the nominated subcontractor.

34.2 Tenderers may propose subcontracting upto the percentage of total value of contracts or the volume of works as specified **in the TDS**. Subcontractors proposed by the Tenderer shall be fully qualified for their parts of the Works.

34.3 Domestic subcontractor's qualifications shall not be used by the Tenderer to qualify for the Works unless their specialized parts of the Works were previously designated so by the Procuring Entity **in the TDS** as can be met by subcontractors referred to hereafter as 'Specialized Subcontractors', in which case, the qualifications of the Specialized Subcontractors proposed by the Tenderer may be added to the qualifications of the Tenderer.

35. Evaluation of Tenders

35.1 The Procuring Entity shall use the criteria and methodologies listed in this ITT and Section III, Evaluation and Qualification Criteria. No other evaluation criteria or methodologies shall be permitted. By applying the criteria and methodologies the Procuring Entity shall determine the Lowest Evaluated Tender in accordance with ITT 40.

35.2 To evaluate a Tender, the Procuring Entity shall consider thefollowing:

a) Price adjustment in accordance with ITT 31.1(iii); excluding provisional sums and contingencies, if any, but including Day work items, where priced competitively;

b) Price adjustment due to discounts offered in accordance with ITT 14.4;

c) converting the amount resulting from applying (a) and (b) above, if relevant, to a single currency in accordance with ITT 32;

d) price adjustment due to quantifiable non material non-conformities in accordance with ITT 30.3; and

e) any additional evaluation factors specified **in the TDS** and Section III, Evaluation and Qualification Criteria.

35.3 The estimated effect of the price adjustment provisions of the Conditions of Contract, applied over the period of execution of the Contract, shall not be considered intender evaluation.

35.4 Where the tender involves multiple lots or contracts, the tenderer will be allowed to tender for one or more lots (contracts). Each lot or contract will be evaluated in accordance with ITT 35.2. The methodology to determine the lowest evaluated tenderer or tenderers based one lot (contract) or based on a combination of lots (contracts), will be specified in Section III, Evaluation and Qualification Criteria. In the case of multiple lots or contracts, tenderer will be will be required to prepare the Eligibility and Qualification Criteria Form for each Lot.

36. Comparison of Tenders

The Procuring Entity shall compare the evaluated costs of all substantially responsive Tenders established in accordance with ITT 35.2 to determine the Tender that has the lowest evaluated cost.

37. Abnormally Low Tenders and Abnormally High Tenders Abnormally Low Tenders

37.1 An Abnormally Low Tender is one where the Tender price, in combination with other elements of the Tender, appears so low that it raises material concerns as to the capability of the Tenderer in regards to the Tenderer's ability to perform the Contract for the offered Tender Price or that genuine competition between Tenderers is compromised.

37.2 In the event of identification of a potentially Abnormally Low Tender, the Procuring Entity shall seek written clarifications from the Tenderer, including detailed price analyses of its Tender price in relation to the subject matter of the contract, scope, proposed methodology, schedule, allocation of risks and responsibilities and any other requirements of the Tender document.

37.3 After evaluation of the price analyses, in the event that the Procuring Entity determines that the Tenderer has failed to demonstrate its capability to perform the Contract for the offered Tender Price, the Procuring Entity shall reject the Tender.

Abnormally High Tenders

37.4 An abnormally high tender price is one where the tender price, in combination with other constituent elements of the Tender, appears unreasonably too high to the extent that the Procuring Entity is concerned that it (the Procuring Entity) may not be getting value for money or it may be paying too high a price for the contract compared with market prices or that genuine competition between Tenderers is compromised.

37.5 Incase of an abnormally high price, the Procuring Entity shall make a survey of the market prices, check if the estimated cost of the contract is correct and review the Tender Documents to check if the specifications, scope of work and conditions of contract are contributory to the abnormally high tenders. The Procuring Entity may also seek written clarification from the tenderer on the reason for the high tender price. The Procuring Entity shall proceed as follows:

(i) If the tender price is abnormally high based on wrong estimated cost of the contract, the Procuring Entity may accept or not accept the tender depending on the Procuring Entity's budget considerations.
(ii) If specifications, scope of work and/or conditions of contract are contributory to the abnormally high tender prices, the Procuring Entity shall reject all tenders and may retender for the contract based on revised estimates, specifications, scope of work and conditions of contract, as the case may be.

37.6 If the Procuring Entity determines that the Tender Price is abnormally too high because genuine competition between tenderers is compromised (*often due to collusion, corruption or other manipulations*), the Procuring Entity shall reject all Tenders and shall institute or cause competent Government Agencies to institute an investigation on the cause of the compromise, before retendering.

38. Unbalanced and/or Front-Loaded Tenders

38.1 If in the Procuring Entity's opinion, the Tender that is evaluated as the lowest evaluated price is seriously unbalanced and/or front loaded, the Procuring Entity may require the Tenderer to provide written clarifications. Clarifications may include detailed price analyses to demonstrate the consistency of the tender prices with the scope of works, proposed methodology, schedule and any other requirements of the Tender document.

38.2 After the evaluation of the information and detailed price analyses presented by the Tenderer, the Procuring Entity may as appropriate:

a) accept the Tender; or
b) require that the total amount of the Performance Security be increased at the expense of the Tenderer to a level not exceeding a 10% of the Contract Price; or
c) agree on a payment mode that eliminates the inherent risk of the Procuring Entity paying too much for undelivered works; or
d) reject the Tender,

39. Qualifications of the Tenderer

39.1 The Procuring Entity shall determine to its satisfaction whether the eligible Tenderer that is selected as having submitted the lowest evaluated cost and substantially responsive Tender, meets the qualifying criteria specified in Section III, Evaluation and Qualification Criteria.

39.2 The determination shall be based upon an examination of the documentary evidence of the Tenderer's qualifications submitted by the Tenderer, pursuant to ITT 17. The determination shall not take into consideration the qualifications of other firms such as the Tenderer's subsidiaries, parent entities, affiliates, subcontractors (other than Specialized Subcontractors if permitted in the Tender document), or any other firm(s) different from the

Tenderer.

39.3 An affirmative determination shall be a prerequisite for award of the Contract to the Tenderer. A negative determination shall result in disqualification of the Tender, in which event the Procuring Entity shall proceed to the Tenderer who offers a substantially responsive Tender with the next lowest evaluated price to make a similar determination of that Tenderer's qualifications to perform satisfactorily.

40. Lowest Evaluated Tender

Having compared the evaluated prices of Tenders, the Procuring Entity shall determine the Lowest Evaluated Tender. The Lowest Evaluated Tender is the Tender of the Tenderer that meets the Qualification Criteria and whose Tender has been determined to be:

a) Most responsive to the Tender document; and
b) The lowest evaluated price.

41. Procuring Entity's Right to Accept Any Tender, and to Reject Any or All Tenders.

The Procuring Entity reserves the right to accept or reject any Tender and to annul the Tender process and reject all Tenders at any time prior to Contract Award, without there by incurring any liability to Tenderers. Incase of annulment, all Tenders submitted and specifically, Tender securities, shall be promptly returned to the Tenderers.

F. AWARD OF CONTRACT

42. Award Criteria

The Procuring Entity shall award the Contract to the successful tenderer whose tender has been determined to be the Lowest Evaluated Tender**.**

43. Notice of Intention to enter into a Contract

Upon award of the contract and Prior to the expiry of the Tender Validity Period the Procuring Entity shall issue a Notification of Intention to Enter into a Contract/Notification of award to all tenderers which shall contain, at a minimum, the following information:

a) the name and address of the Tenderer submitting the successful tender;
b) The Contract price of the successful tender;
c) A statement of the reason(s) the tender of the unsuccessful tenderer to whom the letter is addressed was unsuccessful, unless the price information in (c) above already reveals the reason;
d) The expiry date of the Standstill Period; and
e) Instructions on how to request a debriefing and/or submit a complaint during the stand still period;

44. Stand still Period

42.1 The Contract shall not be signed earlier than the expiry of a Standstill Period of 14 days to allow any dissatisfied tender to launch a complaint. Where only one Tender is submitted, the Standstill Period shall not apply.

42.2 Where a Standstill Period applies, it shall commence when the Procuring Entity has transmitted to eachTenderer the Notification of Intention to Enter into a Contract with the successful Tenderer.

45. Debriefing by the Procuring Entity

45.1 On receipt of the Procuring Entity's Notification of Intention to Enter into a Contract referred to in ITT 43, an unsuccessful tenderer may make a concern regarding their tender. The Procuring Entity shall provide the debriefing within five days of receipt of the request.

45.2 Debriefings of unsuccessful Tenderers may be done in writing or verbally. The Tenderer shall bear its own costs of attending such a debriefing meeting.

46. Letter of Award

Prior to the expiry of the Tender Validity Period and upon expiry of the Standstill Period specifiedin ITT 42.1, upon addressing a complaint that has been filed within the Standstill Period, the Procuring Entity shall transmit the Letter of Award to the successful Tenderer. The letter of award shall request the successful tenderer to furnish the Performance Security within 21 days of the date of the letter.

47. Signing of Contract

47.1 Upon the expiry of the fourteen days of the Notification of Intention to enter into contract and upon the parties meeting their respective statutory requirements, the Procuring Entity shall send the successful Tenderer the Contract Agreement.

47.2 Within fourteen (14) days of receipt of the Contract Agreement, the successful Tenderer shall sign, date, and return it to the Procuring Entity.

47.3 The written contract shall be entered into within the period specified in the notification of award and before expiry of the tender validity period.

48. Performance Security

48.1 Within twenty-one (21) days of the receipt of the Letter of Award from the Procuring Entity, the successful Tenderer shall furnish the Performance Security and, any other documents required in the **TDS**, in accordance with the General Conditions of Contract, subject to ITT 38.2 (b), using the Performance Security and other Forms included in Section X, Contract Forms, or another form acceptable to the Procuring Entity. A foreign institution providing a bank guarantee shall have a correspondent financial institution located in Kenya, unless the Procuring Entity has agreed in writing that a correspondent bank is not required.

48.2 Failure of the successful Tenderer to submit the above-mentioned Performance Security and other documents required in the**TDS** or sign the Contract shall constitute sufficient grounds for the annulment of the award and forfeiture of the Tender Security. In that event the Procuring Entity may award the Contract to the Tenderer offering the next Best Evaluated Tender.

48.3 Performance security shall not be required for contract sestimated to cost less than the amount specified in the Regulations.

49. Publication of Procurement Contract

Within fourteen days after signing the contract, the Procuring Entity shall publish the awarded contract at its notice boards and websites; and on the Website of the Authority. At the minimum, the notice shall containthe following information:

a) Name and address of the Procuring Entity;
b) Name and reference number of the contract being awarded, a summary of its scope and the selection method used;
c) The name of the successful Tenderer, the final total contract price, the contract duration.
d) Dates of signature, commencement and completion of contract;
e) Names of all Tenderers that submitted Tenders, and their Tender prices as read out at Tender opening.

50. Procurement Related Complaint

The procedures for making Procurement-related Complaints shall be specified in the TDS

SECTION II-TENDER DATA SHEET (TDS)

The following specific data shall complement, supplement, or amend the provisions in the Instructions to Tenderers (ITT). Whenever there is a conflict, the provisions herein shall prevail over those in ITT

A General	
ITT 1.1	The name of the contract is: **……** The reference number of the contract is:……
ITT 2.3	The information made available on competing firms is as follows: **as indicated in ITT and qualification criteria**
ITT 2.4	The firms that provided consulting services for the contract being tendred for are: **N/A**
ITT 3.1	Maximum number of members in the joint venture (JV) shall **NOT BE LIMITED**
ITT 4.14	Amend it to read ITT 3.14
B content of tender document	
ITT 7.1	1. The tenderer will submit any request for clarification in writing at the address: **Regional Director,** **Kenya Rural Roads Authority,** **Kismayo Road,** **P.O Box 1391-70100, Garissa, Kenya**. To reach the procuring entity not later than **seven (7) days to bid opening.** 2. The procuring entity will publish its responses at the website: **https://www.kerra.go.ke**
ITT 7.2	There shall be no Pre-Tender site meeting,however, pre-tender site visit is MANDATORY and bidders are required to make their own arrangements to visit site to quoting for the tender.
ITT 7.3	**NOT APPLICABLE**
ITT 7.5	The Procuring Entity's website where Minutes of the pre-Tender meeting and the pre- arranged pretender will be published is **https://www.kerra.go.ke**
C. Preparation of Tenders	
ITP 11.1(h)	The Tenderer shall submit the following additional documents in its Tender: **[list any additional document not already listed in ITT 31.1 that must be submitted with the Tender.**

Item No.	Evaluation Criteria / Condition / Requirement Description
(A)	**PRELIMINARY EVALUATION CRITERIA**
1)	The tender doesn't require **Tender Security;** and if it falls under special group reserved category then bidder shall furnish the Procuring entity with **Tender Securing Decleration.** **a) A bank guarantee;** **b) A guarantee by an insurance company registered and licensed by the insurance regulatory authority listed by the authority; or** **c) A guarantee issued by a financial institution approved and licensed by the central bank of Kenya, from a reputable source, and an eligible country.** **N/B This form of tender security (tender bond) is not applicable.**
2)	**Properly and dully filled, signed and stamped Form of Bid and Appendix to Form of Bid by the authorized person through the power of attorney. with a bid validity One hundred and Eighty (180) days, from the specified date of bid opening.** **In addition:** *B)* **The Tenderer must prepare this Form of Tender on stationery with its letterhead clearly showing the Tenderer's complete name and business address.** *C)* **The Form of Tender shall include the following Forms duly completed and signed by the Tenderer.** **a) Properly and dully filled, signed and stamped Tenderer's Eligibility; Confidential Business Questionnaire – to establish we are not in any conflict to interest.** **b) Properly and dully filled, signed and stamped Certificate of Independent Tender Determination – to declare that we completed the tender without colluding with other tenderers.**

			c) Properly and dully filled, signed and stamped Self-Declaration of the Tenderer– to declare that we will, if awarded a contract, not engage in any form of fraud and corruption. **d) Properly and dully filled, signed and stamped Declaration and commitment to the Code of Ethics for Persons Participating in Public Procurement and Asset Disposal 2015.** **e) Bidders shouldn't alter the format and forms of the document; any alteration shall lead to disqualification of the bid.** *D)* **Person signing the Tender shall have the power of attorney given by the Tenderer to be attached with the Tender.**
	3)		Properly and dully filled, signed and stamped Approximate Weightings for Price Adjustment. (Under SECTION IX - special conditions of contract)
	4)		Certificate of Incorporation by Registrar of Companies.
	5)		**Certified Current (dated within 12 Months before date of opening) Certified CR12 Certificate from the Registrar of Companies. This should be provided with Identification Documents of Directors and all individuals listed on the CR12. (ID or Passport). For Corporate Directors, CR12 or ist equivalent for the corporate directors, Identification Documents for the corporate Director and its directors MUST be provided.**
	6)		Valid certified Current Single Business permit.
	7)		Valid Tax Compliance Certificate.
	8)		**Current Certificate of Registration with National Construction Authority in the Category "NCA - 6 or 7 or 8 together with a valid NCA practicing license.**
	9)		Pre-Tender Site Visit Certificate duly endorsed by the **Authorized KeRRA Staff.**
	10)		Submit a written power of attorney authorizing the signatory of the bid to commit the Bidder Witnessed by a Commissioner of Oaths.
	11)		Chronologically Serialization all the pages of the tender document (this should be sequential in the format of1,2,3,4,5…….) from the first page to the last page.
	12)		The Tender submission **SHALL** be as follows: a) One Original clearly marked "**ORIGINAL**", b) One hard copy **CLEARLY** marked "**COPY**"and c) A "**DIGITAL** "copy- **N/A.**
	13)		Provide Properly and dully filled, signed and stamped a proof of Eligible Goods, Equipment, and Services (Bidders to demonstrate that Goods, equipment and services to be supplied under the contract to have their origin in any country that is not determined ineligible under ITT 4.1).
	14)		Provide a Properly and dully filled, signed and stamped proof of having not been declared ineligible by the PPRA as described in ITT 3.7
	15)		Submission of Audited Accounts or equivalent acceptable to the Employer, for the last three [3] years to demonstrate: the current soundness of the applicant's financial position and its prospective long-term profitability, and capacity to have a cash flow amount, turnover and working capital-**Not applicable to special category of bidders and newly registered firms.**
	16)		Provide a Properly and dully filled, signed and stamped **Bill of Quantities.**
	17)		Provide a Properly and dully filled, signed and stamped**, the following schedules of supplementary information.** **NOTE: That bidders should not alter the format of any of the forms under this section. Any alteration shall lead to disqualification of the bid.**
	1)	FORM EQU: 2	Properly and dully filled, signed and stamped form of Equipment **(A separate Form shall be prepared for each item of equipment listed, or for alternative equipment proposed by the Tenderer)**
	2)	FORM PER: 3	Properly and dully filled, signed and stamped Contractor's Representative and Key Personnel Schedule **(Tenderers should provide the names and details of the suitably qualified Contractor's Representative and Key Personnel to perform the Contract separately for each personnel/ candidate; with declaration for both parties; data on their experience should be provided).**
	3)	FORM 4:	Properly and dully filled, signed and stamped form of tenderers qualification without pre-qualification. **FORM ELI-1.1 (Properly and dully filled, signed and stamped form of Tenderer Information)** Attach copies of original documents of [check the box(es) of the attached original documents]

kkkkk

			1) **Articles of incorporation (or equivalent documents of constitution or association), and /or documents of registration of the legal entity named above, in accordance with ITT 4.4.** 2) **A current tax clearance certificate or tax exemption certificate issued by the Kenya Revenue Authority, if tender is a Kenyan tenderer, in accordance with ITT 4.15.** 3) **In case of state-owned enterprise or institution, in accordance with ITT 4.6 documents establishing: Included are the organizational chart, a list of Board of Directors, and the beneficial ownership.**
	4)	FORM ELI-1.1	Properly and dully filled, signed and stamped form of Tenderer Information.
	5)	FORM ELI-1.2	Properly and dully filled, signed and stamped of Tenderer's JV Information Form **(To be completed for each member of Tenderer's JV)**
	6)	FORM CON– 2	Properly and dully filled, signed and stamped form of Historical Contract Non-Performance, Pending Litigation and Litigation History.
	7)	FORM FIN –3.1	Properly and dully filled, signed and stamped of Financial Situation and Performance. Properly and dully filled, signed and stamped form of Sources of Finance Properly and dully filled, signed and stamped form of Financial documents.
	8)	FORM FIN – 3.2	Properly and dully filled, signed and stamped form of Average Annual Construction Turnover.
	9)	FORM FIN –3.3	Properly and dully filled, signed and stamped form of Financial Resources.
	10)	FORM FIN-3.4	Properly and dully filled, signed and stamped form of Current Contract Commitments / Works in Progress.
	11)	FORM EXP-4.1	Properly and dully filled, signed and stamped form of General Construction Experience.
	12)	FORM EXP -4.2(a)	Properly and dully filled, signed and stamped of Specific Construction and Contract Management Experience.
	13)	FORM EXP -4.2(b)	Properly and dully filled, signed and stamped form of Construction Experience in Key Activities **(All Sub-contractors for key activities must complete the information in this form as per ITT 34 and Section III, Evaluation and Qualification Criteria, Sub-Factor 4.2.)**
	14)	FORM SD1:	Properly and dully filled, signed and stamped form of Self-declaration that the person/tenderer is not debarred in the matter of the public procurement and asset disposal act 2015.
	15)		Must submit APPENDIX 1 form of -fraud and corruption must be attached **(Appendix 1 shall not be modified).**
	B) TECHNICAL EVALUATION CRITERIA		
	18)	**Submit Site Organization** […….....]	
	19)	**Submit Relevant Method Statement [**……..]	
	20)	**Submit Relevant Mobilization Schedule [**……**]**	
	21)	**Submit Relevant Construction Schedule [**……**]**	
	22)	**Properly and dully filled, signed and stamped Declaration of Current ongoing Works-N/A**	
		Attach Properly and dully filled, signed and stamped proof of equipment holding in the format provided.	
	23)	Properly and dully filled, signed and stamped History of Non- Performing Contracts **Non-performance of a contract did not occur within the last One (1) year prior to the deadline for application submission based on all information on fully settled disputes or litigation. A fully settled dispute or litigation is one that has been resolved in accordance with the Dispute Resolution Mechanism under the respective contract, and where all appeal instances available to the applicant have been exhausted).**	
	24)	Properly and dully filled, signed and stamped Pending Litigation **(All pending litigation shall in total not represent more than thirty percent (30%) of the Applicant's net worth and shall be treated as resolved against the Applicant.)**	
	25)	Properly and dully filled, signed and stamped General Construction Experience **(Experience**	

		under construction contracts in the role of contractor, subcontractor, or management contractor for at least the last One (1) year prior to the applications submission deadline).	
26)		Properly and dully filled, signed and stamped Specific Construction Experience **(Participation as contractor, management contractor or subcontractor, in at least Two (2) contracts within the last Five (5) Years Each of a value of at least Kshs One (1) Million that has been successfully and substantially completed and that is similar to the proposed works. The similarity shall be based on the physical size, complexity, methods/technology or other characteristics as described)** a) For subcontracted Works the Bidder should provide the following: ✓ Award letter of the Main Contractor ✓ Award letter of the sub-contract ✓ Completion letter of the Sub-contract ✓ Proof of payment (attach payment certificates and certified bank statements b) For the above or other contracts executed during the period stipulated in 4.2(a) above, a minimum construction experience in at least one (1) of: ✓ **Site Clearance.** ✓ **Earthworks.** ✓ **Grading and Gravelling.**	
27)		Provide proof that the site staff possess minimum levels set below;	
	Site Agent	Qualification- Dip in Civil Eng. General Experience- 10yrs Specific Experience- 7yrs	
	Dep. Site Agent / Site Engineer	Qualification- Dip in Civil Eng. General Experience- 10yrs Specific Experience- 7yrs	
	Senior Foreman	Qualification- Dip in Civil Eng. General Experience- 6yrs Specific Experience- 4yrs	
	Site Surveyor	Qualification- Dip in Civil Eng. General Experience- 6yrs Specific Experience- 4yrs	
	Foremen	Qualification- Dip in Civil Eng. General Experience- 3yrs Specific Experience- 1yrs	
C) FINANCIAL EVALUATION CRITERIA			
28)	Working Capital	Submission of audited accounts or if not required by the law of the applicant's country, other financial statements acceptable to the Employer, for the last **Three [3] years** to demonstrate: (a) the current soundness of the applicants' financial position and its prospective long-term profitability, and (b) capacity to have a cash flow amount of min. **Kshs.Five (500,000) hundred thousand)** equivalent of working capital. A line of credit to be considered if submitted.	
29)	Average annual construction turnover	Minimum average annual construction turnover of **Kshs.One (1) Millon** calculated as total certified payments received for contracts in progress or completed, within the last **three (3) years.**	
D) MARGIN OF PREFERENCE AND RESERVATIONS			
		Procuring Entity will grant a margin of preference in accordance to Clause 147 and 148 respectively of the PPADR 2020 citizen contractor registered outside Kenya shall only be eligible to benefit from the preferences and reservations scheme when bidding in international tendering and competition. For international/Open Tenders, a margin of preference shall be applied as follows: -	
	Group A:	**Ten percent (10%) margin of preference of the evaluated price of the tender, where the percentage of shareholding of Kenyan citizens is more than fifty percent (50%);**	
	Group B:	**Eight percent (8%) margin of preference of the evaluated price of the tender, where the percentage of shareholding of Kenyan citizens is less than fifty**	

		percent (50%) but above twenty percent (20%); and
	Group C:	**Six percent (6%) margin of preference of the evaluated price of the tender, where percentage of shareholding of Kenyan citizens is above five percent (5%) and less than twenty percent (20%).**
E) ERROR CHECK		
30)	✓ The tender sum as submitted and read out during the tender opening shall be absolute and final and shall not be the subject of correction, adjustment or amendment in anyway by any person or entity. ✓ Provided that the Tender is substantially responsive, the Procuring Entity shall handle errors on the following basis:	
	A. Any error detected if considered a major deviation that affects the substance of the tender, shall lead to disqualification of the tender as non-responsive.	
	B. Any errors in the submitted tender arising from a miscalculation of unit price, quantity, subtotal and total bid price shall be considered as a major deviation that affects the substance of the tender and shall lead to disqualification of the tender as non-responsive. and	
	C. If there is a discrepancy between words and figures, the amount in words shall prevail	
	D. Abnormally low tenders, abnormally high tenders or any other indications of potential bid rigging practices, and tenders that are front loaded.	
F) POST QUALIFICATION AND CONTRACT AWARD		
	A. The Tenderer shall demonstrate that it has access to, or has available, liquid assets, unencumbered real assets, lines of credit, and other financial means (independent of any contractual advance payment) sufficient to meet the construction cash flow **as per the provisions of the Qualification**	
	B. Minimum average annual turnover as per the provisions of the Qualification Criteria Matrix.	
	C. Specific experience requirement as per the provisions of the Qualification Criteria Matrix.	

ITT 11.2	In addition, Tenders submitted by a joint venture of two or more firms as partners shall comply with the following requirements: - 1) **The tender, and in case of a successful tender, the Form of Agreement, shall be signed so as to be legally binding on all partners.** 2) **One of the partners shall be nominated as being in charge, and this authorization shall be evidenced by submitting a power of attorney signed by legally authorized signatories of all the partners.** 3) **The partner in charge shall be authorized to incur liabilities and receive instructions for an on behalf ɗany and all partners of the joint venture and the entire execution of the Contract including payment shall be done exclusively with the partner in charge.** 4) **All partners of the joint venture shall be liable jointly and severally for the execution of the Contractin accordance with the Contract terms, and a relevant statement to this effect shall be included in the authorization mentioned under (b) above as well as in the Form of Tender and the Form of Agreement (in case of a successful tender).** **A copy of the agreement entered into by the joint venture partners shall be submitted with the tender.**
ITT 13.1	No Alternative Tenders shall be accepted.
ITT 13.2	**Not Applicable.**
ITT 13.3	**Not Applicable.**
ITT 13.4	Alternative technical solutions shall be permitted for the following parts of the Works: **NOT PERMITED**
ITT 14.5	No price variations shall be allowed dring performance of the Contract until 12months have elapsed since the contract's effective start date.
ITT 15.2	Foreign currency requirement :(allowed/not allowed**): NOT ALLOWED.**

ITT 18.1	The Tender validity period shall be **180 days from the date of bid opening.**
ITT 19.1	A Tender Security: - **NOT REQUIRED.** ATender-Securing Declaration: - **SHALL BE REQUIRED.** If a Tender Security shall be required, the amount and currency of the Tender Security shall be **Kshs.Two(200) hundred thousand shillings 200,000.00**
ITT 19.2	Acceptable Tender Securities **SHALL** be in the form of: i. a **Demand Bank Guarantee** in the prescribed format; ii. a Guarantee by an Insurance Company registered and licensed by the Insurance RegulatoryAuthority listed by the Authority;
ITT 19.8	**Not Applicable**
ITT 19.9	**Not Applicable**
ITT 20.1	The Tender submission **SHALL** be as follows: i) One Original clearly marked "**ORIGINAL",** ii) One hard copy **CLEARLY** marked **"COPY"**and iii) a digital copy-**NOT APPLICABLE.**
ITT 20.3	The written confirmation of authorization to sign on behalf of the Tenderer fot this tender shall consist of: **written Power of Attorney drawn by a commissioner of Oaths**
D. Submission and Opening of Tenders	
	Add ITT 21.3 to read as follows: Atender package or container that cannot fit in the tender box shall be received as follows: Will be delivered to the **Senior Supply Chain Management Officer (Garissa-Region)** for receipt and registration.
ITT 22.1	1. For Tender submission purposes only, the Procuring Entity's address is: as per section ITT 7.1 above. 2. Date and time for submission of Tenders is as indicated in the Tender notice 3. Tenders shall **SHALL NOT BE SUBMITTED** electronically.
ITT 25.1	1. The Tender opening shall take place at: **Regional Director's Boardroom** **Kenya Rural Roads Authority,** **Off Kisimaiyu Road** **P.O Box 1391-70100, Garissa, Kenya.** **Not later than as indicated in the Tender Notice.** 2. There **SHALL BE NO ELECTRONIC** submission of Tenders.
ITT 25.6	The representatives of the procuring entity attending Tender opening. shall initialize the following: the front / cover page, the Form of Tender, Tender Security, Form CR12, Tax Compliance Certificate, summary of the priced Bills of Quantities and the last page attending Tender opening.
E. Evaluation, and Comparison of Tenders	
ITT 30.3	**NOT APPLICABLE**
ITT 32.1	The Tender Currency in the Bid shall be in: **Kenya Shillings and any conversion of currency shall be done by the Bidder in their submission.** The date for the exchange rate shall be: **the deadline date for Submission of the Tenders.**
ITT 33.2	A margin of preference **shall** apply.
ITT 33.4	**NOT APPLICABLE**
ITT 34.2	**NO LIMIT**
ITT 34.3	**NOT APPLICABLE**
ITT 35.4 (d)	**NON-EXISTENT SUB CLAUSE**

kkkkk

ITT 38.2 (b)	Amend the Clause as follows: **The Employer SHALL enhance the Performance Guarantee from 5% to 10% of the Bid Sum 1 if the bid is found to be unbalanced during Notification of Award.**
ITT 44	Amend 42.1 to read 44.1 & 42.2 to read 44.2
ITT 48.2	Additional requirements are: **as provided for in the bid document**
ITT 49.1	**The applicable Sub-Clause shall be Sub-Clause 50 and not 49.1**. The procedures for making a Procurement-related Complaint are available from the **PPRA** website **info@ppra.go.ke** or **complaints@ppra.go.ke.** If a Tenderer wishes to make a Procurement-related Complaint, the Tenderer should submit its complaint following these procedures, in writing (by the quickest means available, that is either by email indicated in the websites above or by hand delivery to PPRA designated offices. In summary, a Procurement-related Complaint may challenge any of the following: **(i) the terms of the Tender Documents; and the Procuring Entity's decision to award the contract.**

SECTION III- EVALUATION AND QUALIFICATION CRITERIA

1. General Provisions;

- This section contains the criteria that the Employer shall use to evaluate tender and qualify tenderers. No other factors, methods or criteria shall be used other than specified in this tender document. The Tenderer shall provide all the information requested in the forms included in Section IV, Tendering Forms. The Procuring Entity shall use **the Standard Tender Evaluation Document for Goods and Works** for evaluating Tenders.

- Wherever a Tenderer is required to state a monetary amount, Tenderers should indicate the Kenya Shilling equivalent using the rate of exchange determined as follows:
  a) For construction turnover or financial data required for each year - Exchange rate prevailing on the last day of the respective calendar year (in which the amounts for that year are to be converted) was originally established.
  b) Value of single contract - Exchange rate prevailing on the date of the contract signature.
  c) Exchange rates shall be taken from the publicly available source identified in the ITT 14.3. Any error in determining the exchange rates in the Tender may be corrected by the Procuring Entity.

- **Evaluation and contract award Criteria;**

  The Procuring Entity shall use the criteria and methodologies listed in this Section to evaluate tenders and arrive at the Lowest Evaluated Tender. The tender that (i) meets the qualification criteria, (ii) has been determined to be substantially responsive to the Tender Documents, and (iii) is determined to have the Lowest Evaluated Tender price shall be selected for award of contract.

2. Preliminary examination for Determination of Responsiveness;

The Procuring Entity will start by examining all tenders to ensure they meet in all respects the eligibility criteria and other requirements in the ITT, and that the tender is complete in all aspects in meeting the requirements of "Part 2 – Procuring Entity's Works Requirements", including checking for tenders with unacceptable errors, abnormally low tenders, abnormally high tenders and tenders that are front loaded. The Standard Tender Evaluation Report for Goods and Works for evaluating Tenders provides clear guidelines on how to deal with review of these requirements. Tenders that do not pass the Preliminary Examination will be considered irresponsive and will not be considered further.

A. PRELIMINARY EXAMINATION

To be qualified for award of Contract, the tenderer shall provide evidence satisfactory to the Employer of their eligibility and of their capability and adequacy of resources to effectively carry out the subject Contract.
To this end, the tenderer shall be required to provide latest information set out below:

Item No.	Evaluation Criteria / Condition / Requirement Description;	Clause Ref.	Requirement Priority
(B)	**PRELIMINARY EVALUATION CRITERIA**		
31)	This tender doesn't require **bid security**. **d) A bank guarantee;** **e) A guarantee by an insurance company registered and licensed by the insurance regulatory authority listed by the authority; or** **f) A guarantee issued by a financial institution approved and licensed by the central bank of Kenya, from a reputable source, and an eligible country.** **N/B This form of tender security (tender bond) is not applicable.**	ITT 19.0 ITT 11.1(c) TDS ITP 11.1 (h) – (5) SECTION III A-(5)	**Not required**
32)	Properly and dully filled, signed and stamped **form of bid** and **appendix to form of bid** by the authorized person through the power of attorney. with a bid validity of One hundred and Eighty **(180)** days. In addition: *E)* The Tenderer must prepare this Form of Tender on stationery with its letterhead clearly showing the Tenderer's complete name and business address. *F)* The Form of Tender shall include the following Forms duly completed and signed by the Tenderer. **f) Properly and dully filled, signed and stamped Tenderer's Eligibility; Confidential Business Questionnaire – to establish we are not in any conflict to interest.** **g) Properly and dully filled, signed and stamped Certificate of Independent Tender Determination – to declare that we completed the tender without colluding with other tenderers.** **h) Properly and dully filled, signed and stamped Self-Declaration of the Tenderer– to declare that we will, if awarded a contract, not engage in any form of fraud and corruption.** **i) Properly and dully filled, signed and stamped Declaration and commitment to the Code of Ethics for Persons Participating in Public Procurement and Asset Disposal 2015.** *G)* Person signing the Tender shall have the power of attorney given by the Tenderer to be attached with the Tender	ITT 19.1 ITT 11.1(a) TDS ITP 11.1 (h) – (9) SECTION III EQC A-(11)	**Must be submitted**
33)	Properly and dully filled, signed and stamped Approximate Weightings for Price Adjustment. (Under SECTION IX - special conditions of contract)	GCC-13.8.4 SECTION IX SCC-(11)	**Must be filled**
34)	Certificate of Incorporation by Registrar of Companies.	ITT 36 ITT 11.1(a) TDS ITP 11.1 (h) – (1) SECTION III EQC A-(1)	**Must be submitted**
35)	Current Certified CR12 Certificate (dated within 12 Months before date of opening) from the Registrar of Companies. This should be provided with Identification Documents of Directors and all individuals listed on the CR12. (ID or Passport). For Corporate Directors, CR12 or its equivalent for the corporate directors, Identification Documents for the corporate Director and its directors MUST be provided.	TDS ITP 11.1 (h) – (2) SECTION III EQC A-(2)	**Must be submitted**
36)	Valid certified Current Single Business permit	TDS ITP 11.1 (h) – (3) SECTION III EQC A-(3)	**Must be submitted.**

kkkkk

Item No.	Evaluation Criteria / Condition / Requirement Description;		Clause Ref.	Requirement Priority
37)	Valid Tax Compliance Certificate.		ITT 4.14 TDS ITP 11.1 (h) – (4) SECTION III EQC A-(4)	**Must be submitted**
38)	Current Certificate of Registration with National Construction Authority in the Category **"NCA - 6 or 7 or 8" together** with a valid NCA practicing license		ITT 3.12 TDS ITP 11.1 (h) – (6) SECTION III EQC A-(6)	**Must be submitted**
39)	Pre-Tender Site Visit Certificate duly endorsed by the Authorized KeRRA Staff.		ITT 7 SECTION III EQC A-(13)	**Must be submitted**
40)	Submit a written power of attorney authorizing the signatory of the bid to commit the Bidder Witnessed by a Commissioner of Oaths.		ITT 20.4 TDS ITP 11.1 (h) – (8) SECTION III EQC A-(7)	**Must be submitted**
41)	Chronologically Serialization all the pages of the tender document (this should be sequential in the format of 1,2,3,4,5…….) from the first page to the last page.		ITT 12.1 TDS ITP 11.1 (h) – (11) SECTION III EQC A-(14)	**Must be Serialized**
42)	The Tender submission **SHALL** be as follows: d) One Original clearly marked "**ORIGINAL**", e) One hard copy CLEARLY marked "**COPY**"and f) A "**DIGITAL** "copy- **NOT APPLICABLE.**		ITT 20.1	**Must be submitted**
43)	Provide Properly and dully filled, signed and stamped a proof of Eligible Goods, Equipment, and Services (Bidders to demonstrate that Goods, equipment and services to be supplied under the contract to have their origin in any country that is not determined ineligible under ITT 4.1).		ITT 4.1 SECTION III EQC A-(18)	**Must be submitted**
44)	Provide a Properly and dully filled, signed and stamped proof of having not been declared ineligible by the PPRA as described in ITT 3.7		ITT 3.7 SECTION III EQC A-(20)	**Must be submitted**
45)	Submission of Audited Accounts or equivalent acceptable to the Employer, for the last **three [3] years** to demonstrate: the current soundness of the applicant's financial position and its prospective long-term profitability, and capacity to have a cash flow amount, turnover and working capital-Not applicable to special group of bidders and newly registered firms.		SECTION III EQC A-(19)	
46)	Provide a Properly and dully filled, signed and stamped **Bill of Quantities**		ITT 11.1 (b) SECTION III EQC A-(9)	**Must be Filled**
47)	Provide a Properly and dully filled, signed and stamped**, the following schedules of supplementary information.** **NOTE:** That bidders should not alter the format of any of the forms under this section. Any alteration shall lead to disqualification of the bid		ITT 17.0 SECTION IV EQC -**(9)**	
16)	FORM 1 FT:	Properly and dully filled, signed and stamped form of foreign tenderers 40% rule (for foreign tenderers)	ITT 3.10; ITT 17.0 SECTION IV EQC -(1) SECTION IIIA EQC –(17) & (9)	**Must be Filled**
17)	FORM 2 EQU:	Properly and dully filled, signed and stamped form of Equipment (A separate Form shall be prepared for each item of equipment listed, or for alternative equipment proposed by the Tenderer)	ITT 16; ITT 17.0 SECTION IV EQC -(4) SECTION IIIA EQC –(23) & (9)	**Must be Filled**
18)	FORM 3	Properly and dully filled, signed and stamped	ITT 6.9; ITT 17.0	**Must be**

Item No.	Evaluation Criteria / Condition / Requirement Description;		Clause Ref.	Requirement Priority
	PER:	Contractor's Representative and Key Personnel Schedule (Tenderers should provide the names and details of the suitably qualified Contractor's Representative and Key Personnel to perform the Contract separately for each personnel/ candidate; with declaration for both parties; data on their experience should be provided).	SECTION IV EQC - (5) SECTION IIIA EQC – (9)	**Filled**
19)	FORM 4:	Properly and dully filled, signed and stamped form of tenderers qualification without pre-qualification. **FORM ELI-1.1 (Properly and dully filled, signed and stamped form of Tenderer Information)** Attach copies of original documents of [check the box(es) of the attached original documents] 1) Articles of incorporation (or equivalent documents of constitution or association), and /or documents of registration of the legal entity named above, in accordance with ITT 4.4. 2) A current tax clearance certificate or tax exemption certificate issued by the Kenya Revenue Authority, if tender s a Kenyan tenderer, in accordance with ITT 4.15. 3) In case of state-owned enterprise or institution, in accordance with ITT 4.6 documents establishing: Included are the organizational chart, a list of Board of Directors, and the beneficial ownership.	ITT 17.0 SECTION IIIA EQC – (9)	**Must be Filled**
20)	FORM ELI-1.1	Properly and dully filled, signed and stamped form of Tenderer Information	ITT 17.0 SECTION IV EQC - (6.1) SECTION IIIA EQC – (9)	**Must be Filled**
21)	FORM ELI-1.2	Properly and dully filled, signed and stamped of Tenderer's JV Information Form (to be completed for each member of Tenderer's JV)	ITT 17.0; ITT 3.1 SECTION IV EQC - (6.2) SECTION IIIA EQC – (9)	**Must be Filled**
22)	FORM CON– 2	Properly and dully filled, signed and stamped form of Historical Contract Non-Performance, Pending Litigation and Litigation History	ITT 17.0 SECTION IV EQC - (6.3) SECTION IIIA EQC – (9)	**Must be Filled**
23)	FORM FIN – 3.1	Properly and dully filled, signed and stamped of Financial Situation and Performance Properly and dully filled, signed and stamped form of Sources of Finance Properly and dully filled, signed and stamped form of Financial documents	ITT 17.0 SECTION IV EQC - (6.4) SECTION IIIA EQC – (9) & (19)	**Must be Filled**
24)	FORM FIN – 3.2	Properly and dully filled, signed and stamped form of Average Annual Construction Turnover	ITT 17.0 SECTION IV EQC - (6.5) SECTION IIIA EQC – (9) & (19)	**Must be Filled**
25)	FORM FIN – 3.3	Properly and dully filled, signed and stamped form of Financial Resources	ITT 17.0 SECTION IV EQC - (6.6) SECTION IIIA EQC – (9) & (19)	**Must be Filled**
26)	FORM FIN-3.4	Properly and dully filled, signed and stamped form of Current Contract Commitments / Works in	ITT 17.0 SECTION IV EQC -	**Must be Filled**

kkkkk

Item No.	Evaluation Criteria / Condition / Requirement Description;		Clause Ref.	Requirement Priority
		Progress	(6.7) SECTION IIIA EQC – (9) & (21)	
27)	FORM EXP-4.1	Properly and dully filled, signed and stamped form of General Construction Experience	ITT 17.0 SECTION IV EQC - (6.8) SECTION IIIA EQC – (9)	**Must be Filled**
28)	FORM EXP - 4.2(a)	Properly and dully filled, signed and stamped of Specific Construction and Contract Management Experience.	ITT 17.0 SECTION IV EQC - (6.9) SECTION IIIA EQC – (9) & (22)	**Must be Filled**
29)	FORM EXP - 4.2(b)	Properly and dully filled, signed and stamped form of Construction Experience in Key Activities (All Sub-contractors for key activities must complete the information in this form as per ITT 34 and Section III, Evaluation and Qualification Criteria, Sub-Factor 4.2.)	ITT 17.0; ITT 34 SECTION IV EQC - (6.10) SECTION IIIA EQC – (9)	**Must be Filled**
30)	FORM SD1:	Properly and dully filled, signed and stamped form of Self-declaration that the person/tenderer is not debarred in the matter of the public procurement and asset disposal act 2015.	ITT 17.0; ITT 2.1; ITT 3.7; SECTION IIIA EQC – (9)	**Must be Filled**
31)		Must submit APPENDIX 1 form of -fraud and corruption must be attached (Appendix 1 shall not be modified).	ITT 17.0; ITT 2.1; SECTION IIIA EQC – (9)	**Must be Submitted**
B) TECHNICAL EVALUATION CRITERIA As Per Qualification Table Below				
C) MARGIN OF PREFERENCE AND RESERVATIONS				
17	Procuring Entity will grant a margin of preference in accordance to Clause 147 and 148 respectively of the PPADR 2020 citizen contractor registered outside Kenya shall only be eligible to benefit from the preferences and reservations scheme when bidding in international tendering and competition. For international/Open Tenders, a margin of preference shall be applied as follows: -		ITT 33	**Must be Submitted**
	Group A:	Ten percent (10%) margin of preference of the evaluated price of the tender, where the percentage of shareholding of Kenyan citizens is more than fifty percent (50%);		
	Group B:	Eight percent (8%) margin of preference of the evaluated price of the tender, where the percentage of shareholding of Kenyan citizens is less than fifty percent (50%) but above twenty percent (20%); and		
	Group C:	Six percent (6%) margin of preference of the evaluated price of the tender, where percentage of shareholding of Kenyan citizens is above five percent (5%) and less than twenty percent (20%).		
D) ERROR CHECK				
48)	✓ The tender sum as submitted and read out during the tender opening shall be absolute and final and shall not be the subject of correction, adjustment or amendment in anyway by any person or entity. ✓ Provided that the Tender is substantially responsive, the Procuring Entity shall handle errors on the following basis:		ITT 31	**Must be Submitted**
	E. Any error detected if considered a major deviation that affects the substance of the tender, shall lead to disqualification of the tender as non-responsive.			

Item No.	Evaluation Criteria / Condition / Requirement Description;	Clause Ref.	Requirement Priority
	F. Any errors in the submitted tender arising from a miscalculation of unit price, quantity, subtotal and total bid price shall be considered as a major deviation that affects the substance of the tender and shall lead to disqualification of the tender as non-responsive. and		
	G. If there is a discrepancy between words and figures, the amount in words shall prevail		
	H. Abnormally low tenders, abnormally high tenders or any other indications of potential bid rigging practices, and tenders that are front loaded.		
E) POST QUALIFICATION AND CONTRACT AWARD			
	D. The Tenderer shall demonstrate that it has access to, or has available, liquid assets, unencumbered real assets, lines of credit, and other financial means (independent of any contractual advance payment) sufficient to meet the construction cash flow **as per the provisions of the Qualification**		
	E. Minimum average annual turnover as per the provisions of the Qualification Criteria Matrix.		
	F. Specific experience requirement as per the provisions of the Qualification Criteria Matrix.	ITT 39	**Must be Submitted**

1) Attach proof of equipment holding in the format provided

DETAILED CAPACITY EXAMINATION

i) Contractor's key equipment listed on the table "Contractor's Equipment" below and more specifically listed as

Item No.	Equipment Details	Minimum Number Required for the execution of the Contract
A) General plant		
	1.Primary/Secondary/Crusher Unit/Power Screen Min capacity 60/hr	**0**
	2. Concrete batching plant Min Cap 20m3/hr	**0**
	Subtotal for A	
B) Bituminous Plants		
	1. Bitumen pressure distributor	**0**
	2. Bitumen heater tank (10,000 litres)	**0**
	3. Asphalt plant	**0**
	4. Paver	**0**
	5. Chip's spreader	**0**
	Subtotal for B	**0**
C) Compactors		
	1.Vibrating compaction plate 300mm wide	**1**
	2.Vibrating compaction plate 600mm wide	**1**
	Subtotal for C	**2**
D) Mobile Compressors		
	1. Medium rock drill (1.5 m3/min)	**0**
	2. Heavy rock drill (1.5 m3/min)	**0**
	Subtotal for D	**0**
E) Concrete Equipment		
	1. Mobile concrete mixers	**0**

kkkkk

Item No.	Equipment Details	Minimum Number Required for the execution of the Contract
	2. Truck mounted mixers	0
	Subtotal for E	0
F) Transport (Tippers, dumpers, water tankers)		
	1. 4x2 tippers payload 7-12 tonnes	4
	2. 6x4 tippers payload 16-20 tonnes	6
	3. Articulated trailers (low loaders)	6
	4. Dump trucks	1
	5. Flatbed lorries	Optional
	6. Water tankers (18,000- 20,000 lts capacity)	Optional
	7. Water tankers (8,000- 10,000 lts capacity)	Optional
	Subtotal for F	15
G) Earth moving equipment		
	1. Tractor dozers with dozer attachment (D6-D9)	1
	2. Tracked loaders	2
	3. Wheel loaders	Optional
	4. Motor scrappers	Optional
	5. Motor graders (93-205KW)	3
	6. Trench excavators	2
	Subtotal for G	8
H) Diesel Generators		
	1. Diesel generators (15- 200KVa)	1
	Subtotal H	1
I) Excavators		
	1. Hydraulic crawler mounted (7-10 tonnes) – 0.25-0.4m3 SAE bucket	1
	2. Hydraulic wheel mounted (10-16 tonnes) – 0.4- 0.6m3 SAE bucket	Optional
	Subtotal for I	1
J) Rollers		
	1. Self-propelled single drum vibrating (various types, 12 tonnes and above)	1
	2. Pneumatic rubber tyre (1- 2 tonnes/wheel)	1
	3. Sheep foot roller	0
	4. Double drum vibrating pedestrian roller	1
	Subtotal for J	5
K) Stabilization		
	1. Pulvimixer	0
	Subtotal for K	0

Qualification Criteria				Compliance Requirements			Documentation
				Joint Venture			
No.	Subject	Requirement	Single Entity	All Parties Combined	Each Party	One Party	Submission Requirements
1. Eligibility							
1.1	Eligibility	Nationality in accordance with Sub- Clause 5.1.	Must meet requirement	Existing or intended JV must meet requirement	Must meet requirement	N / A	
1.2	Conflict of Interest	No conflicts of interest in Sub-Clause 5.2.	Must meet requirement	Existing or intended JV must meet requirement	Must meet requirement	N / A	
1.3	Employer Ineligibility	Not having been declared ineligible by the Employer, as described in Sub-Clause 5.3.	Must meet requirement	Existing JV must meet requirement	Must meet requirement	N / A	
1.4	Incorporation & Registration	Pursuant to sub-clause 4.1 the following shall be provided; - Certified Copy of Certificate of incorporation to show that the applicant is a registered company and legally authorised to do business in Kenya - Proof of registration with the National Construction Authority in Class **"NCA 6 or 7 or 8"** as Road Works Contractor	Must meet requirement	Must meet requirement	Must meet requirement	N/A	
2. Historical Contract Non-Performance							
2.1	History of Non-Performing Contracts	Non performance of a contract did not occur within the last five (5) years prior to the deadline for application submission based on all information on fully settled disputes or litigation. A fully settled dispute or	Must meet requirement by itself or as party to past or existing JV	N / A	Must meet requirement by itself or as party to past or existing JV	N / A	Form CON-2

kkkkk

		litigation is one that has been resolved in accordance with the Dispute Resolution Mechanism under the respective contract, and where all appeal instances available to the applicant have been exhausted.					
2.2	Pending Litigation	All pending litigation shall in total not represent more than thirty percent (30%) of the Applicant's net worth and shall be treated as resolved against the Applicant.	Must meet requirement by itself or as party to past or existing JV	N / A	Must meet requirement by itself or as party to past or existing JV	N / A	Form CON-2
3. Financial Situation							
3.1	Financial Performance	Submission of audited accounts or if not required by the law of the applicant's country, other financial statements acceptable to the Employer, for the last **Three [3] years** to demonstrate: (a) the current soundness of the applicants' financial position and its prospective long-term profitability, and (b) capacity to have a cash flow amount of min. **Kshs. 500,000.00 (Five hundred thousand)** equivalent working capital	Must meet requirement (a) Must meet requirement (b) Must meet requirement	N / A (a) N / A (b) Must meet requiremen t	Must meet requirement (a) Must meet requirement (b) N / A	N / A (a)N / A (b) N / A	Form FIN - 3.1, with attachments
3.2	Average Annual Construction Turnover	Minimum average annual construction turnover **KShs 1,000,000.00 (One Million)** calculated as an annual average of the total payments received from construction works within the last Three (3)	Must meet requirement	Must meet requirement	Must meet ((100-50)/(n-1))% of the requirement where n= number of joint	N/A	Form FIN - 3.2

		years.			venture members		
4. Experience							
4.1	General Construction Experience	Experience under construction contracts in the role of contractor, subcontractor, or management contractor for at least the last **Five (5) years** prior to the applications submission deadline.	Must meet requirement	N / A	Must meet requirement	N / A	**4.** Form EXP - 4.1 **Experience**
4.2(a)	Specific Construction Experience	Participation as contractor, management contractor or subcontractor, in at least **Two (2) contract of a value of at least Kshs. 1,000,000.00 (One Million)** that has been successfully and substantially completed and that is similar to the proposed works. The similarity shall be based on the physical size, complexity, methods/technology or other characteristics as described. For subcontracted Works the Bidder should provide the following: ▪ Award letter of the Main Contractor ▪ Award letter of the subcontract ▪ Completion letter of the Subcontract ▪ Proof of payment (attach payment certificates and certified bank statements indicating proof of payment)	Must meet requirement	Must meet requirement	N / A	Must meet requirement	FormEXP.4.2(a) Must Provide Attachements

kkkkk

4.2(b)		b) For the above or other contracts executed during the period stipulated in 4.2(a) above, a minimum construction experience in at least one (1) of: - Rehabilitation of bitumen roads. - New Construction to bitumen standards - New construction of bridges and approach roads - Other similar road works (gravel, concrete paving blocks or concrete etc.)	Must meet requirements	Must meet requirement	N / A	Must meet requirement	Must Provide Attachements
4.3	Work Methodology	Submission of a work methodology.	Should demonstrate understanding of the scope of works and other general requirements	Should demonstrate understanding of the scope of works and other general requirement	N/A	N/A	Must Provide Attachements
5. Site Staff							
	The site staff shall possess minimum levels set below;						
	Site Agent	**The site staff shall possess minimum levels set below;** **Qualification - Dip in Civil Eng.** **General Experience -10yrs** **Specific Experience – 7yrs**	Must meet requirements	Must meet requirement	N/A	N/A	Must Provide Attachements
	Dep. Site Agent/ Site Engineer	**Qualification - Dip in Civil Eng.** **General Experience -10yrs** **Specific Experience – 7yrs**	Must meet requirements	Must meet requirement	N/A	N/A	
	Senior Foreman	**Qualification - Dip in Civil Eng.**	Must meet requirements	Must meet requirement	N/A	N/A	

		General Experience -6 yrs **Specific Experience – 4 yrs.**					
	Site Surveyor	**Qualification - Dip in Civil Eng.** **General Experience -6 yrs** **Specific Experience – 4 yrs**	Must meet requirements	Must meet requirement	N/A	N/A	
	Foremen	**Qualification – Certificate in Civil Eng.** **General Experience -3 yrs** **Specific Experience – 1 yr**	Must meet requirements	Must meet requirement	N/A	N/A	

kkkkk

B. *ERROR* CHECK

Bidders who are responsive after the detailed evaluation will be subjected to error check

C. MARGIN OF PREFERENCE

- If the **TDS** so specifies, the Procuring Entity will grant a margin of preference of fifteen percent (15%) to be loaded one valuated price of the foreign tenderers, where the percentage of shareholding of Kenyan citizens is less than fifty-one percent (51%).

- Contractors applying for such preference shall be asked to provide, as part of the data for qualification, such information, including details of ownership, as shall be required to determine whether, according to the classification established by the Procuring Entity, a particular contract or or group of contractors qualifies for a margin of preference.

- After Tenders have been received and reviewed by the Procuring Entity, responsive Tenders shall be assessed to ascertain their percentage of shareholding of Kenyan citizens. Responsive tenders to shall be classified into the following groups:
  i) Group A: tenders offered by Kenyan Contractors and other Tenderers where Kenyan citizens hold shares of over fifty one percent (51%).
  ii) Group B: tenders offered by foreign Contractors and other Tenderers where Kenyan citizens hold shares of less than fifty one percent (51%).

- All evaluated tenders in each group shall, as a first evaluation step, be compared to determine the lowest tender, and the lowest evaluated tender in each group shall be further compared with each other. If, as a result of this comparison, a tender from Group A is the lowest, it shall be selected for the award. If a tender from Group B is the lowest, an amount equal to the percentage indicated in Item 3.1 of the respective tender price, including unconditional discounts and excluding provisional sums and the cost of day works, if any, shall be added to the evaluated price offered in each tender from Group B. All tenders shall then be compared using new prices with added prices to Group B and the lowest evaluated tender from Group A. If the tender from Group A is still the lowest tender, it shall be selected for award. If not, the lowest evaluated tender from Group B based on the first evaluation price shall be selected.

D. SECTION III – POST QUALIFICATION

[The Procuring Entity will provide the preliminary evaluation criteria. To facilitate, a template may be attached or clearly described all information and list of documentation to be submitted by Tenderers to enable preliminary evaluation of the Tender]

3. Tender Evaluation (ITT 35)

Price evaluation: In addition to the criteria listed in ITT 35.2 (a) – (d) the following criteria shall apply:

i) **Alternative Completion Times,** if permitted under ITT 13.2, will be evaluated as follows: ……NA……

ii) **Alternative Technical Solutions** for specified parts of the Works, if permitted under ITT 13.4, will be evaluated as follows: ……NA……

iii) **Other Criteria; i**f permitted under ITT 35.2(d) :……NA…….....

4. Post qualification and Contract award (ITT 39), more specifically,

b) In case the tender <u>was subject to post-qualification</u>, the contract shall be awarded to the lowest evaluated tenderer, subject to confirmation of pre-qualification data, if so required.

c) Incase the tender <u>was not subject to post-qualification</u>, the tender that has been determined to be the lowest evaluated tenderer shall be considered for contract award, subject to meeting each of the following conditions.

  i) The Tenderer shall demonstrate that it has access to, or has available, liquid assets, unencumbered real assets, lines of credit, and other financial means (independent of any contractual advance payment) sufficient to meet the construction cash flow **as per the provisions of the Qualification Criteria Matrix.**

  ii) Minimum <u>average</u> annual turnover **as per the provisions of the Qualification Criteria Matrix.**

  iii) Specific experience requirement **as per the provisions of the Qualification Criteria Matrix.**

SECTION IV - TENDERING FORMS

QUALIFICATION FORMS

NOTE THAT BIDDER'S SHOULD NOT ALTER THE FORMAT OF ANY OF THE FORMS UNDER THIS SECTION. ANY ALTERATION SHALL LEAD TO DISQUALIFICATION OF THE BID

1. FOREIGN TENDERERS 40%RULE.
2. TENDERER'S ELIGIBILITY- CONFIDENTIAL BUSINESS QUESTIONNAIRE
3. Form EQU: EQUIPMENT.
4. FORM PER -1.
5. FORM PER-2.
6. TENDERERS QUALIFICATION WITHOUT PRE-QUALIFICATION.
   - 6.1 FORM ELI-1.1.
   - 6.2 FORM ELI-1.2.
   - 6.3 FORM CON –2.
   - 6.4 FORM FIN –3.1.
   - 6.5 FORM FIN –3.2.
   - 6.6 FORM FIN –3.3.
   - 6.7 FORM FIN –3.4.
   - 6.8 FORM EXP -4.1.
   - 6.9 FORM EXP - 4.2(a).
   - 6.9 FORM EXP - 4.2 (a) (cont.).
   - 6.10 FORM EXP -4.2 (b).

OTHER FORMS

7. FORM OF TENDER.
8. FORM OF TENDER SECURITY - DEMAND BANK GUARANTEE.
9. FORM OF TENDER SECURITY (TENDER BOND).
10. FORM OF TENDER-SECURING DECLARATION.
11. APPENDIX TO TENDER.

TECHNICAL PROPOSAL FORMS

Site Organization.

Method Statement.

Mobilization Schedule.

Construction Schedule.

QUALIFICATION FORMS

1. FOREIGN TENDERERS 40% RULE

Pursuant to ITT 3.9, a foreign tenderer must complete this form to demonstrate that the tender fulfils this condition.

ITEM	Description of Work Item	Describe location of Source	COST in K. shillings	Comments, if any
A	**Local Labor**			
1				
2	NA			
3				
4				
B				
1				
2	NA			
3				
4				
C	**Local materials**			
1				
2				
3	NA			
4				
D				
1				
2				
3				
4				
E				
1				
2				
3				
4				
	TOTAL COST LOCAL CONTENT		XXXXX	
	PERCENTAGE OF CONTRACT PRICE		xxxx	

3. FORM EQU: EQUIPMENT

The Tenderer shall provide adequate information to demonstrate clearly that it has the capability to meet the requirements for the key equipment listed in Section III, Evaluation and Qualification Criteria. A separate Form shall be prepared for each item of equipment listed, or for alternative equipment proposed by the Tenderer.

<table>
<tr><td colspan="5">Item of equipment</td></tr>
<tr><td rowspan="2">equipment information</td><td colspan="2">Name of manufacturer</td><td colspan="2">Model and power rating</td></tr>
<tr><td>Capacity</td><td></td><td colspan="2">Year of manufacturer</td></tr>
<tr><td rowspan="2">Current status</td><td colspan="4">Current location</td></tr>
<tr><td colspan="4">Details of current commitments</td></tr>
<tr><td>Source</td><td colspan="4">Indicate source of equipment</td></tr>
<tr><td></td><td>☐Owned</td><td>☐Rented</td><td>☐Leased</td><td>☐Specialyy manufactured</td></tr>
<tr><td>Owner</td><td colspan="4">Name of owner</td></tr>
<tr><td></td><td colspan="4">Address of owner</td></tr>
<tr><td></td><td colspan="2">Telephone</td><td colspan="2">Contact name</td></tr>
<tr><td></td><td colspan="2">Fax</td><td colspan="2">Telex</td></tr>
<tr><td>Agreement</td><td colspan="4">Details of rental /lease /manufacture agreement specific to the project</td></tr>
</table>

4. FORM PER-1

Contractor's Representative and Key Personnel Schedule

Tenderers should provide the names and details of the suitably qualified Contractor's Representative and Key Personnel to perform the Contract. The data on their experience should be supplied using the Form PER-2 below for each candidate.

Contractor' Representative and Key Personnel.

1.	**Title of position:** Contractor's Representative :	
	Name of candidate:	
	Duration of appointment:	
	Time commitment: for this position:	
	Expected time schedule for this position:	
2.	**Title of position:**	
	Name of candidate:	
	Duration of appointment:	
	Time commitment: for this position:	
	Expected time schedule for this position:	
3.	**Title of position:**	
	Name of candidate:	
	Duration of appointment:	
	Time commitment: for this position:	
	Expected time schedule for this position:	
4.	**Titleofposition:**	
	Name of candidate:	

	Duration of appointment:	
	Time commitment: for this position:	
	Expected time schedule for this position:	
5.	**Title of position:** *[insert title]*	
	Name of candidate	
	Duration of appointment:	
	Time commitment: for this position:	
	Expected time schedule for this position:	

5. FORM PER-2:

Resume and Declaration - Contractor's Representative and Key Personnel.

<table>
<tr><td colspan="3">Name of Tenderer</td></tr>
<tr><td colspan="3">Position [#1]: [title of position from Form PER-1]</td></tr>
<tr><td>Personnel information</td><td>Name:</td><td>Date of birth:</td></tr>
<tr><td></td><td>Address:</td><td>E-mail:</td></tr>
<tr><td rowspan="4"></td><td colspan="2"></td></tr>
<tr><td colspan="2">Professional qualification:</td></tr>
<tr><td colspan="2">Academic qualification</td></tr>
<tr><td colspan="2">Language proficiency:</td></tr>
<tr><td colspan="3">Details</td></tr>
<tr><td rowspan="4"></td><td colspan="2">Address of Procuring Entity:</td></tr>
<tr><td>Telephone:</td><td>Contact (manager / personnel officer):</td></tr>
<tr><td colspan="2">Fax:</td></tr>
<tr><td>Jobtitle:</td><td>Years with present procuring Entity:</td></tr>
</table>

Summarize professional experience in reverse chronological order. Indicate particular technical and managerial experience relevant to the project.

Project	**Role**	**Duration of involvement**	**Relevant experience**

DECLARATION

I, the under signed……. *[insert either "Contractor's Representative" or "Key Personnel" as applicable]*, certify that to the Lowest of my knowledge and belief, the information contained in this Form PER-2 correctly describes myself, my qualifications and my experience.

I confirm that I am available as certified in the following table and throughout the expected time schedule for this position as provided in the Tender:

Commitment	Details
Commitment to duration of contract:	
Time commitment:	

I understand that any misrepresentation or omission in this Form may:

a) be taken into consideration during Tenderevaluation;
b) result in my disqualification from participating in the Tender;
c) result in my dismissal from the contract.

Name of Contractor's Representative or Key Personnel: [*insert name*]

Signature:_____

Date: (day month year): _____

Countersignature of authorized representative of the Tenderer:

Signature:_____

Date: (day month year): _____

6. TENDERERS QUALIFICATION WITHOUT PRE-QUALIFICATION

To establish its qualifications to perform the contract in accordance with Section III, Evaluation and Qualification Criteria the Tenderer shall provide the information requested in the corresponding Information Sheets included hereunder.

6.1 FORM ELI-1.1 Tenderer Information Form

Date:

ITT No. and title:.....

Tenders Name:
Incase of joint venture(jv) , name of each member:
tenderers actual or intended country of registration:
Tenderers actual or intended year of incoporatio
Tenderer legal address
Tenderer's authorized representative information Name: _____ Address: _____ Telephone/Fax numbers: _____ E-mail address: _____
Attached are copies of original documents of ☐ Articles of Incorporation (or equivalent documents of constitution or association), and/or documents of registration of the legal entity named above, in accordance with ITT 3.6 ☐ In case of JV, letter of intent to form JV or JV agreement, in accordance with ITT 3.5 ☐ In case of state-owned enterprise or institution, in accordance with ITT 3.8, documents establishing: 1. 2. Included are the organizational chart, a list of Board of Directors, and the beneficial ownership.

6.2 FORM ELI-1.2

Tenderer's JV Information Form

(to be completed for each member of Tenderer's JV)

Date:_____

ITT No. and title:_____

Tenderer's JV name:
JV member's name:
JV member's country of registration:
JV member's year of constitution:
JV member's legal address in country of constitution:
JV member's authorized representative information Name: _____ Address: _____ Telephone/Fax numbers:_____ E-mail address: _____
1. Attached are copies of original documents of ☐Articles of Incorporation (or equivalent documents of constitution or association), and/or registration documents of the legal entity named above, in accordance with ITT 43.6. ☐ In case of a state-owned enterprise or institution, documents establishing legal and financial autonomy, operation in accordance with commercial law, and that they are not under the supervision of the Procuring Entity, in accordance with ITT 3.8. 2. Included are the organizational chart, a list of Board of Directors, and the beneficial ownership.

6.3 FORM CON – 2

Historical Contract Non-Performance, Pending Litigation and Litigation History

Tenderer'sName:_____

Date:_____

JV Member's Name_____

ITT No. and title:_____

Non-Performed Contracts in accordance with Section III, Evaluation and Qualification Criteria			
☐ Contract non-performance did not occur since 1st January *[insert year]* specified in Section III, Evaluation and Qualification Criteria, Sub-Factor 2.1. ☐ Contract(s) not performed since 1st January *[insert year]* specified in Section III, Evaluation and Qualification Criteria, requirement 2.1			
Year	**Non- performed portion of contract** Amount & %	**Contract Identification**	**Total Contract Amount (current value, currency, exchange rate and Kenya Shilling equivalent)**
		Contract identification: Name of Procuring Entity: Reason(s) for non perfomance :	
Pending Litigation, in accordance with Section III, Evaluation and Qualification Criteria			
☐ No pending litigation in accordance with Section III, Evaluation and Qualification Criteria, Sub-Factor 2.3. ☐ Pending litigation in accordance with Section III, Evaluation and Qualification Criteria, Sub-Factor 2.3 as indicated below.			

Year of dispute	**Amount in dispute (ksh)**	**Contract Identification**	**Total Contract Amount (currency), Kenya Shilling Equivalent (exchange rate)**
		Contract Identification: Name of Procuring Entity: Address of Procuring Entity: Matter in dispute: Party who initiated the dispute:	

		Status of dispute:	
		Contract Identification: Name of Procuring Entity: Address of Procuring Entity: Matter in dispute: Party who initiated the dispute: Status of dispute:	

I Litigation History in accordance with Section III, Evaluation and Qualification Criteria

D No Litigation History in accordance with Section Ill, Evaluation and Qualification Criteria, Sub- Factor 2.4. D Litigation History in accordance with Section III, Evaluation and Qualification Criteria, Sub- Factor 2.4 as indicated below.			
	[insert percentage]	Contract Identification: [indicate complete contract name, number, and any other identification] Name of Procuring Entity: Address of Procuring Entity: Matter in dispute: Party who initiated the dispute Reason(s) for Litigation and award decision *[indicate main reason(s)}*	*[insert amount}*

FORM CON 3: DECLARATION OF KNOWLEDGE OF SITE

This is to certify that
Name/s.....
Being the authorized representative/Agent of [Name of
bidder.....

Has familiarized himself/herself with the Site conditions in accordance with the Instructions to tenderers and the Tender Notice for purposes of tendering for this road project.
……
……

Name..... .....

Designation.....

Signed…….....

Date.....
(Authorised Representative of Kenya Rural Roads Authority) (Designation)

Having studied the tender Documents, and gained knowledge of local conditions on site likely to influence the works and cost thereof, I certify that I am satisfied with the decription of the works and understand the scope of works as specified and as implied in this tender.

Name..... .....

Designation.....

Signed…….....

Date.....
(Signed and Stamped byAuthorised BiddersAgent/ Representative) (Designation)

6.4 FORM FIN –3.1:
Financial Situation and Performance

Tenderer's Name:_____
Date:_____
JV Member's Name_____
ITT No. and title:_____

6.4.1Financial Data

Type of Financial information in_____ (currency)	**Historic information for previous _____ *years*, _____ (amount in currency, currency, exchange rate*, USD equivalent)**				
	Year 1	Year 2	Year 3	Year 4	Year 5
Statement of Financial Position (Information from Balance Sheet)					
Total Assets (TA)					
Total Liabilities (TL)					
Total Equity/Net Worth (NW)					
Current Assets (CA)					
Current Liabilities (CL)					
Working Capital (WC)					
Information from Income Statement					
Total Revenue (TR)					
Profits Before Taxes (PBT)					
Cash Flow Information					
Cash Flow from Operating Activities					

**Refer to ITT 15 for the exchange rate*

6.4.2 Sources of Finance

Specify sources of finance to meet the cash flow requirements on works currently in progress and for future contract commitments.

No.	Source of finance	Amount (Kenya Shilling equivalent)
1		
2		
3		

6.4.3 Financial documents

The Tenderer and its parties shall provide copies of financial statements for_____years pursuant Section III, Evaluation and Qualifications Criteria, Sub-factor 3.1. The financial statements shall:

a) reflect the financial situation of the Tenderer or incase of JV member, and not an affiliated entity (such as parent company or group member).
b) be independently audited or certified in accordance with local legislation.
c) be complete, including all notes to the financial statements.
d) correspond to accounting periods already completed and audited.

Attached are copies of financial statements [1] for the_____years required above; and complying with the requirements

6.5 FORM FIN – 3.2:

Average Annual Construction Turnover

Tenderer's Name:_____
Date:_____
JV Member's Name_____
ITT No. and title:…….

		Annual turnover data (construction only)	
Year	**Amount Currency**	**Exchange Rate**	**Kenya Shilling equivalent**
[indicate year]	*[insert amount and indicate currency]*		
Average Annual Construction Turnover*			

**See Section III, Evaluation and Qualification Criteria, Sub-Factor 3.2*

[1] *If the most recent set of financial statements is for a period earlier than 12 months from the date of Tender, the reason for this should be justified.*

6.6 FORM FIN –3.3:
Financial Resources

Specify proposed sources of financing, such as liquid assets, unencumbered real assets, lines of credit, and other financial means, net of current commitments, available to meet the total construction cashflow demands of the subject contractor contracts as specified in Section III, Evaluation and Qualification Criteria.

Financial Resources		
No.	**Source of financing**	**Amount (Kenya Shilling equivalent)**
1		
2		
3		

6.7 FORM FIN–3.4:
Current Contract Commitments / Works in Progress

Tenderers and each member to a JV should provide information on their current commitments on all contracts that have been awarded, or for which a letter of intent or acceptance has been received, or for contracts approaching completion, but for which an unqualified, full completion certificate has yet to be issued.

Current Contract Commitments					
No.	**Name of Contract**	**Procuring Entity's** **Contact Address, Tel,**	**Valueof** **Outstanding Work** **[Current Kenya Shilling /month** **Equivalent]**	**Estimated** **Completion Date**	**Average Monthly Invoicing Over Last Six Months** **[Kenya Shilling /month)]**
1					
2					
3					
4					
5					

6.8 FORM EXP -4.1
General Construction Experience

Tenderer's Name:_____
Date:_____
JV Member's Name:_____
ITT No. and title:……

Starting Year	Ending Year	Contract Identification	Roleof Tenderer
		Contract name: _____ Brief Description of the Works performed by the Tenderer: _____ Amount of contract: _____ Name of Procuring Entity: _____ Address: _____	
		Contract name: _____ Brief Description of the Works performed by the Tenderer: _____ Amount ofcontract: _____ Nameof ProcuringEntity: _____ Address: _____	
		Contract name: _____ Brief Description of the Works performed by the Tenderer: _____ Amountofcontract: _____ Nameof ProcuringEntity: _____ Address: _____	

6.9 FORM EXP -4.2(a)

Specific Construction and Contract Management Experience

Tenderer's Name:_____
Date:_____
JV Member's Name_____
ITT No. and title:_____

Similar Contract No.	**Information**			
Contract Identification				
Award date				
Completion date				
Role in Contract Total Contract Amount	Prime Contractor ☐	Member in JV ☐	Management Contractor ☐	Sub-contractor ☐
If member in a JV or sub-contractor, specify participation in total Contract amount			**KenyaShilling**	
Procuring Entity's Name:				
Address: Telephone/fax number				
E-mail:				
Description of the similarity in accordance with Sub-Factor 4.2(a) of Section III: 1.				
Amount				
2.Physical size of required works items				
3.Complexity				
4.Methods/Technology				
5.Construction rate for key activities				
6.Other Characteristics				

6.10 FORM EXP -4.2(b)
Construction Experience in Key Activities

Tenderer's Name:_____
Date:_____
Tenderer's JV Member Name:_____
Sub-contractor's Name[2] (as perITT34):_____

ITT No. and title:_____

All Sub-contractors for key activities must complete the information in this form as per ITT 34 and Section III, Evaluation and Qualification Criteria, Sub-Factor 4.2.

1. Key Activity No One: _

	Information			
Contract Identification				
Award date				
Completion date				
Role in Contract	Prime Contractor ☐	Member in JV ☐	Management Contractor ☐	Sub-contractor ☐
Total Contract Amount			**Kenya Shilling**	
Quantity (Volume, number or rate of production, as applicable) performed under the contract per year or part of the year	Total quantity in the contract (i)	Percentage participation (ii)		Actual Quantity Performed (i) x (ii)
Year1				
Year 2				
Year 4 Year 3				
Procuring Entity's Name:				

[2] *If applicable*

Address: Telephone/fax number E-mail:	**Information**

Description of the key activities in accordance with Sub-Factor 4.2(b) of Section III:	

2 Activity No. Two
3……

OTHER FORMS

7. FORM OF TENDER

INSTRUCTIONS TO TENDERERS

i) The Tenderer must prepare this Form of Tender on stationery with its letterhead clearly showing the Tenderer's complete name and business address.

ii) All italicized text is to help Tenderer in preparing this form.

iii) Tenderer must complete and sign CERTIFICATE OF INDEPENDENT TENDER DETERMINATION and the SELF DECLARATION OF THE TENDERER attached to this Form of Tender.

iv) The Form of Tender shall include the following Forms duly completed and signed by the Tenderer.

- *Tenderer's Eligibility-Confidential Business Questionnaire.*
- *Certificate of Independent Tender Determination.*
- *Self-Declaration of the Tenderer.*

Date of this Tender submission: ……

Request for Tender No.:……

Name and description of Tender:

……

……

Alternative No.: NA

To: Regional Director,
Kenya Rural Roads Authority,
P.O. Box 1391-70100 Garissa.

Dear Sirs,

1. In accordance with the Conditions of Contract, Specifications, Drawings and Bills of Quantities for the execution of the above-named Works, we, the undersigned offer to construct and complete the Works and remedy any defects therein for the sum of Kenya Shillings [*[Amount in figures]* _____Kenya Shillings *[amount in words]*_____

   The above amount includes foreign currency amount (s) of [*state figure or a percentage and currency*] [figures] _____[words]_____

   _____

   The percentage or amount quoted above does not include provisional sums, and only allows not more than two foreign currencies.

2. We undertake, if our tender is accepted, to commence theWorks as soon as is reasonably possible after the receipt of the Engineer's notice to commence, and to complete the whole of the Works comprised in the Contract within the time stated in the Particular Conditions of Contract.

3. We agree to adhere by this tender until_____*[Insert date]*, and it shall remain binding upon us and may be accepted at any time before that date.

4. Unless and until a formal Agreement is prepared and executed this tender together with your written acceptance thereof, shall constitute abinding Contract between us. We further understand that you are not bound to accept the lowest or any tender you may receive.

5. We, the undersigned, further declare that:

   i) *No reservations:* We have examined and have no reservations to the tender document, including Addenda issued in accordance with ITT 8;

   ii) *Eligibility:* We meet the eligibility requirements and have no conflict of interest in accordance with ITT 3

and 4;

iii) *Tender-Securing Declaration:* We have not been suspended nor declared ineligible by the Procuring Entity based on execution of a Tender-Securing or Proposal-Securing Declaration in the Procuring Entity's Country in accordance with ITT 19.8;

(iv) Conformity: We offer to execute in conformity with the tendering documents and in accordance with the implementation and completion specified in the construction schedule, the following Works: *[insert a brief description of the Works];*

(v) Tender Price: The total price of our Tender, excluding any discounts offered in item 1 above is: *[Insert one of the options below as appropriate]*

(vi) **Option1,** incase of one lot: Total price is: [*insert the total price of the Tender in words and figures, indicating the various amounts and the respective currencies*]; Or

Option2, in case of multiple lots:

a) *Total price of each lot* [*insert the total price of each lot in words and figures, indicating the various amounts and the respective currencies*]; and

b) *Total price of all lots* (sum of all lots) [*insert the total price of all lots in words and figures, indicating the various amounts and the respective currencies*];

vii) Discounts: The discounts offered and the methodology for their application are:

viii) The discounts offered are: [*Specify in detail each discount offered.*]

ix) The exact method of calculations to determine the net price after application of discounts is shown below: [*Specify in detail the method that shall be used to apply the discounts*];

x) *Tender Validity Period:* Our Tender shall be valid for the period specified in TDS 18.1 (as amended, if applicable) from the date fixed for the Tender submission deadline specified in TDS 22.1(as amended, if applicable), and it shall remain binding upon us and may be accepted at any time before the expiration of that period;

xi) *Performance Security:* If our Tender is accepted, we commit to obtain a Performance Security in accordance with the Tendering document;

xii) *One Tender Per Tender:* We are not submitting any other Tender(s) as an individual Tender, and we are not participating in any other Tender(s) as a Joint Venture member or as a subcontractor, and meet the requirements of ITT3.4, other than alternative Tenders submitted in accordance with ITT 13.3;

xiii) *Suspension and Debarment:* We, along with any of our subcontractors, suppliers, Engineer, manufacturers, or service providers for any part of the contract, are not subject to, and not controlled by any entity or individual that is subject to, a temporary suspension or a debarment imposed by the Public Procurement Regulatory Authority or any other entity of the Government of Kenya, or any international organization.

xiv) *State-owned enterprise or institution:* [*select the appropriate option and delete the other*] [*We are not a state-owned enterprise or institution*]/[*We are a state-owned enterprise or institution but meet the requirements of ITT 3.7*];

xv) *Commissions, gratuities, fees:* We have paid, or will pay the following commissions, gratuities, or fees with respect to the tender process or execution of the Contract: *[insert complete name of each Recipient, its full address, the reason for which each commission or gratuity was paid and the amount and currency of each such commission or gratuity]*

Name of Recipient	Address	Reason	Amount

xvi) *Binding Contract:* We understand that this Tender, together with your written acceptance thereof included in your Letter of Acceptance, shall constitute a binding contract between us, until a formal contract is prepared and executed;

xvii) *Not Bound to Accept:* We understand that you are not bound to accept the lowest evaluated cost Tender, the Most Advantageous Tender or any other. Tender that you may receive;

xviii) *Fraud and Corruption:* We hereby certify that we have taken steps to ensure that no person acting for us or on our behalf engages in any type of Fraud and Corruption;

xix) *Collusive practices:* We hereby certify and confirm that the tender is genuine, non-collusive and made with the intention of accepting the contract if awarded. To this effect we have signed the "Certificate of Independent Tender Determination" attached below.

xx) We undertake to adhere by the Code of Ethics for Persons Participating in Public Procurement and Asset Disposal, copy available from_____(*specify website*) during the procurement process and the execution of any resulting contract.

xxi) We, the Tenderer, have completed fully and signed the following Forms as part of our Tender:

a) Tenderer's Eligibility; Confidential Business Questionnaire – to establish we are not in any conflict to interest.

b) Certificate of Independent Tender Determination – to declare that we completed the tender without colluding with other tenderers.

c) Self-Declaration of the Tenderer– to declare that we will, if awarded a contract, not engage in any form of fraud and corruption.

d) Declaration and commitment to the Code of Ethics for Persons Participating in Public Procurement and Asset Disposal.

Further, we confirm that we have read and understood the full content and scope of fraud and corruption as informed in **"Appendix 1- Fraud and Corruption**" attached to the Form of Tender.

Name of the Tenderer: *[*insert complete name of person signing the*

Tender]

Name of the person duly authorized to sign the Tender on behalf of the Tenderer: **[*insert complete name of person duly authorized to sign the Tender*]

Title of the person signing the Tender: [*insert complete title of the person signing the Tender*] Signature **of**

the person named above: [*insert signature of person whose name and capacity are shown above*] **Date**

signed [*insert date of signing*] day of [*insert month*], [*insert year*]

Date signed_____day of_____,_____

Notes

** In the case of the Tender submitted by joint venture specify the name of the Joint Venture as Tenderer*

*** Person signing the Tender shall have the power of attorney given by the Tenderer to be attached with the Tender,*

A. TENDERER'S ELIGIBILITY-CONFIDENTIAL BUSINESS QUESTIONNAIRE

Instruction to Tenderer

Tender is instructed to complete the particulars required in this Form, *one form for each entity if Tender is a JV.*
Tenderer is further reminded that it is an offence to give false information on this Form.

i) Tenderer's details

	ITEM	DESCRIPTION
1	Name of the Procuring Entity	
2	Reference Number of the Tender	
3	Date and Time of Tender Opening	
4	Name of the Tenderer	
5	Full Address and Contact Details of the Tenderer.	1.Country 2. City 3.Location 4. Building 5.Floor 6. Postal Address 7. Name and email of contact person.
6	Current Trade License Registration Number and Expiring date	
7	Name, country and full address (*postal and physical addresses, email, and telephone number*) of Registering Body/Agency	
8	Description of Nature of Business	
9	Maximum value of business which the Tenderer handles.	
10	State if Tenders Company is listed in stock exchange, give name and full address (*postal and physical addresses, email, and telephone number*) of state which stock exchange	

General and Specific Details

i) Sole Proprietor, provide the following details.

Name in full_____Age_____
Nationality_____Country of Origin_____
Citizenship _____

ii) Partnership, provide the following details.

	Names of Partners	Nationality	Citizenship	% Shares owned
1				
2				
3				

(iv) Registered Company, provide the following details.

i) Private or public Company _____

ii) State the nominal and issued capital of the Company

Nominal Kenya Shillings (Equivalent).....

Issued Kenya Shillings (Equivalent).....

iii) Give details of Directors as follows.

	Names of Director	Nationality	Citizenship	% Shares owned
1				
2				
3				

(v) DISCLOSURE OF INTEREST- Interest of the Firm in the Procuring Entity.

i) Are there any person/persons in…… (*Name of Procuring Entity)* who has/have an interest or relationship in this firm? Yes/No……

If yes, provide details as follows.

	Names of Person	Designation in the Procuring Entity	Interest or Relationship with Tenderer
1			
2			
3			

	Type of Conflict	Disclosure YES or NO	If YES provide details of the relationship with Tenderer
1	Tenderer is directly or indirectly controls, is controlled by or is under common control with another tenderer.		
2	Tenderer receives or has received any direct or indirect subsidy from another tenderer.		
3	Tenderer has the same legal representative as another tenderer		
4	Tender has a relationship with another tenderer, directly or through common third parties, that puts it in a position to influence the tender of another tenderer, or influence the decisions of the Procuring Entity regarding this tendering process.		
5	Any of the Tenderer's affiliates participated as a consultant in the preparation of the design or technical specifications of the works that are the subject of the tender.		
6	Tenderer would be providing goods, works, non-consulting services or consulting services during implementation of the contract specifiedin this Tender Document.		
7	Tenderer has a close business or family relationship with a professional staff of the Procuring Entity who are directly or indirectly involved in the preparation of the Tender document or specifications of the Contract, and/or the Tender evaluation process of such contract.		
8	Tenderer has a close business or family relationship with a professional staff of the Procuring Entity who would be involved in the implementation or supervision of the such Contract.		
9	Has the conflict stemming from such relationship stated in item 7 and 8 above been resolved in a manner acceptable to the Procuring Entity throughout the tendering process and execution of the Contract.		

(vi) Certification

On behalf of the Tenderer, I certify that the information given above is complete, current and accurate as at the date of submission.

Full Name_____ Title or Designation_____

_____ _____

(Signature) *(Date)*

B. CERTIFICATE OF INDEPENDENT TENDER DETERMINATION

I, the undersigned, in submitting the accompanying Letter of Tender to the **Kenya Rural Roads Authority** for:……**in** response to the request for tenders made by:_____[Name of Tenderer] do hereby make the following statements that I certify to be true and complete in every respect:

I certify, on behalf of_____[Name of Tenderer] that:

1. I have read and I understand the contents of this Certificate;

2. I understand that the Tender will be disqualified if this Certificate is found not to be true and complete in every respect;

3. I am the authorized representative of the Tenderer with authority to sign this Certificate, and to submit the Tender on behalf of the Tenderer;

4. For the purposes of this Certificate and the Tender, I understand that the word "competitor" shall include any individual or organization, other than the Tenderer, whether or not affiliated with the Tenderer, who:
   a) has been requested to submit a Tender in response to this request for tenders;
   b) could potentially submit a tender in response to this request for tenders, based on their qualifications, abilities or experience;

5. The Tenderer discloses that [check one of the following, as applicable]:
   a) The Tenderer has arrived at the Tender independently from, and without consultation, communication, agreement or arrangement with, any competitor;
   b) the Tenderer has entered into consultations, communications, agreements or arrangements with one or more competitors regarding this request for tenders, and the Tenderer discloses, in the attached document(s), complete details thereof, including the names of the competitors and the nature of, and reasons for, such consultations, communications, agreements or arrangements;

6. In particular, without limiting the generality of paragraphs (5) (a) or (5) (b) above, there has been no consultation, communication, agreement or arrangement with any competitor regarding:
   a) prices;
   b) methods, factors or formulas used to calculate prices;
   c) the intention or decision to submit, or not to submit, a tender; or
   d) the submission of a tender which does not meet the specifications of the request for Tenders; except as specifically disclosed pursuant to paragraph (5) (b) above;

7. In addition, there has been no consultation, communication, agreement or arrangement with any competitor regarding the quality, quantity, specifications or delivery particulars of the works or services to which this request for tenders relates, except as specifically authorized by the procuring authority or as specifically disclosed pursuant to paragraph (5) (b) above;

8. The terms of the Tender have not been, and will not be, knowingly disclosed by the Tenderer, directly or indirectly, to any competitor, prior to the date and time of the official tender opening, or of the awarding of the Contract, whichever comes first, unless otherwise required by law or as specifically disclosed pursuant to paragraph (5) (b) above.

Name_____

Title_____

Date_____

[Name, title and signature of authorized agent of Tenderer and Date]

SELF-DECLARATION FORMS

FORM SD1

SELF DECLARATION THAT THE PERSON/TENDERER IS NOT DEBARRED IN THE MATTER OF THE PUBLIC PROCUREMENT AND ASSET DISPOSAL ACT 2015.

I, ……., of Post Office Box ……..……. being a resident of …….. in the Republic of ……. do hereby make a statement as follows: -

1. THAT I am the Company Secretary/Chief Executive/Managing Director/Principal Officer/Director of ……...…… ***[Insert Name Of The Company]*** who is a Bidder in respect of ……..***[Insert Tender Name And Number]*** for **Kenya Rural Roads Authority***)* and duly authorized and competent to make this statement.

2. THAT the aforesaid Bidder, its Directors and subcontractors have not been debarred from participating in procurement proceeding under Part IV of the Act.

3. THAT what is deponed to herein above is true to the best of my knowledge, information and belief.

……	……	……
(Title) Bidder Official Stamp	(Signature)	(Date)

FORM SD2

SELF DECLARATION THAT THE TENDERER WILL NOT ENGAGE IN ANY CORRUPT OR FRAUDULENT PRACTICE

I, ……. of P. O. Box ……. being a resident of……. in the Republic of……..……. .do hereby make a statement as follows: -

1. THAT I am the Chief Executive/Managing Director/PrincipalOfficer/Director of ……...…… *(insert name of the Company)* who is a Bidder in respect of……. ***[Insert Tender Name And Number]*** ***for*** **Kenya Rural Roads Authority***)* and duly authorized and competent to make this statement.

2. THAT the aforesaid Bidder, its servants and/or agents /subcontractors will not engage in any corrupt or fraudulent practice and has not been requested to pay any inducement to any member of the Board, Management, Staff and/or employees and/or agents of……. *(insert name of the Procuring entity)* which is the procuring entity.

3. THAT the aforesaid Bidder, its servants and/or agents /subcontractors have not offered any inducement toany member of the Board, Management, Staff and/or employees and/or agents of……... *(name of the procuring entity)*

4. THAT the aforesaid Bidder will not engage/has not engaged in any corrosive practice with other bidders participating in the subject tender

5. THAT what is deponed to herein above is true to the best of my knowledge, information and belief.

…… …… ……
(Title) (Signature) (Date)

Bidder's Official Stamp

DECLARATION AND COMMITMENT TO THE CODE OF ETHICS

I …….....……. (person) on behalf of *(Name of the Business/Company/Firm*) …….....declare that I have read and fully understood the contents of the Public Procurement & Asset Disposal Act, 2015, Regulations and the Code of Ethics for persons participating in Public Procurement and Asset Disposal and my responsibilities under the Code.

I do hereby commit to abide by the provisions of the Code of Ethics for persons participating in Public Procurement and Asset Disposal.

Name of Authorized signatory.....

Sign.....

Position.....

Office address..... Telephone.....
E-mail.....
Name of the Firm/Company.....
Date.....

(Company Seal/Rubber Stamp where applicable) Witness

Name.....

Sign.....

Date.....

D. APPENDIX 1-FRAUD AND CORRUPTION

(Appendix 1 shall not be modified)

1. Purpose

1.1 The Government of Kenya's Anti-Corruption and Economic Crime laws and their sanction's policies and procedures, Public Procurement and Asset Disposal Act *(no. 33 of 2015)* and its Regulation, and any other Kenya's Acts or Regulations related to Fraud and Corruption, and similar offences, shall apply with respect to Public Procurement Processes and Contracts that are governed by the laws of Kenya.

2. Requirements

2.1 The Government of Kenya requires that all parties including Procuring Entities, Tenderers, (applicants/proposers), Consultants, Contractors and Suppliers; any Sub-contractors, Sub-consultants, Service providers or Suppliers; any Agents (whether declared or not); and any of their Personnel, involved and engaged in procurement under Kenya's Laws and Regulation, observe the highest standard of ethics during the procurement process, selection and contract execution of all contracts, and refrain from Fraud and Corruption and fully comply with Kenya's laws and Regulations as per paragraphs 1.1 above.

2.2 Kenya's public procurement and asset disposal act *(no. 33 of 2015)* under Section 66 describes rules to be followed and actions to be taken in dealing with Corrupt, Coercive, Obstructive, Collusive or Fraudulent practices, and Conflicts of Interest in procurement including consequences for offences committed. A few of the provisions noted below highlight Kenya's policy of no tolerance for such practices and behavior:

1) a person to whom this Act applies shall not be involved in any corrupt, coercive, obstructive, collusive or fraudulent practice; or conflicts of interest in any procurement or asset disposal proceeding;

2) A person referred to under subsection (1) who contravenes the provisions of that sub-section commits an offence;

3) Without limiting the generality of the subsection (1) and (2), the person shall be—
   a) disqualified from entering into a contract for a procurement or asset disposal proceeding; or
   b) if a contract has already been entered into with the person, the contract shall be voidable;

4) The voiding of a contract by the procuring entity under subsection (7) does not limit any legal remedy the procuring entity may have;

5) An employee or agent of the procuring entity or a member of the Board or committee of the procuring entity who has a conflict of interest with respect to a procurement—
   a) shall not take part in the procurement proceedings;
   b) shall not, after a procurement contract has been entered into, take part in any decision relating to the procurement or contract; and
   c) shall not be a subcontractor for the bidder to whom was awarded contract, or a member of the group of bidders to whom the contract was awarded, but the subcontractor appointed shall meet all the requirements of this Act.

6) An employee, agent or member described in subsection (1) who refrains from doing anything prohibited under that subsection, but for that subsection, would have been within his or her duties shall disclose the conflict of interest to the procuring entity;

7) If a person contravenes subsection (1) with respect to a conflict of interest described in subsection (5) (a) and the contract is awarded to the person or his relative or to another person in whom one of them had a director indirect pecuniary interest, the contract shall be terminated and all costs incurred by the public entity shall be made good by the awarding officer. Etc.

2.3 In compliance with Kenya's laws, regulations and policies mentioned above, the Procuring Entity:

a) Defines broadly, for the purposes of the above provisions, the terms set forth below as follows:

i) “corrupt practice” is the offering, giving, receiving, or soliciting, directly or indirectly, of anything of value to influence improperly the actions of another party;

ii) “fraudulent practice” is any act or omission, including misrepresentation, that knowingly or recklessly misleads, or attempts to mislead, a party to obtain financial or other benefit or to avoid an obligation;

iii) “collusive practice” is an arrangement between two or more parties designed to achieve an improper purpose, including to influence improperly the actions of another party;

iv) “coercive practice” is impairing or harming, or threatening to impair or harm, directly or indirectly, any party or the property of the party to influence improperly the actions of a party;

v) “obstructive practice” is:

- deliberately destroying, falsifying, altering, or concealing of evidence material to theinvestigation or making false statements to investigators in order to materially impede investigation by Public Procurement Regulatory Authority (PPRA) or any other appropriate authority appointed by Government of Kenya into allegations of a corrupt, fraudulent, coercive, or collusive practice; and/or threatening, harassing, or intimidating any party to prevent it from disclosing its knowledge of matters relevant to the investigation or from pursuing the investigation; or

- acts intended to materially impede the exercise of the PPRA's or the appointed authority's inspection and audit rights provided for under paragraph 2.3 e. below.

b) Defines more specifically, in accordance with the above procurement Act provisions set forth for fraudulent and collusive practices as follows:

"fraudulent practice" includes a misrepresentation of fact in order to influence a procurement or disposal process or the exercise of a contract to the detriment of the procuring entity or the tenderer or the contractor, and includes collusive practices amongst tenderers prior to or after tender submission designed to establish tender prices at artificial non-competitive levels and to deprive the procuring entity of the benefits of free and open competition.

c) Rejects a proposal for award[1] of a contract if PPRA determines that the firm or individual recommended for award, any of its personnel, or its agents, or its sub-consultants, sub-contractors, service providers, suppliers and/ or their employees, has, directly or indirectly, engaged in corrupt, fraudulent, collusive, coercive, or obstructive practices in competing for the contract in question;

d) Pursuant to the Kenya's above stated Acts and Regulations, may sanction or recommend to appropriate authority(ies) for sanctioning and debarment of a firm or individual, as applicable under the Acts and Regulations;

e) Requires that a clause be included in Tender documents and Request for Proposal documents requiring (i) Tenderers (applicants/proposers), Consultants, Contractors, and Suppliers, and their Sub-contractors, Sub-consultants, Service providers, Suppliers, Agents personnel, permit the PPRA or any other appropriate authority appointed by Government of Kenya to inspect[2] all accounts, records and other documents relating to the procurement process, selection and/or contract execution, and to have them audited by auditors appointed by the PPRA or any other appropriate authority appointed by Government of Kenya; and

f) Pursuant to Section 62 of the above Act, requires Applicants/Tenderers to submit along with their Applications/Tenders/Proposals a “Self-Declaration Form” as included in the procurement document declaring that they and all parties involved in the procurement process and contract execution have not engaged/will not engage in any corrupt or fraudulent practices.

---

[1] *For the avoidance of doubt, a party's ineligibility to be awarded a contract shall include, without limitation, (i) applying for pre-qualification, expressing interest in a consultancy, and tendering, either directly or as a nominated sub-contractor, nominated consultant, nominated manufacturer or supplier, or nominated service provider, in respect of such contract, and (ii) entering into an addendum or amendment introducing a material modification to any existing contract.*

[2] *Inspections in this context usually are investigative (i.e., forensic) in nature. They involve fact-finding activities undertaken by the Investigating Authority or persons appointed by the Procuring Entity to address specific matters related to investigations/audits, such as evaluating the veracity of an allegation of possible Fraudand Corruption, through the appropriate mechanisms. Such activity includes but is not limited to: accessing and examining a firm's*

or individual's financial records and information, and making copies thereof as relevant; accessing and examining any other documents, data and information (whether in hard copy or electronic format) deemed relevant for the investigation/audit, and making copies thereof as relevant; interviewing staff and other relevant individuals; performing physical inspections and site visits; and obtaining third party verification of information.

2. FORM OF TENDER SECURITY - DEMAND BANK GUARANTEE / INSURANCE GUARANTEE

Beneficiary:_____ Request for Tenders No:_____ Date:_____ TENDER GUARANTEE No.:___

Guarantor: _____

1. We have been informed that_____(herein after called "the Applicant") has submitted or will submit to the Beneficiary its Tender (herein after called "the Tender") for the execution of _____under Request for Tenders No._____(“the ITT”).

2. Furthermore, we understand that, according to the Beneficiary's conditions, Tenders must be supported by a Tender guarantee.

3. At the request of the Applicant, we, as Guarantor, hereby irrevocably undertake to pay the Beneficiary any sum or sums not exceeding in total an amount of (_____) upon receipt by us of the Beneficiary's complying demand, supported by the Beneficiary's statement, whether in the demand itself or a separate signed document accompanying or identifying the demand, stating that either the Applicant:

   a) Has withdrawn its Tender during the period of Tender validity set forth in the Applicant's Letter of Tender (“the Tender Validity Period”), or any extension there to provided by the Applicant; or

   b) Having been notified of the acceptance of its Tender by the Beneficiary during the Tender Validity Period or any extension thereto provided by the Applicant, (i) has failed to execute the contract agreement, or (ii) has failed to furnish the Performance.

4. This guarantee will expire: (a) if the Applicant is the successful Tenderer, upon our receipt of copies of the contract agreement signed by the Applicant and the Performance Security and, or (b) if the Applicant is not the successful Tenderer, upon the earlier of (i) our receipt of a copy of the Beneficiary's notification to the Applicant of the results of the Tendering process; or(ii)twenty-eight days after the end of the Tender Validity Period.

5. Consequently, any demand for payment under this guarantee must be received by us at the office indicated above on or before that date.

_____

[signature(s)]

4. FORM OF TENDER-SECURING DECLARATION

[The Bidder shall complete this Form in accordance with the instructions indicated]

Date:..... *[insert date (as day, month and year) of Tender Submission]*

Tender No.:..... *[insert number of tendering process]*

To:.....

[insert complete name of Purchaser] I/We, the undersigned, declare

that:

1. I/We understand that, according to your conditions, bids must be supported by a Tender-Securing Declaration.

2. I/We accept that I/we will automatically be suspended from being eligible for tendering in any contract with the Purchaser for the period of time of [insert number of months or years] starting on [insert date], if we are in breach of our obligation(s) under the bid conditions, because we–(a) have withdrawn our tender during the period of tender validity specified by us in the Tendering Data Sheet; or (b) having been notified of the acceptance of our Bid by the Purchaser during the period of bid validity, (i) fail or refuse to execute the Contract, if required, or (ii) fail or refuse to furnish the Performance Security, in accordance with the instructions to tenders.

3. I/We understand that this Tender Securing Declaration shall expire if we are not the successful Tenderer(s), upon the earlier of:
   a) our receipt of a copy of your notification of the name of the successful Tenderer; or
   b) thirty days after the expiration of our Tender.

4. I/We understand that if I am/we are/in a Joint Venture, the Tender Securing Declaration must be in the name of the Joint Venture that submits the bid, and the Joint Venture has not been legally constituted at the time of bidding, the Tender Securing Declaration shall be in the names of all future partners as named in the letter of intent.

Signed……..……..

Capacity / title (director or partner or sole proprietor, etc.) …….…….

Name:……..

Duly authorized to sign the bid for and on behalf of: *[insert complete name of*

Tenderer] Dated on……. day of…….……. *[Insert date of*

signing]

Seal or stamp

5. Appendix to Tender

Schedule of Currency requirements

Summary of currencies of the Tender for_____*[insert name of Section of the Works]*

Name of currency	*Amounts payable*
Local currency:_____	
Foreign currency #1:_____	
Foreign currency #2:_____	
Foreign currency #3:_____	
Provisional sums expressed in local currency _____	[To be entered by the Procuring Entity]

6. TECHNICAL PROPOSAL

The tender shall complete these sections as a Technical proposal to indicate how he/she intends to proceed with the works. The Procuring entity will review these Proposals and determine the extent to which they meet the required standards to complete the works.

6.1 Site Organization

[insert Site Organization information]

6.2 Method Statement

[insert Method Statement]

6.3 Mobilization Schedule

[insert Mobilization Schedule]

6.4 Construction Schedule

[insert Construction Schedule]

PART 2 - WORKS' REQUIREMENTS

SECTION V - BILLS OF QUANTITIES

PREAMBLE TO BILL OF QUANTITIES

1. The Bills of Quantities forms part of the Contract Documents and are to be read in conjunction with the Instructions to Bidders, Conditions of Contract Parts I and II, Specifications and Drawings.

2. The brief description of the items in the Bills of Quantities is purely for the purpose of identification, and in no way modifies or supersedes the detailed descriptions given in the conditions of Contract and Specifications for the full direction and description of work and materials.

3. The Quantities set forth in the Bills of Quantities are estimated, representing substantially the work to be carried out, and are given to provide a common basis for bidding and comparing of Bids. There is no guarantee to the Contractor that he will be required to carry out all the quantities of work indicated under any one particular item or group of items in the Bill of Quantities. The basis of payment shall be the Contractor's rates and the quantities of work actually done in fulfilment of his obligation under the Contract.

4. Payments will be made on completed milestones
5. Payments for emergency and/or instructed works will be paid as and when they occur using submitted rates and/or day works and shall require prior approval of the Employer.

6. The prices and rates inserted in the Bills of Quantities will be used for valuing the work executed, and the Engineer will only measure the whole of the works executed in accordance with this Contract.

7. A price or rate shall be entered in ink against every item in the Bills of Quantities with the exception of items that already have Provisional sums affixed thereto. The bidders are reminded that no “nil” or “included” rates or “lump-sum” discounts will be accepted. The rates for various items should include discounts if any. Bidders who fail to comply will be disqualified.

8. Provisional sums (including Day-works) in the Bills of Quantities shall be expended in whole or in part at the discretion of the Engineer.

9. The price and rates entered in the Bills of Quantities shall, except in-so-far as it is otherwise provided under the Contract, include all Constructional plant to be used, labour, insurance, supervision, compliance testing, materials, erection, maintenance of works, overheads and profits, taxes and duties together with all general risks, liabilities and obligations set out or implied in the Contract, transport, electricity and telephones, water, use and replenishment of all consumables, including those required under the contract by the Engineer and his staff.

10. Unless otherwise stated, all measurements shall be net taken on the finished work carried out in accordance with the details shown on the drawings or instructed, with no allowance for extra cuts or fills, waste or additional thickness necessary to obtain the minimum finished thickness or dimensions required in this Contract. Any work performed in excess or the requirements of the plans and specifications will not be paid for, unless ordered in writing by the Engineer.

11. Unbalanced tenders and/or unrealistic rates shall lead to the tenderer being subjected to enhanced Perfomance Security requirements pursuant to Instruction to Tnderers section 38.2 (b) of Tender Data Sheets.

BILL OF QUANTITIES

ROAD SECTION: JN A3-DIISO (C-291) ROAD.					
ROAD CODE: C-291					
PACKAGE: KeRRA/08/GSA/39/005/2022-23					
	BILL OF QUANTITES				**Page: 1**
BILL NO:					
ITEM NO.	**DESCRIPTIONS**	**Unit**	**Quantities**	**Unit bid rate(Kshs)**	**Amount (Kshs)**
01-80-030	**Allow a prime costfor attendance to the REs supervisory staff including overtime.**	**M^2**	**325,500.00**	**1**	**325,500.00**
	Total carried Forward to Summary				**325,500.00**

ROAD SECTION: JN A3-DIISO (C-291) ROAD.					
ROAD CODE: C-291					
PACKAGE: KeRRA/08/GSA/39/005/2022-23					
	BILL OF QUANTITES				Page: 2
BILL NO:					
ITEM NO.	DESCRIPTIONS	Unit	Quantities	Unit bid rate(Kshs)	Amount (Kshs)
04-50-004	Light bush clearing as instructed by the engineer.	M2	60,000.00		
	Total carried Forward to Summary				

ROAD SECTION: JN A3-DIISO (C-291) ROAD.					
ROAD CODE: C-291					
PACKAGE: KeRRA/08/GSA/39/005/2022-23					
	BILL OF QUANTITES				Page: 3
BILL NO:					
ITEM NO.	DESCRIPTIONS	Unit	Quantities	Unit bid rate(Kshs)	Amount (Kshs)
05-50-006	Fill in soft material and compact as instructed by the engineer.	M3	900.00		
	Total carried Forward to Summary				

ROAD SECTION: JN A3-DIISO (C-291) ROAD.					
ROAD CODE: C-291					
PACKAGE: KeRRA/08/GSA/39/005/2022-23					
	BILL OF QUANTITES				Page: 4
BILL NO:					
ITEM NO.	DESCRIPTIONS	Unit	Quantities	Unit bid rate(Kshs)	Amount (Kshs)
08-60-027	Culvert installation 900mm with surround as instructed by the Engineer.	M	90.00		
	Total carried Forward to Summary				

ROAD SECTION: JN A3-DIISO (C-291) ROAD.

ROAD CODE: C-291

PACKAGE: KeRRA/08/GSA/39/005/2022-23

	BILL OF QUANTITES				**Page: 5**
BILL NO:					
ITEM NO.	**DESCRIPTIONS**	**Unit**	**Quantities**	**Unit bid rate(Kshs)**	**Amount (Kshs)**
10-50-003	**Light grading as instructed by the Engineer.**	**M**	**77,550.00**		
	Total carried Forward to Summary				

ROAD SECTION: JN A3-DIISO (C-291) ROAD.		
ROAD CODE: C-291		
PACKAGE: KeRRA/08/GSA/39/005/2022-23		
	BILL OF QUANTITES	**Page: 5**
	SUMMARY	**Project:**
ITEM NO.	**DESCRIPTIONS**	**Amount (Kshs)**
1	**General Office administration and overheads/Preliminaries**	**325,500. 00**
4	**Site Clearance.**	
5	**Earthworks**	
8	**Culvert and drainage works**	
10	**Grading and Gravelling Works**	
	Sub-Total:	
	VAT @ 16 %	
	Total	
	Contingencies (@ 0 %)	
	Carried to Page on the Form of Tender:	

SECTION VI - SPECIFICATIONS

[In drafting of the Specification, care must be taken when drafting the Work's Requirements to ensure that the requirements are not restrictive. Recognized international standards should be used as much as possible for the description of goods, materials and workmanship. Where other particular standards are specified, whether national standards or other standards, it should be stated that goods, materials and workmanship meeting other authoritative standards and which promise to ensure equal or higher quality than the standards specified, will also be acceptable. Where a brand name of a productis specified it should always be qualified with the terms "orequivalent".]

Notes for preparing Specifications

1. Specifications must be drafted to present a clear and precise statement of the required standards of materials, and workmanship for tenderers to respond realistically and competitively to the requirements of the Procuring Entity and ensure responsiveness of tenders. The Specifications should require that all materials, plant, and other supplies to be permanently incorporated in the Works be new, unused, of the most recent or current models, and incorporating all recent improvements in design and materials unless provided otherwise in the Contract.Where the Contractor is responsible for the design of any part of the permanent Works, the extent of his obligations must be stated.

2. Specifications from previous similar projects are useful and may not be necessary to re-write specifications for everyWorks Contract.

3. There are considerable advantages in standardizing **General Specifications** for repetitive Works in recognized public sectors, such as highways, urban housing, irrigation and water supply. The General Specifications should cover all classes of workmanship, materials and equipment commonly involved in constructions, although not necessarily to be used in a particular works contract. Deletions or addenda should then adapt the General Specifications to the particular Works.

4. Care must be taken in drafting Specifications to ensure they are not restrictive. In the Specifications of standards for materials, plant and workmanship, existing Kenya Standards should be used as much as possible, otherwise recognized international standards may also be used.

5. The Procuring Entity should decide whether technical solutions to specified parts of the Works are to be permitted. Alternatives are appropriate in cases where obvious (and potentially less costly) alternatives are possible to the technical solutions indicated in tender documents for certain elements of the Works, taking into consideration the comparative specialized advantage of potential tenderers.

6. The Procuring Entity should provide a description of the selected parts of the Works with appropriate reference to Drawings, Specifications, Bills of Quantities, and Design or Performance criteria, stating that the alternative solutions shall be atleast structurally and functionally equivalent to the basic design parameters and Specifications.

7. Such alternative solutions shall be accompanied by all information necessary for a complete evaluation by the Procuring Entity, including drawings, design calculations, technical specifications, breakdown of prices, proposed construction methodology, and other relevant details. Technical alternatives permitted in this manner shall be considered by the Procuring Entity each on its own merits and independently of whether the tenderer has priced the item as described in the Procuring Entity's design included with the tender documents.

STANDARD SPECIFICATIONS

The Standard Specifications referred to in this document is the ***Standard Specifications for Road and Bridge Construction, 1986 Edition*** published by the Ministry of Transport and Communications. This document shall form part of the Contract.

Work shall be carried out in accordance with the Standard Specification except as supplemented or revised in the Special Specification.

A. SPECIAL SPECIFICATIONS

SECTION 1 – GENERAL

100 SPECIAL SPECIFICATIONS.

Special specification is supplementary to the Standard Specifications and the two must be read in conjunction. In any case where there appears to be conflict betweenthe two then the Special Specifications will take precedence.

101 Location and Extent of Site.

The Road Project is located in Township Constituency of Garissa County.
The site of the works shall be the area within the road reserve and any other places as may be designated by the contract.
Any other works shall be as directed by the Engineer.

102 Extent of Contract.

The Major Works to be executed under the Contract comprise mainly but are not limited to the following:

- **Site clearance as instructed by the Engineer.**
- **Earth works as directed by the Engineer.**
- **Grading and Gravelling works as instructed by the Engineer.**

103 PROGRAMME OF EXECUTION OF THE WORKS

The Contractor shall provide the works programme, required under clause 14 of the Conditions of Contract, within 21 days of receipt of the Engineer's Order to commence work.

The programme shall be co-ordinated with climatic and other conditions to provide for the completion of the works in the order and by the time specified.

The Contractor shall carry out the contract in accordance with the programme agreed with the Engineer, but he shall in no manner be relieved by the Engineer's approval of the programme, of his obligation to complete the works in the prescribed order and by the prescribed completion date and he shall from time to time review his progress and make such amendments to his rate of execution of the works as may be necessary to fulfil his obligations.

104 ORDER OF EXECUTION OF WORKS

In addition to Clause 105 of the Standard Specification the Contractor shall carry out the Works such that a continuous and consecutive output of fully completed work is achieved.

105 TAKING OVER CERTIFICATE

Taking over certificate shall be issued upon completion of all instructed activities.

106 METHOD OF CONSTRUCTION AND HOURS OF ATTENDANCE BY THE ENGINEER'S REPRESENTATIVE ON SITE

1. At the commencement of the contract the Contractor will submit in writing to the Engineer, the hours which shall be considered normal working hours, togetherwith the day of the week to be set aside for rest. When approved these shall be maintained throughout the continuance of the Contract.

2. Notwithstanding the provision of the last paragraph of clause 108 of the Standard Specification, the Engineer's Representative normal working hours shall be 8 hours from Monday to Friday and 5 hours on Saturday with Sunday set aside forrest.

If the Contractor wishes to execute permanent works outside these hours, he shall meet anyextra

costs arising thereof in addition to giving a day's notice in writing.

107 NOTICE OF OPERATIONS

Terms:

It shall be the Contractor's responsibility to notify the Engineer when any item of works scheduled are completed and ready for approval, and the Contractor shall givesufficient notice to allow control test to be performed.

Explosive and Blasting:

(a) The requirements of the Laws of Kenya governing explosives and other requirements and regulations of Government of Kenya and other authorities shall be complied with.

(b) No explosives of any kind shall be used without prior written consent of the Engineer.

(c) The Contractor shall be solely responsible for the provision, handling, and storage and transporting of all explosives, ancillary materials and all other items of related kind whatsoever required for blasting.

117 HEALTH, SAFETY AND ACCIDENTS

In addition to providing, equipping and maintaining adequate first aid stations throughout the works in accordance with the laws of Kenya, the Contractor shall provide and maintain on site during the duration of the Contract, a fully equipped dispensary. This shall be with a qualified Clinical Officer / Nurse who shall offer the necessary medical advice on COVID-19, HIV/AIDS and related diseases to the Engineer's and Contractor's Site staff. The Contractor shall allow for this in the rates and be responsible for all site welfare arrangements at his own cost.

The contractor shall take an active role in civic and public health education for his employeesand the community in general. To this end, he shall liaise with the regional office of the Ministry of Health with respect to drawing up and carrying out COVID-19 and HIV/AIDS awareness programmes and testing campaigns for his staff, and initiate and coordinate theseas detailed in Clause 143 of the Specifications.

Bill No. 25 is included in the Bills of Quantities for COVID-19 & HIV/AIDS awareness/ counselling/testingactivities. The Contractor shall in consultation with regional service providers from the Ministry of Health, develop and include in his tender a COVID-19 mitigation measures, HIV/AIDS awareness, testing programmes and cost estimates for approval by the Supervisor, to be funded under this item.

The Contractor shall allow the dissemination and appropriate intervention and remedial measures to curb the spread of COVID-19 pandemic & HIV/AIDS scourge within his camps. These measures will include making condoms readily available to all his staff.

The Contractor shall maintain records of health and safety and make reports concerning the health and safety of his employees as the Supervisor may from time to time prescribe. The Contractor shall at all times take the necessary precautions to protect all staff and labour employed on the site from insect nuisance, rats and other pests and reduce the dangers to health and the general nuisance occasioned by the same. The Contractor shall, so far as is reasonably practicable, having regard to local conditions, provide on the site an adequate supply of drinking and other water for the use of his staff and labour.

The Contractor shall allow in his prices and be responsible for the cost of all site welfare arrangements.

119 USE OF EXPLOSIVES

The Contractor shall ensure that he complies with the current Government regulations with regard to explosives. No explosives of any kind shall be used without prior consent of the Supervisor. The Contractor shall be solely responsible for the provision, handling, storage and transporting of

all explosives ancillary materials and all other items of related kind whatsoever required for blasting.

120 PROTECTION OF EXISTING WORKS

The appropriate provisions of Section 1 of the Standard Specifications in regards to protection of existing works and services shall be adhered to in all respects.

The Contractor's attention is drawn to the fact that it is essential to maintain existing power, telephone, water, sewage and other services throughout the Contract Period.

The Contractor shall give all assistance to Engineers of the Telkom Kenya, the Kenya Power and Lighting Co. Ltd., the Ministry of Water and other relevant authorities to maintain the serviceability of their installations.

121 DIVERSION OF SERVICES

Refer to **Section 2603.**

123 LIAISON WITH GOVERNMENT AND POLICE OFFICIALS

The Contractor shall keep in close touch with the Police and the other Government officials of the area regarding their requirements in the control of traffic, or other matters, and shall provide all assistance or facilities, which may be required by such officials in the execution of their duties.

124 LAND FOR ALL CAMPS SITES AND FOR THE CONTRACTOR'S OWN PURPOSES, INCLUDING TEMPORARY WORKS.

On or before completion of the Contract, the Contractor shall remove all temporary works and shall restore all such land to the condition in which it was immediately prior to the occupation thereof as far as is reasonable and practicable. No separate payment will be madeto the Contractor on account of these items and the Contractor must make due allowance forthem in his rates.

Notwithstanding Clause 120 of the Standard Specifications, the Contractor shall be required to appoint competent surveyors who will liaise with the Engineer on matters related to the demarcation of the existing road reserve, site measurements, removal and reinstatement of existing services.

126 MATERIAL AND MANUFACTURED ARTICLES

Notwithstanding the provision of clause 126 of the Standard Specification, the Contractor's attention is drawn to his obligation with regard to quality and delivery schedule of materials and goods obtained from suppliers. Should the Engineer at any time be dissatisfied with any goods and materials intended for use or used by the contractorupon the works, he shall be empowered to reject goods and materials and shall order that hey be replaced by others of acceptable quality. Any more work that may consequently have to be redone and the cost thereof of the new suppliers shall all be borne by the Contractor.

127 INFORMATION FROM EXPLORATORY BORING AND TEST PITS

Notwithstanding the provisions of clause 127 of the Standard Specification, the materials report if made available to bidders will not form part of the contract documents and will only be for information. The Engineer will not be responsible for the suitability of the borrow pits provided by him or shown on the drawings.

128 STORAGE OF MATERIALS

All materials shall be stored on Site in a manner approved by the Engineer and the Contractorshall carefully protect from the weather all work and materials which may be affected thereby.

129 TEST CERTIFICATES

When instructed by the Engineer the Contractor shall submit certificates of test from the suppliers of materials and goods required in connection with the works as the Engineer may require.

Such certificates shall certify that the materials or goods concerned have been tested in accordance with the requirements of the specifications and shall give the results of all the tests carried out. The Contractor shall provide adequate means of identifying the materials and goods delivered to the site with the corresponding certificates.

131 SIGNBOARDS

The Contractor shall provide and erect publicity signboards on the site as directed. The Engineer shall, as shown in the Drawings, direct the minimum dimensionsof the boards. The boards shall be prepared, primed and painted cream and lettered in black. The boards shall be of stout construction, resistant to the effects of weather.

132 HOUSING ACCOMMODATION FOR THE RESIDENT ENGINEER AND HIS STAFF, OFFICE AND LABORATORY INCLUDING FURNITURE

132.1 HOUSING AND ACCOMMODATION FOR THE ENGINEER'S SENIOR STAFF:

The contractor shall provide rent for the Engineer's site staff. This staff will generally comprise the following;

Designation	Number
Resident Engineer	1
Assistant Resident Engineer	1
Materials Engineer	1
Site Surveyor	1
Senior Inspector	1
Senior Lab. Technologist	1
Inspectors	4
Lab Technician	3
CAD Technician	1
Senior Lab. Technologist	1
Inspectors	4

Payment shall be as per the bills of quantities.

132.4 HOUSING ACCOMMODATION FOR ENGINEER'S JUNIOR STAFF

The Contractor shall provide rent for the Engineer's junior staff as appropriate.

132.7 ENGINEER'S OFFICE, FURNITURE AND EQUIPMENT

The Contractor shall provide a furnished and equipped main office of plan area not smaller than 155 metre squares that is equivalent of the MOR Standard Resident Engineer's Office. This office shall be of weather-proof construction, provided with mosquito proof and burglar-proof windows and lockable doors and suitably insulated against heat and cold, all to the satisfaction of the Engineer. The room to be occupied by the Engineer's Representative and its front office shall be provided with a floor carpet to be approved by the Engineer. All other floors shall be given a PVC tile finish using approved adhesive including 150mm wood skirting or superior finish. The windows shall be fitted with curtainsand blinders.

The office for the Resident Engineer shall be completely separate from that of the Contractor.

Latrines and washrooms graded to staff seniority, together with a drinkable water supply and waterborne sewage disposal shall be provided for the office. The Contractor shallalso provide 24 hours a day security and electricity supply to the offices and shall allow forany water and electricity consumed and for any statutory charges associated.

The main office shall revert to the contractor at the end of the project.

The Contractor may be instructed by the Engineer under clause 58 of the General Conditions of Contract to make payments of general receipted accounts for such items as stationery, stores, furniture and equipment, claims and allowances for supervision personnel and any miscellaneous claims or the Engineer may direct the Contractor to purchase or pay for the above. The Contractor will, on provision of receipts, be paid under appropriate bill items in the BOQ.

Further, the Contractor shall, as provided for in the Bills of Quantities provide and maintainthe listed office furniture and equipment as specified in the Appendix to Bill item 1.03 of Bill of Quantities with a dealer's certificate and warranty accompanying the furniture and equipment.

All office furniture and equipment bought under the Contract shall revert to the Employer at the end of the project. Payment for provision of the office including the furniture shallbe paid against the appropriate bill items in the BOQ.

132.8 ENGINEER'S LABORATORY AND SURVEY EQUIPMENT

The Contractor shall provide Engineer's laboratory as shown in the Book of Drawings and provide all the laboratory equipment, reagents and survey equipment as required by the Engineer. The Contractor shall be paid under appropriate bill items in the Bills of Quantities or on provision of receipts as required by the Engineer.

.

The Contractor may be directed to pay for stationery, equipment or reagents that are foresaid and also pay for servicing and repair of the laboratory equipment being used on the project.

The Contractor shall provide, install and maintain in a good state of repair, such laboratory,survey and other equipment as listed for the duration of the contract.

Such equipment shall be of approved manufacture, and shall be made available to the Engineer for the Engineer's exclusive use throughout the Contract, not later than three weeks after the Engineer's order to supply. All equipment shall be ready to use and complete to perform the tests. The equipment shall revert to the Employer on completion of the Contract. The laboratory shall revert to the Contractor at the end of the Contract.

Any delays to the Contractor or the Contractor's activities caused by the Engineer being unable to perform survey work, field or laboratory tests due to the Contractor's failure to supply and/or maintain the said equipment shall be deemed to have been caused entirely by the Contractor's own actions, and any consequences of such delays shall be interpreted as such.
The payment to comply with this requirement is provided in the Bill of Quantities and ownership of all equipment shall revert to the Employer after the completion of the Works.

Failure by the Contractor to provide or maintain the equipment shall make him responsibleto bear all costs that may be incurred as a result of the Engineer's staff using alternative means of communication,including delays in supervision and approval of Works bythe Engineer. List of Laboratory and Survey Equipment shall revert to the Employer at the end of the Contract.

The laboratory equipment shall be purpose-made for use in highways materials testinglaboratories and shall comply with the relevant British (BS) or American (AASHTO) Standards.

Resident Engineer's Laboratory Furniture and Equipment
As listed in the Appendix to the bills of quantities.

Resident Engineer's Survey Equipment

As listed in the Appendix to the Bills of quantities.

Survey/Road Design/Bridge Design Software

Where provided for in the Appendix to the Bills of Quantities, the Contractor shall supply the software complete with 5 No. stand-alone user licenses for the duration of the project. The cost shall include supply, installation, maintenance and training of not more than 5 No. Engineer's staff.

137 ATTENDANCE UPON THE ENGINEER AND HIS STAFF

The Contractor shall pay wages (including all overtime) and house all attendant staff to fulfil the requirements of Clause 137 of the Standard Specification. The number of staff required shall be as instructed by the Engineer. The Contractor will be paid on a prime cost basis plus a percentage for overheads and profits under appropriate items inthe Bills of Quantities.

138 VEHICLES AND DRIVERS FOR THE ENGINEER AND HIS STAFF AND METHOD OF PAYMENT

The Contractor shall, when instructed to do so, provide and maintain the vehicles in good working condition provided for in the Bills of Quantities for the exclusive use by the Engineer and his staff throughout the contract.

The Contractor shall insure comprehensively the vehicles for any licensed drivers and shallprovide competent drivers during normal working hours and whenever required by the Engineer.

Should any vehicle supplied not be in road worthy condition, the Contractor shall provide an acceptable equivalent replacement vehicle until such time as the original vehicle is repaired to the satisfaction of the Engineer and returned for use.

Payment for the vehicles (up to 5,000Km.), shall be by vehicle months. Payment for mileage above 5,000Km shall be made at a rate per Kilometre. These payments shall be inclusive of all fuels, lubricants, servicing, insurance, maintenance, drivers and repairs. The rate shall include any overtime the drivers might be due or any other allowances in addition to the normal working hours. Payment shall be made under appropriate items in the Bills of Quantities.

The vehicles shall revert to the Contractor at the end of the contract. Where there is a provision in the BoQ for reversion to the Employer, such action shall be effected upon instruction by the Engineer and paid for under the corresponding bill item.

139 RECEIPTED ACCOUNTS

The Contractor maybe instructed by the Engineer to make payments of general miscellaneous accounts for such items as stationary, stores and equipment and

miscellaneous supervision personnel and claims or the Engineer may direct the Contractor to purchase or pay for the above. The Contractor will be paid on a prime cost basis plus a percentage for overheads and profits under appropriate items in the Bills of Quantities.

140 PAYMENT OF OVERTIME FOR ENGINEER'S JUNIOR STAFF

Delete this clause entirely and substitute with:

"If the Contractor wishes to execute permanent work outside the Supervisor's normal working hours, as stated in Clause 108 of the Special Specification, then the payment for the overtime for the Supervisor's Junior Staff shall be reimbursedin full by the Contractor to the Supervisor's Representative including 20% for Administrative overheads

If the Contractor wishes to execute works on the regular basis outside the Supervisor's normal working hours (Clause 108) over a prolonged period, the Supervisor may, if he deems necessary, employ additional supervisory staff for which the required salaries including the percentage for administrative overheads shall be in full by the Contractor to the Supervisor's Representative and

the Contractor shall provide the required adequate accommodation facilities for such staff at his own costs.

The Contractor shall not be reimbursed any of these costs."

141 MEASUREMENT AND PAYMENT

All measurements and payments shall be as per the Standard Specifications.

142 LIQUIDATED DAMAGES

The rate of Liquidated Damages shall be as indicated in the Appendix to Form of Bid.

144 COMPLIANCE WITH SPECIFICATIONS AND REMEDIAL WORK

All materials, plant, labour and workmanship in and connected with the execution of the works shall be the best of their respective kinds without regard to any trade terms and the Contractors shall comply to these and in other respects with the relevant clauses and shall carry out the contract in a proper and workmanlike manner and in strict accordance with the working drawings and instructions of the Supervisor.

When any part of the Works or any plant or material is found upon examinationby the Supervisor not to conform to the requirements or is at any stage before final acceptance damaged so that it no longer conforms to the requirements of the Specifications, the Supervisor may order its complete removal and replacement, at the Contractor's expense, with satisfactory work, plant or material or he may permit the Contractor to apply remedial measures in order to make good any such defects or damage. The actual remedial measures taken shall at all times be entirely at the Contractor's own initiative, risk and cost, but subject to the Supervisor's approval regarding the details thereof.

In particular, remedial measures must ensure full compliance with the Specifications for the final product, shall not endanger or damage any other partof the Works and shall be carefully controlled and submitted to the Supervisor for examination when completed or at any intermediate stage as may be required.

For the guidance, an indication is given below of what would normally be required in the more common cases of defects or damage, but the Supervisor will in no way be bound to approve of or adhere to the measures given below as the actual remedial measures will be dictated by the circumstances of each particular case.

(a) Earthworks

i) Where a cut slope has been over excavated or under cut, backfilling will notnormally be allowed and the entire slope may have to be re-trimmed to obtain auniform slope.

ii) Where the floor of a cutting has been taken too deep, it will normallyrequire backfilling and re-compacting with selected gravel in the case of soil or gravel excavations and with crushed stone material or suitably sized rock in the case of hard excavations. All necessary measures shall be taken to drain awayground water that may accumulate in backfilled sections.

iii) Excess widths of fills will have to be trimmed back.

iv) Where erosion has damaged the surface of cuts or fills, the damage shall bemade good by backfilling with suitable material and re-trimming. In more serious cases, the slopes may have to be cut back and back-filled by benching and compacting to the required standard of compaction with suitable small equipment and then re-trimmed.

(b) Stabilising

Any sections failing to meet the requirements specified or damaged to the extentthat they require

breaking up and re-compaction will have to be re-stabilised with the type and quantity of stabilising agent ordered by the Supervisor. The Supervisor may also order that the layer be removed entirely and replaced with fresh material to be stabilised.

(c) Local Defects in Pavement Layers

Where remedial measures are taken to make good local defects, the length and width of the area to be repaired by machines shall be such as will be necessary to accommodate the full width of the machines used and a reasonable length to ensure effective operation.

The depth to which material will have to be removed will depend on the type of material. Gravel will require breaking up to a depth of at least 75mm and crushed stone will usually require breaking up over its full depth. Asphalt material will normally require removal for its full depth.

(d) Concrete

Concrete work will normally require the cutting back and complete removal of any weak or honeycombed sections and making good using special epoxy adhesives to bind fresh concrete to old concrete. Cracks when permitted to remain, shall be injected with suitable epoxy compounds and test cores drilled to test the efficiency of the injection process.

145 AVAILABILITY OF MATERIALS

The Contractor shall be responsible for obtaining all materials from any local or foreign source. The Contracting Authority shall not be liable for any additional costs due to shortage of materials.

The material located by the Contractor shall be subject to the approval of the Supervisor before use of the Works.

146 ENVIRONMENTAL QUALITY PROTECTION

This section shall cover the implementation of all the provisions covered in the NEMA Licenses and shall not whatsoever be limited to the items detailed below.

146.1 Landscape Preservation

a) The Contractor shall exercise care to preserve the natural landscape and shall conduct his construction operations so as to prevent any unnecessary destruction, scarring, or defacing of the natural surroundings in the vicinity of the work. Except where clearing is required for permanent works, approved construction roads, or excavation operations, all trees, native shrubbery, and vegetation shall be preserved and shall be protected from damage by the Contractor's construction operations and equipment. The edges of clearings and cuts through trees, shrubbery and vegetation shall be irregularly shaped to softenthe undesirable visual impact of straight lines. Movement of crews and equipment within the right-of-way and over routes provided for access to the work shall be performed in a manner to prevent damage to grazing land, crops and other property.

(b) **Reseeding and Replanting**

Special reseeding or replanting will not be required under these specifications; however, on completion of the work, all non-permanent works shall be scarified and left in a condition that will facilitate natural re-vegetation, provide for proper drainage, and prevent erosion. All non-permanent works destruction, scarring, damage or defacing of the landscape resulting from the Contractor's operations shall be repaired, replanted, reseeded, or otherwise corrected as directed by the Supervisor and at the Contractor's expense.

The Contractor shall tend to grass and tree seedlings planted under this section for a period not less than half the project construction period to allow for them to take root.

(c) **Construction Roads**

The location, alignment and grade of construction roads shall be subject to approval of the Supervisor. When no longer required by the Contractor, construction roads shall be restored to the original contour and made impassable to vehicular traffic. The surfaces of such construction

roads shall scarified as needed to provide a condition which will facilitate natural re-vegetation, provide for proper drainage and prevent erosion.

(d) **Construction Facilities**

The Contractor's camp, workshop, office, and any other construction facilities shall be located and arranged in a manner to preserve trees and vegetation to the maximum practicable extent. On completion of the Works, all storage and construction buildings, including concretefootings and slabs, and all construction materials and debris shall be removed from the site. The area shall be re-graded, as required, so that all surfaces drain naturally, blend with the natural terrain and are left in a condition that will facilitate natural re-vegetation, provide for proper drainage and prevent erosion.

(e) **Blasting Precautions**

The Contractor shall adopt precautions when using explosives which will prevent scattering of rocks, stumps, or other debris outside the work area and prevent damage to surrounding trees, shrubbery and vegetation.

146.2 Preservation of Trees and Shrubbery

a) **Preservation**

All trees and shrubbery which are not specifically required to be cleared or removed for construction purposes shall be preserved and shall be protected from any damage that may be caused by the Contractor's construction operations and equipment.

Special care shall be exercised where trees or shrubs are exposed to injuries by construction equipment, blasting, excavating, dumping, chemical damage, or other operations; and the Contractor shall adequately protect such trees by use of protective barriers or other methods approved by the Supervisor. The removal of trees or shrubs will be permitted only after prior approval by the Supervisor.

The layout of the Contractor's construction facilities such as workshops, warehouses, storage areas and parking areas; location of access and haul routes; and operations in borrow and spoil areas shall be planned and conducted in such manner that all trees and shrubbery not approved for removal by the Supervisor shall be preserved and adequately protected from either direct and indirect damage by the Contractor's operations. Except in emergency cases orwhen otherwise approved by the Supervisor, trees shall not be used for anchorage. Where such use is approved, the trunk shall be wrapped with a sufficient thickness of approved protective material before any rope, cable or wire is placed.

b) **Repair of Treatment of Damage**

The Contractor shall be responsible for injuries to trees and shrubs caused by his operations. The term "injury" shall include, without limitation, bruising, scarring, tearing and breaking of roots, trunk or branches. All injured trees and shrubs shall be repaired or treated without delay,at the Contractor's expense. If damage occurs, the Supervisor will determine the method of repair or treatment to be used for the injured trees and shrubs as recommended by an experienced horticulturist or a licensed tree surgeon provided by and at the expense of the Contractor. All repairs or treatment of injured trees shall be performed under the direction of an experienced horticulturist of a licensed tree surgeon provided by and at the expense of the Contractor.

Where tree climbing is necessary, the use of climbing spurs will not be permitted. If climbing is necessary, safety ropes will be required.

c) **Replacement**

Trees or shrubs [hat, in the opinion of the Supervisor, are beyond saving shall be removed and replaced early in the next planting season. The replacements shall be the same species, or other

approved species, and of the maximum size that is practicable to plant and sustain growth in the particular environment. Replacement trees and shrubs shall be guyed, watered and maintained for a period of 1 year. Any replacement tree or shrub that dies shall be removed and replaced as directed by the supervisor, with such replacements being maintained for a period of 1 year from the date of replacement.

146.3 Prevention of Water Pollution

a) **General**

The Contractor's construction activities shall be performed by methods that will prevent entrance, or accidental spillage of solid matter, contaminants, debris and other pollutants and wastes into streams, flowing or dry watercourses, lakes, and underground water sources.Such pollutants and wastes include, but are not restricted to, refuse garbage, cement, concrete, sanitary waste, industrial waste, radioactive substances, oils, bitumen and other petroleum products, aggregate processing tailings, mineral salts, and thermal pollution.

b) **Dewatering**

Dewatering work for structure foundations or earthwork operations adjacent to, or encroaching on, streams or watercourses shall be conducted in a manner to prevent muddy water and eroded materials from entering the streams of watercourses by construction of intercepting ditches, bypass channels, barriers,

setting ponds or by other approved means. Excavated materials or other construction materials shall not be stockpiled or deposited near or on stream banks, lake shorelines,or other watercourse perimeters where they can be washed away by high water of storm runoff or can in any way encroach upon the watercourse itself.

c) **Turbidity**

Turbidity increases in a stream or other bodies of water that are caused by construction activities shall be limited to the increases above the natural turbidities permitted under the water quality standards prescribed for that stream or body of water. When necessary to perform required construction work in as stream channel, the prescribed turbidity limits may be exceeded, as approved by the Supervisor, for the shortest practicable period requiredto complete such work.

This required construction work may include such work as diversion of a stream, construction or removal of cofferdams, specified earthwork in or adjacent to a stream channel, pile driving and construction of turbidity control structures. Mechanized equipmentshall not be operated in flowing water except as necessary to construct crossings or to performthe required construction.

d) **Wastewater**

Wastewater from aggregate processing, concrete batching or other construction operations shall not be allowed to enter streams, watercourses, or other surface waters without the use of such turbidity control methods as settling ponds, gravel- filter entrapment dikes, approved flocculating processes that are not harmful to fish, recirculation systems for washing of aggregates or other approved methods. Any such wastewater discharged into surface waters shall contain the least concentration of settleable material possible. For the purpose of these specifications, settleable material is defined as that material which will settlefrom the water by gravity during a t-hour quiescent detention period.

e) **Compliance with Laws and Regulations**

The Contractor shall comply with applicable local laws, orders, regulations and water quality standards concerning the control and abatement of water pollution.

146.4 Abatement of Air Pollution

a)The Contractor shall comply with applicable local laws and regulations concerning the prevention and control of air pollution.

b) In the conduct of construction activities and operation of equipment, the Contractor shall utilize such practicable methods and devices as are reasonably available to control, prevent, and otherwise minimize atmospheric emissions or discharges of air contaminants. The emission of dust into the atmosphere will not be permitted during the manufacture, handling and storage of concrete aggregates, and the Contractor shall use such methods and equipment as are necessary for the collection and disposal, or prevention, of dust during these operations. The Contractor's methods of storing and handling cement and pozzolans shall also include means of eliminating atmospheric discharges of dust.

c) Equipment and vehicles that show excessive emissions of exhaust gases due to poor engine adjustments, or other inefficient operating conditions, shall not be operated until corrective repairs or adjustments are made.

d) Burning of materials resulting from clearing of trees and bush, combustible construction materials, and rubbish will be permitted only when atmospheric conditions for burning are considered favourable and when authorized by appropriate local air pollution or fire authorities. In lieu of burning, such combustible materials may be disposed of by other methods as provided in Clause 145.9. Where open burning is permitted, the burn piles shall be properly constructed to minimize smoke. In no case shall unapproved materials, such as tyres, plastics, rubber products, asphalt products, or other materials that create heavy black smoke or nuisance odours, be burned.

e) Storage and handling of flammable or combustible materials, provisions for fire prevention, and control of dust resulting from drilling operations shall be in accordance with the applicable provisions of construction industry safety standards.

f) Dust nuisance resulting from construction activities shall be prevented in accordance with Clause 145.5.

146.5 Dust Abatement

a) During the performance of the work required by these specifications or any operations appurtenant thereto, whether on right-of-way provided by the Contracting Authority or elsewhere, the Contractor shall furnish all the labour, equipment, materials, and means required, and shall carry out proper and efficient measures, wherever and as often as necessary to reduce the dust nuisance, and to prevent dust which has originated from his operations from damaging crops, orchards, cultivated fields, and dwellings, or causing a nuisance to persons. The Contractor will be held liable for any damage resulting from dust originating fromhis operations under these specifications on Contracting Authority right-of-way or elsewhere. The Supervisor may direct additional sprinkling or other measures for dust abatement if necessary to obtain adequate control.

146.6 Noise Abatement

The Contractor shall comply with applicable local laws, orders, and regulations oncerning the prevention, control and abatement of excessive noise. Night time blasting, the use of jackhammers, pile driving, or other operations producing high intensity impact noise may be performed only upon approval of the Supervisor.

146.7 Light Abatement

a) The Contractor shall exercise special care to direct all stationary floodlights to shine downward at an angle less than horizontal. These floodlights shall also be shielded so as not to be a nuisance to surrounding areas. No lighting shall includea residence in its direct beam.

b) The Contractor shall be responsible for correcting lighting problems when they occur as approved by the Supervisor.

146.8 Preservation of Historical and Archaeological Data

a) Local legislation provides for the protection, preservation and collection of scientific, pre-historical,

historical and archaeological data (including relics and specimens) which might otherwise be lost due to alteration of the terrain as a result of any construction project.

If necessary, an archaeological survey will be made along the proposed haul roads to establish the presence of any archaeological or historic remains.

b) Should the Contractor through his agent or any of his employees in the performance of this contract discover evidence of possible scientific, pre- historical, historical, or archaeological data, he will notify the Supervisor immediately giving the location and nature of the findings. Written confirmation shall be forwarded within 2 days.

The Contractor shall exercise care so as not to damage artefacts of fossils uncoveredduring excavation operations and shall provide such cooperation and assistance as may be necessary to preserve the findings for removal or other disposition by the Government.

c) Where appropriate, by reason of discovery or archaeological finds, the Supervisor may order delays in the time of performance, or changes in the work. or both. If necessary, an archaeological survey should be made along the

proposed haul roads to establish the extent of the cultural resources. If such delays, or changes, or both, are ordered, the time of performance and contract price shall be adjusted in accordance with the applicable clauses in the general provisions of this contract.

The Contractor shall insert this paragraph in all sub-contracts, which involve the performance of work on the terrain of the site.

146.9 Pesticides

a) Pesticides include herbicides, insecticides, fungicides, rodenticides, priscicides,surface disinfectants, animal repellants and insect repellants. Should the Contractorfind it necessary to use pesticides in work areas of this contract, he shall submithis plan for such use to the Supervisor for written approval. Such plan shall be subject to submittal to and review by a Pest Control Specialist, if necessary, before the plan is approved. Pesticides shall only be those registered with the respective agency when using pesticides.

b) The Contractor shall read and comply with all labelling requirements when using pesticides.

146.10 Clean up and Disposal of Waste Material

a) The Contractor shall, at all times, keep the construction area, including storage areas used by him, free from accumulations of waste materials or rubbish.

b) Prior to completion of the work, the Contractor shall remove from the vicinity of the work all plant facilities, buildings, rubbish, unused materials, concrete forms and such like material, belonging to him or used under his direction during construction. All work areas shall be graded and left in a neat manner conforming to the natural appearance of the landscape as provided in Clause 145.1.

c) Any residue deposited on the ground from washing out transit mix trucks or any similar concrete operations shall be buried or cleaned up in a manner acceptable to the Supervisor.

d) In the event of the Contractor's failure to perform the above work, the work may be performed by the Contracting Authority, at the expense of the Contractor, and his surety or sureties shall be liable therefore.

e) Disposal of Waste Material

(i) **General**

Waste materials including, but not restricted to, refuse, garbage, sanitary wastes,industrial wastes, and oil and other petroleum products, shall be disposed off bythe Contractor. Disposal of combustible materials shall be by

burying, where burial of such materials is approved by the Supervisor; by burning of approved materials is permitted in accordance with local laws; or by removal from the construction area. Disposal of non-combustible materials shall be by burying, where burial of such materials is approved by the Supervisor, or by removal from the construction area. Waste materials removed from the construction area shall be dumped at an approved dump area.

ii) **Disposal of Material by Burying**

Only materials approved by the Supervisor may be buried. Burial shall be inpits at locations shown on drawings or as otherwise approved by the Supervisor.
The pits shall be covered by at least 06 metres of earth material prior to abandonment.

iii) **Disposal of Material by Burning**

All burning shall be in accordance with local laws. All materials to be burned shall be piled in designated burning areas in such a manner as will cause the least fire hazards.
Burning shall be thorough and complete and all charred pieces remaining after burning, except for scattered pieces shall be removed from the construction area and disposed of an otherwise provided in this paragraph. The Contractor shall, at all times, take special precautions to prevent fire from spreading beyond the piles being burned and shall be liable for any damage caused by his burning operations. The Contractor shall have available, at all times, suitable equipment and supplies for use inpreventing and suppressing fires and shall be subject to all laws and regulations locally applicable for pre-suppression, suppression and prevention of fires.

(iv) Disposal of Material by Removal

Material to be disposed of by removal from the construction area shall be removed from the area prior to the completion of the work under these specifications. Material to be disposed of by dumping shall be hauled to an approved dump. It shall be the responsibility of the Contractor to make any necessary arrangements with private parties and with local officials pertinent to locations and regulations of such dumping. Any fees orcharges required to be paid for dumping of materials shall be paid by the contractor.

146.11 Fire and Prevention

a) The Contractor shall prepare and carry out an effective fire-protection and prevention Programme covering all phases of construction under this contract. The plan shall be submitted to the Supervisor, prior to the start of construction operations. At the option of the Contractor, the fire-protection and prevention Programme may be incorporated into a safety Programme.

b) The Contractor shall provide and maintain in a ready condition near each active work location a fire-tool cache consisting of at least one 19 litre back pump filled with water, two axes, two McLeod tools, and enough shovels to equip five workers for fire fighting purposes. A sufficient numberof employees familiar with use of the equipment shall be available at all timeswhen work is in progress. In the event of a fire resulting from project operations, the local fire-protection agency having jurisdiction shall benotified, and the Contractor shall take immediate control action with any and all available equipment and manpower.

c) In areas where significant fire hazard exists as determined by the Supervisor, the Contractor shall provide a fire patrol for 1 hour after shutdown of construction operations each day during the dry season

d) In areas where grass, bush, or other natural fuels are present and where roads or creek beds will not serve the purpose. The Contractor shall establisha firebreak on the uphill side of the project. The firebreak shall be within theright-of-way acquired by the Contracting Authority

146.12 Environmental Management Plan (EMP)

The Environmental Management Plan (EMP) prepared this project is presented at the end of this section. The Contractor will take this plan, upgrade, amend and reconcile it, where appropriate, to his construction proposals. The Supervisor's Representative will then review this plan and make necessary amendments. This will then be referred to as the Project Environmental Management Plan (PEMP). The PEMP will form the principle document upon which all Environmental Monitoring will be based throughout the project.

146.13 Measurement and Payment

No separate measurement and payment shall be made for complying with Clause 146.1 to 146.12. The cost of all work required by these clauses shall be included inthe Contractor's rates for other items of work under this Contract.

148 CONTRACTOR'S MOBILIZATION AND DEMOBILIZATION

No separate payment shall be made to the Contractor in respect of mobilization and demobilization of plant and equipment, and such costs shall be deemed to have been included in the rates entered by the Contractor in the Bills of Quantities.

SECTION 2 - MATERIALS AND TESTING OF MATERIALS

202 TESTING BY THE CONTRACTOR

Add the following paragraph to Clause 202 of the Standard Specifications

The onus rests with the Contractor to produce work which conforms in quality andaccuracy of detail to the requirements of the Specifications and drawings, and the Contractor must, at his own expense institute a quality control system to ensure adequate supervision and positive control of the Works at all times, and the Contractor must provide chainmen and labourers for the Supervisor to carry out checks on the Works.

The Contractor shall submit to the Supervisor the results of the relevant tests, measurements and levels indicating compliance with the specifications on completion of every part of the work.

The Contractor shall make his laboratory accessible to the Supervisor's Representative for cross checking the test results and inspection during material testing in the laboratory.

SIEVES

Amend the following: -

204.1 Sieve sizes

A standard set of sieves for general use shall consist of the following sieve sizes mm: 100-63-50-37.5-25-20-14-10-6.3-5-4-2-1-0.6-0.5-0.425-0.300-0.150-0.075
mm. The sieves from 0.425 to 0.075 mm shall be suited for wet sieving.

SOILS AND GRAVEL

Whenever in the Contract Document a minimum California Bearing Ratio (CBR)is specified, the CBR of the material shall be determined at the specified state of compaction.

i) After four days soaking in the case of neat materials and
ii) After seven days curing plus seven days soaking in the case of cement improved materials.

207	**CEMENT**
	Delete "KS 02-21" and replace with "KS 1725 2001 CEM 1 42.5"
211	**BITUMINOUS BINDERS** (a) Requirements: -

(i) Straight-run Bitumen

In addition to the requirements of the Standard Specification, the ash content ofpenetration grade bitumen shall not exceed 0.5% by weight.

b) Types of Bitumen

Prime coat shall be type MC 30Tack coat shall be type K 1-60

For surface dressing, binder 80/100 cut back bitumen shall be used for asphalt concrete, 80/100 penetration grade bitumen shall be used.

218 PAINT FOR ROAD MARKING

a) **Colour**

(i) White

Delete line 1 and 2 and insert:

"The colour of white marking material shall be to BS colour No. 102 of BSS331C."

(ii) Yellow

Delete line 1 and 2 and insert:

"The colour of yellow marking material shall be to BS colour No.305 (lemon) ofBSS 331 C, 1964 (Colour 0-002BCC; 1955).

b) **Drying Time**

Delete line 1, 2, and 3 and insert instead:

"The material shall have a drying time such that it can be spread uniformly on the road over the line width by the traffic line marker and shall dry sufficiently to withstand traffic within a maximum of 15 minutes after application. This condition shall be satisfied within the climate conditions obtained in any part of Kenya, provided that the bitumen surface shall be completely dry before application of the thermoplastic material and that the painted line shall remain free from water for 15 minutes from the application of the thermoplastic material by the machine or by brush."

c) **Reflectorization**

In line 3, delete "80%;'" and insert instead "85%.''

In line 4, delete "65%" and insert instead "60%".

d) **Materials**

(i) White Pigment

The pigment used for white shall contain sufficient titanium dioxide and be atleast a minimum of 29% of the total pigment composition. The titaniumdioxide shall comply with Type A (Anatase) or Type R (Rutile) of BSS 1851, 1967 except that the purity of titanium dioxide shall be 98%.

(ii) Yellow Pigment

Lead chromate yellow pigment shall be a minimum of 33% of the total pigment composition.

(iii) Solid Content

The thermoplastic material shall have a minimum solid content of 60%.

e) **Fineness of Grind**

The thermoplastic material shall have a fineness of grind reading not exceeding 75 µm.

f) **Specular Gloss at 60^0**

The thermoplastic material shall have a specular gloss of the dry film not exceeding 20.

g) **Resistance to Cold Water**

The dry material film shall show no wrinkling or blistering immediately after having been removed from the water. After a recovery period of two hours, the immersed portion of the film shall have a scratch resistance of at least 1500 g and shall have no whitening.

h) **Flexibility**

The material film shall not detach or show any signs of flaking or cracking along the bed after it has been tested with the appropriate mandrel.

i) **Hiding Power**

The thermoplastic material shall show a contact ratio of not less than 90% for white and 80% for yellow thermoplastic material.

j) **Resistance to Grit Abrasion**

The substrata shall not be visible after the abrasion test described in the standardbeing used.

k) **Resistance to Bleeding**

There shall be no colour change after the bleeding test is carried out in a mannerprescribed in the standard being used.

l) **Resistance to Diesel**

The thermoplastic material shall show no signs of blistering after the dieselresistant test of the thermoplastic material applied on a panel.

m) **Density**

The specific gravity of road marking thermoplastic materials shall between 1.0and 1.8.

n) **Consistency (Viscosity)**

Before any dilution, the thermoplastic material should give a minimum viscosityof 70.k u (0.7 pas).

o) **Durability (Degree of Erosion)**

When tested as prescribed in the standard being used, the total wear index for the test area on each marked trial line shall not exceed 35 at each regular inspection interval over a 12-month period.

226 FREQUENCY OF TESTING

In (i) (ii) (iii) and (iv) delete"T99" and substitute "T180" instead.

xi) Reclaimed Bituminous Materials

The properties of reclaimed bituminous materials shall be determined at thesame frequency as the constituent materials.

228 OUTLINE TESTING AND INSPECTION BY THE SUPERVISOR

The Supervisor will at regular intervals inspect and test materials and completed work for compliance with the specified requirements. Samples and lot sizes for routine testing shall be at the Supervisor's discretion.

All sections of completed work including all test results carried out by the Contractor, shall be submitted to the Supervisor for routine inspection and testing and the Contractor shall not cover up or construct any work on top of sections of completed work before written approval has been given by the Supervisor.

The Contractor shall arrange the submission of work for testing in such a manner that the Supervisor will have the opportunity to inspect and test the Works

SECTION 3 - SETTING OUT & TOLERANCES

301 SETTING OUT

a) Basic Survey

The basic survey provided by the Supervisor to the Contractor shall include:

(i) A traverse line which is referenced by steel pins in concrete locatedalongside the works, and

(ii) A computer printout of the geometric centerline whichwill enable theContractor to set out these lines.

	Any abortive setting out resulting from survey errors on the part of the Contractor, and any construction work carried out on the basis of such abortive setting out,
	be rectified entirely at the Contractor's expense.
	Detailed Setting Out
	Reference pegs shall be 50 mm x 50 mm in section, 600 mm long, driven 400 mm
	firmly into the ground and painted white above ground. The offset from the centreline shall be indicated by a small nail, 20 mm to 25 mm long, with its head
	driven flush with the top of the peg.
	Chainages, offset and reference elevation shall be clearly indicated on the side(s)the peg to the satisfaction of the Supervisor, This pin shall be co-ordinated and
	heightened and result of the same shall be provided to the Engineer for approval.
	Cost of these works shall be included in the rates as no separate item has been provided.
	All the main points of curves shall be referenced clear off the works on either side
	the centerline by pins in concrete class 20, All reference pegs shall be maintainedlong as they are required by the Supervisor to check the accuracy of the Works,
	After cutting of benches and prior to commencement of earthworks or sub-grade
	works, Contractor shall take cross-sections again and submit the copy of the same Engineer for agreement. These cross-sections shall then be used as basis of
	measurement for all subsequent layers, unless otherwise stated.
	Commencement of the works shall not be permitted until this basic survey databeen provided and approved by the Engineer for at least 5 Km of the road.

c) Grid System

The start and finish of geometric elements along the centerline of the horizontalalignment and intermediate points at regular intervals between these have beenidentified by coordinates which refer to UTM Grid System, The datum refers toSurvey of Kenya Beacons, The Contractor shall make himself fully conversantwith this system prior to commencement of any survey work.

302 TOLERANCES

a) Surface regularity

The tolerances below a straight edge for Base and Bituminous wearing coursegiven in Table 3-1 are amended from 6 mm to 4mm

b) Pavement Widths

The edges of the wearing course, base and sub-base shall nowhere lie closer to thecarriageway centreline than the dimensions shown on or calculated from the designdata given on the drawings or as amended by the Supervisor in writing to

the Contractor, and the half widths of wearing course, base and sub-base measuredat any point along the road shall not exceed the nominal width by more than 50 mm for wearing course, base and sub-base.

c) Drainage

The maximum deviation from the specified horizontal line of a pipe culvert shallbe 30 mm in 3 m and the vertical line 30 mm in 15 m. The Contractor shall correct any excess deviation before proceeding with the work.

The invert level of drainage ditches both lined and unlined shall be within +0 mm to-50 mm of that specified by the Supervisor and trimmed such that water does not pond. In the event of the Contractor over-excavating any lined or unlined drainage ditches or channels outside the specified tolerances, the Contractor will be held responsible for any additional work ordered by the Supervisor as being, inhis opinion, necessary to maintain acceptable invert grades. Such remedial work shall be carried out entirely at the Contractor's expense. Replacement of theover-excavated material within the ditches and channels will not be permitted, unless such material is compacted and that part of the channel is lined, all to the satisfaction of the Supervisor. The Contractor should be aware that the most likelyform of remedial work to be ordered by the Supervisor for unlined ditches would be the deepening of the remainder of the ditch or channel downstream of the over-excavated section for such length as the Supervisor deems necessary to avoid ponding, and, in his opinion, sufficient to adequately cope with the design flows.

SECTION 4- SITE CLEARANCE AND TOP SOIL STRIPPING

401 SITE CLEARANCE

Site Clearance shall be carried out as directed by the Engineer.

402 REMOVAL OF TOPSOIL

Topsoil shall include up to 200mm depth of any unsuitable material encounteredand shall be removed only in areas instructed by the Supervisor. Topsoil shall be removed to a depth as directed by the Supervisor and evenly spread within the road reserve, or stockpiled for top soiling of side slopes as directed by, and to thesatisfaction of the Supervisor.

403 REMOVAL OF STRUCTURES, FENCES AND OBSTRUCTIONS

When instructed by the Engineer, the Contractor shall demolish or remove anystructure and payment for this shall be made on day works basis.

SECTION 5 - EARTHWORKS

504 PREPARATION PRIOR TO FORMING EMBANKMENT

Where benching is required for existing pavement to accommodate earthworks sub-grade or sub-base for widening the road, the rate for compaction of existing ground shall be deemed to cover this activity.

Excavation in the pavement of the existing road shall be kept dry. In the event of water penetrating the underlying layer, construction of the subsequent layers shall be postponed until the underlying layers are dry enough to accommodate the construction plant without deforming or otherwise showing distress.

Step construction shall be carried out per layer at the joint where excavating both vertically and perpendicular to the direction of the travel. The step shall be 500mm perpendicular to the direction of the travel and 150mm vertical unless otherwise instructed by the Engineer.

Special care shall be taken when compacting the new material at the joint ensuring that specified density is achieved.

505 CONSTRUCTION OF EMBANKMENTS

Only material approved by the Engineer shall be used in embankments. Fillmaterial shall comply with the following requirements:

- Organic matter less than 5% by weight
- Swell less than 3%
- Plasticity Index less than 50%

Subgrade is defined on the Drawings, and subgrade material shall comply with the requirements of Clause 505 except that the CBR shall have a value of not lessthan 10% measured after a four (4) days soak on a laboratory mix compacted to adry density of 100% MDD (AASHTO T99).

Improved subgrade is defined on the Drawings or as shall be specified by theEngineer and shall comply requirements:

- CBR of not less than 14% measured after 4 days soak on a laboratory mixcompacted to a dry density of 95% (AASHTO T99)
- Plasticity Index less than 30%
- Swell less than 1% on the laboratory mix sample.
- Placed in layers not exceeding 175mm thick.

The improved subgrade thickness shall be as follows:

- Class S1 Native Subgrade (CBR 2-5%) : 325mm
- Class S2 Native Subgrade (CBR 5-10%) : 200mm

Improved subgrade shall not be required where the average bearing strength of the in-situ soil exceeds 10%.

508 COMPACTION OF EARTHWORKS

At pipe culverts, all fill above ground level around the culverts shall be compacted to density of 100% MDD (AASHTO T.99) up to the level of the top of the pipesor top of the surround(s), if any and for a width equal to the internal diameter of the pipe on either side of the pipe(s) or surround(s) as applicable.

At locations adjacent to structures, all fill above ground level up to the underside of the sub-grade shall be

compacted to density of 105% MDD (AASHTO T.99). In case of fill around box culverts this should be carried out for the full width of the fill and for a length bounded by the vertical plane passing through the ends of the wing walls.

Notwithstanding the provision of clause 503 of the Standard Specification, compaction of sub-grade material (i.e. material immediately below formation) in cut areas shall not be carried out by the Contractor in areas where the formation is formed in hard material, unless specific instructions to the contrary are issued by the Engineer.

Where improved sub-grade material shall be required, this shall be compacted and finished to the same standards and tolerances as those required for normal sub- grade and clauses in the specifications applying to normal sub-grade shall also apply.

511 BORROW PITS

The first part of the Standard Specification is amended as follows: -

Fill material which is required in addition to that provided by excavation shall be obtained from borrow pits to be located and provided by the Contractor but to the approval of the Engineer contrary to what has been stated.

517 MEASUREMENT AND PAYMENT

Notwithstanding the provisions of clause 517 of the standard specifications, therate for compaction of fill in soft material shall allow for the requirements of clause 508 of the special specification and no extra payment shall be made for compaction around pipe culverts (100% MDD AASHTO T.99).

SECTION 6 - QUARRIES, BORROW PITS, STOCKPILES AND SPOIL AREAS

601 GENERALS

Notwithstanding any indications to the contrary in the Standard Specification the Engineer will not make available to the Contractor any land for quarries, borrow pits, stockpiles and spoil areas, except for those areas in road reserves specifically approved by him.

The Contractor will be entirely responsible for locating suitable sources of materialscomplying with the Standard and Special Specifications, and for the procurement, wining, haulage to site of these materials and all costs involved therein. Similarly, the Contractor will be responsible for the provision and costs involved in providing suitable areas for stockpiling materials and spoil dumps. Should there be suitable sites for spoil dumps or stockpiles within the road reserve forming the site of the works the Contractor may utilise these subject to the approval of the Engineer.

No additional payment will be made to the Contractor to cover costs arising from the requirements for this Clause and the Contractor must include these costs in the rates inserted into the Bills of Quantities.

SECTION 7 - EXCAVATION AND FILLING FOR STRUCTURES

703 EXCAVATION OF FOUNDATIONS FOR STRUCTURES

Before commencing excavation for the foundation of any structure, the Contractor shall open up one or more trial pits within the areas of the foundation as directed by the Engineer's representative before excavating for the foundation. Where a trial pit is excavated to a level below the founding level of the structure, it shall be backfilled to that level with approved material or concrete as directed by the Engineer's representative.

Unless otherwise instructed by the Engineer, all excavated surfaces in material other than hard material, on which foundations for structures shall be placed, shall be compacted to 100% MDD (AASHTO T.99) immediately before structures are constructed.

Paragraph 4, last line: - Replace "95%" with "100%".

707 BACK-FILLING FOR STRUCTURES

Unless otherwise instructed by the Engineer, all backfilling material shall be compacted to a minimum of 100% MDD (AASHTO T.99).

709 EXCAVATIONS FOR RIVER TRAINING AND NEW WATER COURSES

Payments for river training and establishment of new water-courses shall only be made where such work constitute permanent works. Works done for road deviationor other temporary works shall not qualify for payment.

710 STONE PITCHING

Stone pitching will be undertaken as a soil conservation measure, with soil erosion minimised by ensuring that proper protection works are carried out along thedrains using stone pitching. Most of the sections shall be stone pitched especially areas where we have steep slopes to minimise undermining of the road by rain water or as may be instructed by the Engineer.

Stone pitching to drains, inlets and outlets of culverts to embankments and around structures shall consist of sound unweathered rock, which when soaked will withstand a crushing stress of $20N/mm^2$, and approved by the Engineer. The stone as dressed shall be roughly cubical in shape with minimum dimensionsof 150 x 150mm for normal thickness of stone pitching. Grouting will be done for all stone pitching areas and the top line of the stone pitching should be grouted/sealed with concrete class 15/20.

The surface to receive the pitching shall be compacted and trimmed to slope andthe stone laid, interlocked and rammed into the material to give an even finished surface.

In areas where stone pitching has been damaged, the Contractor shall identify such areas and notify the Engineer for his agreement of the extent of the Works required and his approval and instructions to proceed with the Works. Stone pitching repair and re-construction shall be carried out in accordance with Clause 710 of the Standard Specifications.

711 GABIONS

Where instructed by the Engineer the Contractor will install gabions as protectionworks to washout areas or bridge Piers and or Abutments. Gabions shall be constructed in accordance with Clause 711 of the Standard Specification.

In cases where existing gabions have been damaged, the Contractor shall identify them and notify the Engineer for his agreement of the extent of the Work required and his approval and instructions to proceed with the Works.

The Works shall involve removal of the damaged gabions / rocks, excavation to the correct levels and grades as directed by the Engineer, and in accordance with Clause 711 of the Standard Specifications and reconstruction with new gabionsand other necessary materials as necessary. The damaged gabions shall be recovered and transported to

the nearest KeRRA Engineer's Yard.

712 RIP-RAP PROTECTION WORK

Quarry waste or similar approved material shall be used to backfill scoured and eroded side, outfall and cut-off drain. The material shall be compacted to form aflat or curved surface preparatory to stone pitching of drainage channels, existing and new scour checks as directed by the Engineer.

The surface to receive the pitching shall be compacted and trimmed to slope andthe stone hand laid, interlocked and rammed into the material to give an even finished surface. The interstices of the Pitching shall be rammed with insitu material.The insitu material immediately behind the pitching shall be compacted to minimum density of 100% MDD compaction (AASHTO T.99)

714 BACKFILL BELOW STRUCTURES

Where instructed this shall be carried out in compliance with the requirements ofClause 507 and 804 of the Standard Specification.

SECTION 8 - CULVERTS AND DRAINAGE WORKS

801 SCOPE OF SECTION

The operations specified in this section apply to the installation of drainage worksand reinstatement and improvement of the same.

In addition, this Section covers: -

- Installation of 600mm, 900mm and 1200mm diameter pipe culverts
- Construction of associated inlet and outlet structures to specificationsand/or instructions

804 EXCAVATION FOR CULVERTS AND DRAINAGE WORKS

In the Standard Specifications, make the following amendments: -

a) In paragraph 6, line 3, and in paragraph 7, line 5 and in paragraph 11, line6, delete "95%" and insert "100%".

b) Removal of Existing Pipe Culverts

Where instructed by the Engineer, the Contractor shall excavate and removeall existing blocked or collapsed culvert pipes of 450mm, 600mm and 900mm diameter including concrete surround, bedding, inlet and outlet structure.

The void left after removal of culvert pipes shall be widened as necessary to accommodate new concrete bedding, pipe and haunching.
The payment of this work shall be per linear metre of pipes removed. The void left by removal of these pipes shall be carefully preserved in order to accommodate replacement 600mm or 900mm diameter pipe culverts as shall be directed by the Engineer.

(a) Removal of Other Existing Drainage Structures

When instructed by the Engineer, the Contractor shall demolish or remove any other structure and payment for this shall be made on day work basis.

(b) Excavation for Culverts and Drainage Works

The Contractor shall carry out all excavations for new culverts and drainageworks to the lines, levels, inclinations, and dimensions shown on the drawings or as instructed by the Engineer.

805 EXCAVATION IN HARD MATERIAL

In the Standard Specifications, Sub-clauses 805(a) and 805 (b) delete "95%" and insert "100%".

In sub-clause 809(a), paragraph 1, line 1, substitute "95%" with "100%".

In sub-clause 809(c), paragraph 2, line 4, between the words "compacted" and "and shaped" insert the words "to 100% MDD (AASHTO T.99)".

Hard material is material that can be excavated only after blasting with explosives or barring and wedging or the use of a mechanical breaker fitted with a rock point in good condition and operated correctly. Boulders of more than $0.2m^3$ occurring in soft material shall be classified as hard material.

809 BEDDING AND LAYING OF PIPE CULVERTS

Concrete pipes shall be laid on a 150mm thick concrete bed of class 15/20 and the pipes shall be bedded on 1:3 cement: sand mortar at least 50mm thick, 150mm wide and extending the full length of the barrel.

The rates inserted shall allow for compaction of the bottom of excavation to 100% MDD (AASHTO T.99).

810 JOINTING CONCRETE PIPES

The concrete pipes for the culverts shall have ogee joints and will be jointed by 1:2 cement: sand mortar and provided with fillets on the outside as described in clause 810 of the Standard Specification.

812 BACKFILLING OVER PIPE CULVERTS

In the Standard Specifications, clause 812

1). Delete paragraph 6 “for pipe culverts. depth of 150mm”, entirely.

2). Wherever the expression "dry density of 95% MDD (AASHTO T. 99)"occurs delete and replace with "dry density of 100% MDD (AASHTO T.99)".

The rates entered for laying of pipe culverts shall allow for backfilling to pipe culverts and compacting to 100% MDD (AASHTO T.99) and these works shall not be measured and paid for separately.

814.1 SUBSOIL DRAINS

In the event of excavation for repairs exposing local seepage, springs or unacceptably high water table, the Engineer may instruct the provision of counter fort or French drains.

These drains shall consist of a trench excavated to the alignment, width, depth and gradient instructed by the Engineer, and backfilled with approved compacted clean hard crushed rock material as specified in clause 815 of the standard specification. Where these drains lie within the carriageway the carriageway shall be reinstated with compacted stabilised gravel and surfaced with hot asphalt or a surface dressing as instructed by the Engineer.

814.2 FILTER FABRIC TO SUBSOIL DRAINS

A filter fabric shall be placed under, around and over rock fill of the subsoil drains. The provisions and placing of the fabric shall be in accordance with manufacturer’s instructions and complying with Clause 804 and 814 of the StandardSpecification. Payment shall be in metre square of the fabric used.

815 INVERT BLOCK DRAINS AND HALF ROUND CHANNELS

Invert Block Drains and Half Round Channels shall be constructed as shown in the drawings provided in accordance with the Standard Specifications where directedby the Engineer.

817 REPAIRS TO DRAINS

Cleaning and Repair of Existing Drains

In areas of existing side drains, mitre or outfall drains where such are blocked, the Engineer shall instruct the Contractor to clean and clear the drains to free flowing condition.

The work shall consist of:

(a) Stripping and removal of any extraneous material to spoil includingvegetation and roots in the drains to the satisfaction of the engineer.

(b) Spreading of any spoil to the satisfaction of the Engineer.

(c) Shaping the drains to free flowing condition as directed by the Engineer.

Measurement and Payment for cleaning drains shall be by linear metre of drain cleaned measured as the product of plan area and vertical depth of extraneous material instructed to be removed. No extra payment will be made for removal ofvegetation and roots.

Channels

The Engineer may instruct that the Contractor provides open channels in place of existing sub-drains where the latter may be damaged or in any other place. The rates entered by the Contractor in the bills of quantities must include for removal and disposal of any sub-drain material, excavation to line and level, backfilling and compaction as directed by the engineer. The channels shall be constructed of precast class 20/20 concrete of minimum 80mm thickness and lengths or widths not exceeding 1000mm. Joints shall be at least 15mm wide filled with 1:2 cement sand mortar.

Spoil Material

The Contractor shall be responsible for removal from site of all materials excavatedin the course of undertaking works in this section of the specification, unless suitable for re-use, and deposit of the material in a spoil dump to be approved by the Engineer.

818 SCOUR CHECKS

Scour checks are to be constructed in mass concrete in accordance with clause818 of the standard Specifications and the drawings as shall be provided.

819 CLEANING AND MAINTENANCE

De-silting of Pipe Culverts

Where instructed, the Contractor shall de-silt the existing pipe culverts by removing all the material from the pipe to make them clean and free flowing.

Measurement and payment shall be by the linear metres of pipes de-silted,regardless of diameter size.

821 CONCRETE GUTTERS AT BUS-BAYS

Where raised Kerbs are provided at bus-bays, openings shall be provided through the raised Kerbs to facilitate drainage as shown on the drawings or directed by the Engineer.

The opening shall be constructed through the bus-bay berm and embankment backslope behind the berm into the adjoining roadside ditch.

The opening shall be of 200 mm width other dimensions being left as they areshown on the drawings, or as instructed by the Engineer.

Measurements and payment for gutters at bus-bays shall be per linear metre, the rate being inclusive of the costs for setting out, excavation to line and level, trimming, compacting the invert trench, disposal of excavated surplus material, providing, transporting and laying, of concrete and the necessary formwork, backfilling, watering and compacting of the concrete as required.

SECTION 9 - PASSAGE OF TRAFFIC

901 SCOPE OF THE SECTION

The Contractor shall so arrange his work to ensure the safe passage of the Traffic at all times and if necessary construct and maintain an adequate diversion for traffic complete with all the necessary road traffic signs.

The Contractor shall provide to the satisfaction of the Engineer adequate warning signs, temporary restriction signs, advance warning signs, barriers, temporary bumps and any other device and personnel equipped with two way radios to ensure the safe passage of traffic through the works.

When carrying out the Works the Contractor shall have full regard for the safety of all road users.

The Contractor shall also provide sign posts and maintain to the satisfaction of the Engineer all deviations necessary to complete the works. The Contractor should allow for the costs of complying with the requirements of this clause in his rates.

The Contractor will be deemed to have inspected the site and satisfied himself as to the adequacy of his bid for these works and no additional payments will be made to the Contractor for any expenditure on traffic control or the provision of deviations. The Employer shall not be liable for inadequate prior investigations of this nature by the Contractor.

904 CONSTRUCTION OF DEVIATIONS

a) **General**

The existing level of public traffic is light and the contractor is expected to generally pass the public traffic through the works along lengths of the project road. But in circumstances where this is not practically feasible, the contractor will bring this to the attention of the Engineer, and ifdirected by the Engineer, the contractor will construct and maintain deviations in accordance with Section 9 of the Standard Specifications.

In addition to requirement of this clause, the maximum length of deviation road shall be restricted to 5kms at any given time unless otherwise instructed. The Contractor shall construct and complete deviations to the satisfaction of the Engineer before commencing any permanent work on the existing road. Also during these works the Contractor is supposed to provide a detour of adequate pipe culverts for pedestrian and traffic crossing where there is bridge works.

Contractor will be allowed to open further 5 km of the deviation road only when 80% of the permanent work has been completed on the first one and he will not be allowed to open any further5 km section till he has completed first 10 km of the road and has it opened to traffic. The sequencing of deviation road has been shown on the drawing.

Where the old road exists near the main road, Contractor shall use this road as deviation road.

b) **Geometry**

The carriageway width of the deviations shall not be less than 6m wide and suitable for 2-way lorry traffic unless otherwise specified.

c) **Construction**

Unless otherwise instructed gravel wearing course for the deviation shallbe 150 mm compacted thicknesses complying with section 10 of the Standard Specification. The Contractor shall allow in his rate for removal ofany unsuitable material before placing of gravel wearing course, as this willnot be paid for separately.

In addition to provision of this clause, Contractor is required to sprinkle water at least 4 times a day at the rate of1 to 1.4 litres/m^2/day at regular interval to minimise the effects of dust. Latest sprinkling time shall be one hour before the

sunset.

906 PASSAGE OF TRAFFIC THROUGH THE WORKS

The Contractor shall arrange for passage of traffic through the works during construction whenever it is not practicable to make deviations. The cost of doing so shall be deemed to have been included elsewhere in his rates and no separate payment shall be made for this. To this end, the Contractor shall be deemed to have inspected the site for himself and noted any locations where this may apply.

Any damage caused by passing traffic through the works shall be made good atthe Contractor's own cost.

907 SIGNS, BARRIERS AND LIGHTS

Contractor shall provide signs, barriers and lights as shown in the drawing in Book of Drawings at the locations where the traffic is being carried off the existing road to the deviation and back again to existing road. The Contractor

shall provide ramps and carry out any other measures as instructed by the Engineerto safely carry traffic from the road to deviation.

Contrary to what has been specified in this clause the road signs provided shall be fully reflectorized and in conformity with clause 9.1 of the "Manual for Traffic Signs in Kenya Part II".

909 ASSISTANCE TO PUBLIC

In addition to provision of clause 909, Contractor shall maintain close liaison with the relevant authorities to clear any broken down or accident vehicles from the deviations and the main road, in order to maintain smooth and safe flow of the traffic.

912 MEASUREMENT AND PAYMENT

(a) Passage of traffic through the works

Payment shall be made on Lump Sum basis.

(b) Construct Deviation

(i) Road Deviation

The Contractor shall be paid only 50% of the rate for this when he completes deviation road to the satisfaction of the Engineer. The balance shall be paid in equal monthly instalments over the contract period, as he satisfactorily maintains the deviation (as per clause 904 and 905 above) when it is in operation.

(ii) Deviation using Pipe Culverts

The Contractor shall be paid only 50% of the rate for this when he completes deviation to the satisfaction of the Engineer. The balance shall be paid in equal monthly instalments over the contract period, as he satisfactorily maintains the deviation whenit is in operation. The Contractor shall be paid full amount when the bridge under construction will be in use.

(c) Assistance to Public

The Contractor will be deemed to have included cost of this item in otheritems and no separate payment shall be made.

SECTION 11 – SHOULDERS TO PAVEMENT

1101 GENERAL

Shoulders shall be constructed as per the drawings or as directed by the Engineer.

1102 MATERIAL FOR CONSTRUCTION OF SHOULDERS

The shoulders shall be constructed as directed by the Engineer, in accordance with sections 11, 12, 14 and 15 of the Standard Specification. The material for shoulders shall be the same as that of base and sub-base layers in the carriageway.

1105 SURFACE TREATMENT OF SHOULDERS

The shoulders to the whole stretch of the road shall be as per the drawings or as directed by the Engineer.

1106 MEASUREMENT AND PAYMENT

Payment for shoulder construction shall be in accordance with the relevant clauses in sections 11, 12, 14, and 15 of the relevant Specifications. Payment for fill material on shoulder shall be in accordance with Section 5 of this specification.

SECTION 12 - NATURAL MATERIAL SUB-BASE AND BASE

1201 GENERAL

(a) Definitions

The term "natural material" includes lateritic gravel, quartzitic gravel, calcareous gravel, soft stone, coral rag, conglomerate, sand or clayey sand, a combination of any of these materials or a mixture of natural gravel and upto30% of stone (crushed or not). A natural material is also referred to as "gravel".

(b) Sources of materials

Natural material for subbase and base may be obtained from any of thefollowing sources: -

(i) Borrow pits
(ii) Spoil areas
(iii) Excavation in cuttings, widened if necessary.

In all cases the Engineer will instruct the Contractor as to the source ofmaterial to be used and the location in which it is to be placed.

(c) Inspection of site

Where a source of material is available for inspection during the Tender
Period the Contractor shall satisfy himself as to the nature and amount of workinvolved particularly in respect of the volume of overburden, the quality and hardness of material, the degree of selection necessary, the method of extraction, and access to the source.

(d) Borrow pits

The Contractor shall comply with all the requirements of Section 6 of thisSpecification in respect of borrow pits.

1202 CLASSIFICATION OF MATERIAL

Natural material shall be material which can be extracted from a borrow area or aroad cutting by ripping to a depth of 300 mm with a single tine hydraulic ripper acceptable to the Engineer drawn by a track type crawler tractor in good order complete with all equipment and accessories as supplied and rated at 300 BHP flywheel power and over with an operating weight of not less than 37.2 tonne and being operated in accordance with the manufacturer's recommendations.
The material may require the use of either a grid or sheep foot roller with more than8000 kg mass per metre width of roll to break it down and/or screening to achieve thespecified grading.

1203 MATERIAL REQUIREMENTS

(a) Gravel with Minimum Soaked CBR Value of 25% (G25)

Material for G25 subbase shall include natural gravel or a mixture of natural gravel and up to 30% of sand or crushed stone aggregates and shall conform to the following requirements:

- Maximum size : 63mm
- Passing 0.075mm sieve : Maximum 35%
- Plasticity Index : Maximum 15%
- CBR (4 days' soak) : Minimum 25%

(b) Gravel with Minimum Soaked CBR Value of 30% (G30)

Material for G30 subbase shall include natural gravel or a mixture of natural gravel and up to 30 percent of sand or crushed stone aggregates and shall conform to the specifications given in Section 1203(a) of the Standard Specifications for Road and Bridge Construction but with maximum PI of 12%.

The material shall comply to the following grading envelope after compaction:

BS Sieve size (mm)	Percentage by weight passing
63	100
37.5	80-100
20	60-100
5	30-100
1.18	17-75
0.3	9-50
0.075	5-25

(c) Gravel with Minimum Soaked CBR Value of 50% (G50)

Material for G50 base shall include natural gravel or a mixture of natural gravel and up to 30% of sand or crushed stone aggregates and shall conform to the following requirements:

(a) Maximum size : 50mm
(b) Passing 0.075mm sieve : 4 - 20%
(c) Plasticity Index : Maximum 12%
(d) Plasticity Modulus : Maximum 250
(e) LAA : Maximum 70%
(f) CBR (4 days' soak) : Minimum 50%

The material shall conform to the following grading envelope after compaction:

BS Sieve size (mm)	Percentage by weight passing
50	100
37.5	95 - 100
28	80-100
20	60 - 100
10	35-90
5	20-75

2	12-50
1	10-40
0.425	7-33
0.075	4-20

(g) Gravel with Minimum Soaked CBR Value of 60% (G60)

Material for G80 base shall include natural gravel or a mixture of natural gravel and up to 80% of sand or crushed stone aggregates and shall conform to the following requirements:

- Maximum size : 50mm
- Passing 0.075mm sieve : 4 - 20%
- Plasticity Index : Maximum 10%
- Plasticity Modulus : Maximum 250
- LAA : Maximum 70%
- CBR (4 days soak) : Minimum 60%

The material shall conform to the following grading envelope after compaction:

BS Sieve size (mm)	Percentage by weight passing
50	100
37.5	95 - 100
28	80-100
20	60 - 100
10	35-90
5	20-75
2	12-50
1	10-40
0.425	7-33
0.075	4-20

(h) Gravel with Minimum Soaked CBR Value of 80% (G80)

Material for G80 base shall include natural gravel or a mixture of natural gravel and up to 80% of sand or crushed stone aggregates and shall conform to the following requirements:

- Maximum size : 50mm
- Passing 0.075mm sieve : 4 - 20%
- Plasticity Index : Maximum 10%
- Plasticity Modulus : Maximum 250
- LAA : Maximum 50%
- CBR (4 days soak) : Minimum 80%

The material shall conform to the following grading envelope after compaction:

BS Sieve size (mm)	Percentage by weight passing
50	100

37.5	95 - 100
28	80-100
20	60 - 100
10	35-90
5	20-75
2	12-50
1	10-40
0.425	7-33
0.075	4-20

(i) Material for Cement/Lime Improved Gravel of CBR 60% (CIG 60)

Material for CIG 60 base shall include natural gravel or a mixture of natural gravel and up to 30 percent of sand or crushed stone aggregates and shall conform to the following requirements:

- Maximum size : 50mm
- Passing 0.075mm sieve : 5-35%
- Plasticity Index : Maximum 20%
- CBR (4 days' soak) : Minimum 25%

After treatment the material shall have a CBR of at least 60% measured after 7 days' cure and 7-day soak on the site mix compacted to at least 95% MDD AASHTO T180 and the treated material shall have a plasticity index less than 8% and a plasticity modulus less than 250.

(j) Material for Cement/Lime Improved Gravel of CBR 100% (CIG 100)

Material for CIG 100 base shall include natural gravel or a mixture of natural graveland up to 30 percent of sand or crushed stone aggregates and shall conform to the following requirements:

- Maximum size : 50mm
- Passing 0.075mm sieve : 5-35%
- Plasticity Index : Maximum 20%
- CBR (4 days' soak) : Minimum 25%

After treatment the material shall have a CBR of at least 100% measured after 7 days cure and 7 days soak on the site mix compacted to at least 95% MDD AASHTO T180 and the treated material shall have a plasticity index less than 6% and a plasticity modulus less than 250.

(k) Material for Cement/Lime Improved Gravel of CBR 160% (CIG 160)

Material for CIG 160 base shall include natural gravel or a mixture of natural gravel and up to 30 percent of sand or crushed stone aggregates and shall conform to the requirements given in Section 1203(d) of the Standard Specifications for Road and Bridge Construction but shall have Plasticity Index not exceeding 20%- and 4-day soak CBR of at least 25%.

SECTION 13-GRADED CRUSHED/ HAND PACKED STONE SUBBASE AND BASE

GRADED CRUSHED STONE

1301 The material for graded crushed stone shall comply with the requirements of stone Class C for 0/40 mm

1303 MATERIAL REQUIREMENTS

(a) Properties

Graded Crushed Stone for base and sub-base shall conform to the specifications given in Section 13 of the Standard Specifications and shall be stone Class c in accordance with Clause 1303(b) of the standard specification.

(b) Grading

The Nominal size of the base and subbase material shall be 0/40 mm in accordance with clause 1303 (c) of the standard specifications

1306 LAYING AND COMPACTING GRADED CRUSHED BASE-COURSE

Laying of the GCS shall be by self propelled paver approved by the Engineer

1309 TREATED MATERIALS

Contrary to the provisions of the Standard Specifications, mixing of GCS and

cement shall be by a continuos pug-mxer approvrd by the engineer

1310 MEASUREMENT AND PAYMENT

Contrary to the Standfard Specifications, the rate inserted for the GCS and Cement shall allow for winning, mixing, watering, laying by paver and compaction as required or called for in the Standard Specifications or as directed by the Engineer

1311 HAND PACKED STONE

Hand packed stone base is a layer of hand laid stone of defined size and durable in nature, laid in a manner such that when proof rolled and compacted it forms a stable and dense matrix as a road base.

a) Material for Hand Packed Stone Base

This shall consist of durable stone with nominal base dimensions of 75 mm square and minimum height of 150 mm or when compacted to give a layer of 150 mm. The stone shall be class C with the following requirements:

LAA	45 max
ACV	32 max
SSS	12 max
FI	30 max
CR	60 min.

It shall be free from foreign matter. The fines passing 0.425 mm sieve shall be NONPLASTIC

b) Laying

The stone shall be laid by hand closely together. The stone shall be carefully bedded and tightly wedged with suitable spalls. The base of the stone shall alternate with the apex in all directions or as directed by the Engineer. The layer shall be proof rolled with a loaded scrapper or truck with a minimum axle load of 8 tonnes in the presence of the Engineer who shall approve of its stability before compaction.

c) Compaction

This shall be by a steel wheeled roller of at least five tonnes per metre width of roll. It shall consist of four static runs or until there is no movement under the roller. There shall follow vibratory compaction until an average dry density of 85% minimum of specific gravity of stone has been achieved. No result shall be below 82% of specific gravity. The surface of the compacted layer shall then be levelled by quarry dust (0/6 mm). The dust shall have the following

specifications:

The stone shall be class C
Grading

Sieve Size	% Passing
10	100
6.3	90-100
4	75-95
2	50-70
1	33-50
0.425	20-33
0.300	16-28
0.150	10-20
0.075	6-12

The dust shall be free from foreign matter and fines passing 0.425 mm sieve shall be NON-PLASTIC. The maximum layer shall be 40 mm or as directed by the Engineer

d) Measurement and Payment

Payment shall be by the cubic metre laid (m^3). Measurement of volume shall be determined as the product of length and compacted thickness laid. The rate quoted for this item should include the cost for laying the levelling quarry dust layer, as no extra payment shall be made for this layer.

SECTION 14-CEMENT AND LIME TREATED MATERIALS

1403 CEMENT TREATMENT

a) Cement

In variation to this Sub-Clause, cement for improvement shall be ORDINARY PORTLAND CEMENT (OPC) complying with KS 1725:
2001 CEM I 42.5 N or equivalent, subject to the Engineer's approval. Thecement content of the stabilised material shall be as indicated by the Engineer and will normally be about 4%. The Engineer shall exercise hisdiscretion to any variation in the rate of application of the cement, whichhe may see fit to order from time to time.

b) Moisture content

The moisture content of the stabilised material shall be as directed by theEngineer but nevertheless within the range of 85% to 105% of the Optimum Moisture Content (AASHTO T180).

c) Mixing and Placing

The material to be stabilised and the cement shall be mixed by an approvedmixing plant which will either be a mix-in-place pulvimixer or a stationarymixing plant for material to be used for pavement construction, widening and shoulders.

LIME TREATMENT

Lime treatment will be as outlined in the Standard Specifications for road and bridge construction. The lime content of the stabilised material shall be as indicatedby the Engineer and will normally be about 2-4%.

1409 PROTECTION AND CURING

Protection and curing shall be carried out in accordance with the provisions of Clause 1409(i) of the Standard Specification but provision shall be made to wet the surface from time to time as directed by the Engineer.

1410 TRAFFIC

Traffic across the works will be restricted as outlined in the Standard Specifications.

1412 MEASUREMENT AND PAYMENT

Improvement Agent: the provision of the improvement agent shall be measured by the tonne calculated as the specific weight of agent added to the material.

Mix-in improvement Agent: Mixing improvement agent into the material shall be measured by the cubic metre of treated material calculated as the product of the compacted sectional area treated and the length.

The Contractor may be required to carry out research on different soils stabilizingagents. Rates in relevant bills of quantities to apply.

SECTION 14 A- LEAN CONCRETE AND PAVING BLOCKS

14A/09 CONCRETE PAVING BLOCKS

Concrete paving blocks shall be those meeting the requirements of Section 20 of the Standard Specifications. Where required for carriageway and shoulders wearing courses, the thickness shall be 80mm, while for walkways the thickness shall be 50mm.

The paving blocks shall be laid on a primed base course layer meeting the requirements of Section 12 and 14 of the Standard Specifications. The primer shall be MC 30, meeting the requirements of section 15 of the Standard Specifications.

Edge restraints shall be constructed using road kerbs and flush kerbs meeting the specifications requirements of Section 20 of the Standard Specifications before laying of the paving blocks. The road kerbs and flush kerbs edge restraints shall be constructed with 10mm drainage joints for the paved carriageway and shoulders.

A laying layer of 30 mm thick sand/quarry dust shall be provided uniformly across the surface to receive the paving blocks. The blocks shall then be hand laid in position and vibrated using a plate compactor with spefications approved by the Engineer.

SECTION 15 - BITUMINOUS SURFACE TREATMENTS

PART A - GENERAL

1501A GENERAL

Details of the spray rates for bitumen and the spread rates for chippings will be directed by the Engineer but the under listed is anticipated and can be used for guidance purpose i.e;

a) Chippings

-14/20mm size pre-coated chippings at a spread rate of 60-90 square meters percubic meter.

-10/14mm size pre-coated chippings at a spread rate of 80-120square meters percubic meter.

-6/10mm size pre-coated chippings at spread rate of 80-120 square meters per meter.

b) Bitumen Spray Rates

cubic

- 1.0 – 1.4 l/$m^2$for the first seal
- 0.6 - 1.0 l/$m^2$for the second seal.

The Average Least Dimension (ALD) shall be determined in the field after crushingthe rock for chippings and then determine the actual spray rates and chipping spread rates

PART B - PRIME COAT AND TACK COAT

1502B MATERIALS FOR PRIME COAT AND TACK COAT.

For prime coat, the binder shall be a medium-curing cutback MC 30 unlessotherwise directed by the Engineer.

The rate of spray of bituminous prime coat refers to the gross volume of thecutback bitumen, that is to say the volume of the bitumen plus dilutants.

Prime coat shall be applied to gravel areas that are to receive double seal surfacedressing or bituminous mixes as directed by the Engineer.

The tack coat shall consist of bitumen emulsion KI-60 unless otherwise directedby the Engineer.

The rates of spray of the binder shall be as instructed by the Engineer and shall generally be within the range 0.8-1.2 litres/square metre.

1503B PREPARATION OF SURFACE

In addition to requirements of Clause 1503B of the Standard Specifications, the Contractor shall prepare and repair cracks, edges, potholes and other failures as follows: -

- Where instructed, the Contractor shall prepare areas for the repair of potholes, road edges and other repair areas by excavating off unsuitable or failed materialand debris, trimming off excavated edges, cleaning and compacting the resulting surfaces and applying MC 30 cut-back bitumen prime coat and bitumen emulsion KI-60 tack coat, all as directed by the Engineer. Measurement and payment shall be made under the relevant item of Bill No 15.

- Where the surface repair on potholes and edges are to be carried out, Asphalt Concrete Type I (0/14 gradation) shall be used. Bituminous material for repair of failures and other repair areas shall be paid for under the relevant item of Bill No 16

PART C – SURFACE DRESSING

1502C MATERIALS FOR SURFACE DRESSING

Binder

The bituminous binder shall be 80/100 penetration grade bitumen cut-back with kerosene fuel in accordance with prevailing road temperatures, and conforming to Clause 211 of the Standard Specification.

Chippings

Chippings shall be of class 1 material and shall comply in all respects with Clause 1502C of the Standard Specification. The Contractor's attention is drawn to the requirements of Clause 1501C of the Standard Specification with regard to cleanliness and dust content of chippings for surface dressing. Should it prove necessary in the Engineer's opinion to wash chippings, no extra payment will be made to the Contractor for this operation.

1503C SPRAY AND SPREAD RATES OF BITUMEN AND CHIPPINGS.

Spray and Spread Rates for bitumen and chippings cannot be calculated until samples of the chippings to be used are available for test.

After submission of samples and completion of laboratory tests on chippings and binder, the Contractor shall in the presence of the Engineer and the Chief Materials Engineer or representatives, lay trial sections of seal at various rates of spray and spread as directed by the Engineer and in accordance with clause 1503C of the Standard Specification.

Should any change occur in nature of source of chippings or bitumen, the Contractorshall advice the Engineer accordingly who will then decide if any revisions are required to the spray and spread rates.

If any changes are required, the Contractor shall carry out further trials as instructedby the Engineer.

Payment for binder and chippings will be based on the instructed spray and spread rates used which may not necessarily be those specified. The Engineer will specify the spray rates of bitumen as residual bitumen per square meter. Actual spray rates used by the Contractor must be adjusted to compensate for any cutter added.

1505C PRE-COATED CHIPPINGS

Chippings utilized for surface dressing works under this contract shall be pre- coated in accordance with clause 1505C of the Standard Specification. The binder used for pre-coating chippings shall be MC 30 cut-back bitumen.

The amount of bituminous binder used to pre-coat chippings will be as instructed by the Engineer and will normally be between 0.4% and 1.0% residual bitumen as percentage of the total dry weight.

Prior to laying any pre-coated chippings the Contractor shall prepare trial mixesof bitumen and chippings in the presence of the Engineer. After completion of trial mixes, the Engineer shall issue written instructions to the Contractor indicating the amount of binder to be added in pre-coated chippings. The Contractor shall maintain this proportion unless the surface or nature of the chippings changes when the Contractor shall repeat the trials and the Engineer will issue revised instruction.

1511C MEASUREMENT AND PAYMENT

(a) Seal coat

Seal coats shall be measured by the litre, for each type of bituminous binder for each seal coat, calculated as the product of the area in square metres sprayed and the rate of application in litres/square metres, corrected to 15.6 º C.

(b) Chippings

Chippings shall be measured by the cubic metre of each nominal size for each class calculated as the product of the area in square metres covered and the reciprocal of the instructed rate of application in square metres/cubic metre or the actual rate of application in square metres/cubic metre whichever calculation gives the lower volume.

SECTION 16 – BITUMINOUS MIX BASES, BINDER COURSES ANDWEARING COURSES

PART B: ASPHALT CONCRETE FOR SURFACING

1601B Asphaltic Concrete Type II shall be used and shall meet all the requirements of the relevant Clauses of both Standard Specifications for Roads and Bridges construction of Ministry of Transport and Communication and the current (August 1987) Ministry of Roads and Public Works Road Design Manual Part III. Where the requirements of the two differ, those of Standard Specifications for Roads and Bridges shall prevail.

The material requirements will be as follows:

a) Bitumen shall be *80/100* penetration grade

b) Aggregates:
Stone Class bGrading 0/14

c) Mineral filler - as per Clause 1602B (c)

Introduce the following amendments to Section 16 of Standard Specifications:

-1602B(b) - the aggregate for asphalt concrete Type I shall comply with therequirementsfor coarse aggregates class b as specified in clause 1602B(b) ofstandardspecifications

- 1602B(c) - the grading for aggregate for binder course shall conform to therequirementsfor Type I binder course asphalt concrete as given in table 16B-l

- 1604B - the requirements for asphalt concrete shall conform to the specificationsfor Type I Binder course as given in clause 1604(B) of StandardSpecifications table 16B-2

-1607B(b) Variation in binder content - there shall be no extra payment forvariation of binder content from the that specified in the design mix.

SECTION 17 - CONCRETE WORKS

1703 MATERIALS FOR CONCRETE

This work shall consist of placing selected approved material of 250mm minimum diameter on the foundation put after excavation to receive levelling concrete in accordance with these specifications and in conformity with the lines, grades and cross sections shown on the Drawings as directed by the Engineer.

(a) Materials

Selected rock: The selected rock boulders to be placed for this work shall be hard, sound, durable quarry stones as approved by the Engineer. Samplesof the stone to be used shall be submitted to and approved by the Engineer before any stone is placed.

The maximum size of the stone boulders shall be 300mm.

(b) Construction Method

After completion of the structural excavation the surface of the loose soil shall be levelled and compacted. Then the stone of the above sizes shall be placed in one layer of 250mm over the compacted bed where the bottom slab will rest. Coarse sand shall be spread to fill up the voids in the stone boulders, and compaction with vibratory compactors should be performed to make this layer dense whereon a concrete of levelling course shall be placed.

(c) Measurement and payment

Measurement for the bedding materials shall be made in cubic metres for the completed and accepted work, measured from the dimension shown on the Drawings, unless otherwise directed by the Engineer.

Payment for the bedding Materials for Levelling Concrete Works shall be full compensation for furnishing and placing all materials, all labour equipment, tools and all other items necessary for proper completion of the work in accordance with the Drawings and specifications and as directedby the Engineer.

1703(A) LEVELLING CONCRETE (CLASS 15/20) FOR BOTTOM SLABINCLUSIVE OF COST OF FORM WORKS

This work shall consist of placing and levelling lean concrete class 15/20 over the prepared bed of stone boulders in the foundation for bottom slab and wing walls in accordance with these specifications and which conformity with the lines, grades, thickness and typical cross-sections shown on the drawings unless otherwise directed by the Engineer.

(a) Materials for Levelling Concrete

Requirement for the concrete class 15/20 is specified as follows: - Design compressive strength (28) days : 15N/mm^{2}Maximum size of coarse aggregate : 20mm
Maximum cement content : 300 kg/m^3.Maximum water/cement ration of 50% with slump of 80mm.

(b) Construction Method

The bed of stone boulders upon which the levelling concrete will be placed shall be smooth, compacted and

true to the grades and cross-section shall be set to the required lines and grades.

(c) Measurement and payment

Measurement for levelling concrete (class 15/20) shall be made in cubic metres completed and accepted levelling concrete work measured in place which is done in accordance with the Drawings and the Specifications.

Payment for this work shall be the full compensation for furnishing and placingall materials, labour, equipment and tools, and other incidentals to Specifications and as directed by the Engineer.

Pay item No. 17/02 Levelling Concrete Works (Class 15/20) for Box Culvert and wing walls inclusive of Cost of Form works.

1703(B) REINFORCING BARS OF WALLS AND SLABS

This work shall consist of furnishing, fabricating and placing in the concrete of the bottom slab, top slab, median wall, sidewalls, wing walls and aprons, reinforcing bars of the quality, type and size in accordance with these specifications in conformity with the requirements shown on the Drawings.

(a) Material:

Reinforcing bars shall be deformed and shall meet the requirements of British standard BS4461, unless otherwise called for the drawings or approved by the Engineer.

No reinforcing bar shall be delivered without a certificate guaranteeing the yield stress. The reinforcing bars shall be kept off the ground, free from dirt, oil, grease, or avoidable rust and stored within a building or provided with suitable covers.

If it is necessary for the Engineer to ascertain the quality of the reinforcing bars, the Contractor shall test the reinforcing bars, at his own expense, by means as directed by the Engineer.

(b) Construction Method

(i) Bar Bending Schedule:

The Engineer shall provide the Contractor with bending schedule showing the location types, sizes, bending dimensions and cut lengths of the reinforcing bar required to be fixed in the works.

(ii) Cutting and Bending:

Qualified personnel shall be employed for the cutting and bending, and proper application shall be provided for such work.

Bars shall be cut and bent cold to the dimensions indicated and with equipment and methods approved by the Engineer.

Stirrups and tie bars shall be bent around a pin having a diameter not less than 15 times the minimum diameter of the bar. Bends of other bars, where full tension in the bar may occur, shall be made around a pin having a diameter not less than 7.5 times the bar diameter as shown on the Drawings.

Reinforcing bars shall be accurately formed to the shapes and dimensions indicated on the Drawings, and shall be fabricated in a manner that will not injure the materials.

(c) Placing

Reinforcing bars shall be accurately placed in proper position, and so that they be firmly held during placing of concrete.

Bars shall be tied at all intersections by using annealed iron wire 0.9mm or larger diameter, or suitable clips.

Distances from the forms shall be maintained, corrected by means of metal hangers, metal blocks, metal supports or other supports approved by the Engineer.

The Engineer shall inspect reinforcing bars after placing. When a long time has elapsed after placing reinforcing bars, they shall be cleaned and inspected again by the Engineer before placing concrete.

(d) Splicing and Joint

When it is necessary to splice reinforcing bars at points, position and methods of splicing shall be determined based on strength calculations and approved by the Engineer.

In lapped splices, the bars shall be lapped by the required length, and wired together at several points by using annealed iron wire larger than 0.9mm.

Exposed reinforcing bars intended for bonding with future extensions shall be effectively protected from injury and corrosion.

Oxyacetylene welding joint of reinforcing steel shall be done only if authorised by the Engineer in writing.

(e) Measurement and Payment

Bending and installation of reinforcing bar of piers and abutments shall be measured in terms of tons. The length of steel bar of each size will be shown on the drawings in which the bar length for splicing is excluded. In computing the weight to be measured, the theoretical weights of bars of the cross-section shown on the Drawings or authorised shall be used.

These weights are given in the following table: -

Bar type and the Cross-sectionin millimetres	**Weight of Bar in Kilogramme - per 12m length of bar**
Y10	7.40
Y12	10.66
Y16	18.95
Y20	29.60
Y25	46.30

1703 (C) FORMWORK FOR CULVERT WALLS AND SLABS

This work shall consist of all temporary moulds for forming the concrete for culvert walls and slabs together with all temporary construction required for their support. Unless otherwise directed by the Engineer all formworks shall be removedon completion of the walls and slabs.

(a)Materials

Forms shall be made of wood or metal and shall conform to the shape, lines and dimensions shown on the Drawings.

All timber shall be free from holes, loose material, knots, cracks, splits and warps or other defects affecting the strength or appearance of the finished structure.

Release Agents – Release agents shall be either neat oils containing a surface activating agent, cream emulsions, or chemical agents to be approved by the Engineer.

(b) Construction Method

i. Formworks

Formworks shall be designed to carry the maximum loads which may be imposed, and so be rigidly constructed as to prevent deformation due to load, drying and wetting, vibration and other causes. After forms have been set in correct location, they shall be inspected and approved by the Engineer before the concrete is placed.

If requested, the Contractor shall submit to the Engineer working drawings of the forms and also, if requested, calculations to certify the rigidity of the forms.

Unless otherwise described in the Contract, all form joints for exposed surfaces of concrete shall form a regular pattern with horizontal and vertical lines continuous throughout each structure and all construction joints shall coincide with these horizontal and vertical lines. PVC pipes of 50mm diameter for weep holes shall be arranged asshown on the Drawings.

Unless otherwise specified, formwork shall be designed to form chamfers at all external corners whether or not such chamfers are shown on the Drawings to prevent cracks and other damage from arising.

The inside surface of forms shall be cleaned and coated with a releasingagent to prevent adhesion of the concrete. Release agents shall be applied strictly in accordance with the manufacturer's detailed instructions. The release agent shall be applied to the formwork prior to erection. Release agent must not come into contact with reinforcement. Immediately before concrete is placed, the forms shall be thoroughly cleaned and freed from sawdust, shavings, dust, mud or other debris by hosing with water. Temporary openings shall be provided in the forms to drain away the water and rubbish.

ii. Scaffolding

All scaffolding required to support the forms shall be designed and constructed to provide necessary rigidity and support the loads without appreciable deflection or deformation.

Details, plans and structural and flexural calculations for scaffolding shall be submitted to the Engineer for approval, but in no case shall the Contractor be relieved of his responsibility for the results obtained by use of these plans, etc.

iii. Removal of formwork

The time at which the formwork is truck shall be the Contractor's responsibility and the forms shall not be removed until the concrete strength has reached 20 N/mm^2.

iv. Measurement and Payment

Formwork shall be measured as the net area, in square metres, in contact with the finished concrete surface of the walls and slabs. No measurement shall be allowed for formwork of temporary construction joints.

Payment for the Formworks shall be full compensation for furnishing, erecting, jointing all the forms for the concrete including furnishing and applying release agent, and construction of the required scaffoldingto support the forms, all conforming to the shape, lines, grade and dimensions of the structure as shown on the Drawings, all in accordance with the Drawings and as directed by the Engineer.

1703(D) CONCRETE WORKS (CLASS 25/20)

This work shall consist of furnishing, mixing, delivering and placing of the concretefor the construction of culvert walls and slabs, in accordance with these Specifications and in conformity with the requirements shown on the Drawings.

Concrete class 25/20 shall be used for culvert wingwalls and slabs. The requirements of Concrete class 25/20 are provided as follows unless otherwise the Engineer will designate any alteration.

Design compressive strength (28 days): 25N/mm^2
Maximum size of coarse aggregates : 20mmMaximum water/cement ratio of 45% with slump of 80mm

a) Concrete Materials

1. Cement:

Cement shall be of Ordinary Portland type and shall conform to therequirements of BS 12 or equivalent.

The Contractor shall select only one type or brand of cement or others. Changing of type or brand of cement will not be permitted without a new mix design approved by the Engineer. All cement is subject to the Engineer's approval, however, approval of cement by the Engineer shall not relieve the Contractor of the

responsibility to furnish concrete of the specified compressive strength.

Conveyance of cement by jute bags shall not be permitted. Storage in the Contractor's silo or storehouse shall not exceed more than two (2) months, and age of cement after manufacture at mill shall not exceed more than four months. The Contractor shall submit to the Engineer for his approval the result of quality certificate done prepared by the manufacturer.

Whenever it is found out that cement has been stored too long, moist, or caked, the cement shall be rejected and removed from the project.

2. Aggregates

Fine and coarse aggregates must be clean, hard, strong and durable, and free from absorbed chemicals, clay coating, or materials in amounts that could affect hydration, bonding, strength and durability of concrete.

Grading of aggregates shall conform to the following requirements:

a) Grading of Fine Aggregates

Sieve Size	Percentage by Weight Passing
10 mm	100
6.3mm	89-100
2.5 mm	60-100
1.2 mm	30-100
0.6 mm	15- 54
0.3 mm	5- 40
0.15 mm	0 - 15

Grading of Coarse Aggregates

Size of Coarse Aggregate	40	30	25	20	15	10	5	2.5
Amounts finer than each standard sieve percentageby weight	100	-	-	90-100	-	30-69	0-10	

c) Other requirements for aggregates are as follows:

i. Fine Aggregates

Fitness Modulus, AASHTO M-6 : 2.3 – 3.1
Sodium Sulphate Soundness, AASHTO T104 : Max. 10% loss
Content of Friable Particles AASHTO 112 : Max 1% by weight
Sand Equivalent, AASHTO T176 : Min. 75

ii. Coarse Aggregate

Abrasion, AASGTO T96 : Max. 405 loss
Soft Fragment and shale, AASHTO M80 : Max. 5% by weight
Thin and elongated Pieces, AASHTO M80 : Max. 15%

3. Water

All sources of water to be used with cement shall be approved by the Engineer. Water shall befree from injurious quantities of oil, alkali, vegetable matter and salt as determined by the Engineer.

4. Admixture

Only admixture, which have been tested and approved in the site laboratory through trial mixingfor design proportion shall be used.

Before selection of admixture, the Contractor shall submit to the Engineer the specific informationor guarantees prepared by the admixture supplier.

The Contractor shall not exclude the admixture from concrete proportions.

b) Proportioning Concrete

The Contractor shall consult with the Engineer as to mix proportions at least thirty (30) days prior to beginning the concrete work.

The actual mix proportions of cement, aggregates, water and admixture shall be determined by the Contractorunder supervision of the Engineer in the site laboratory.

The Contractor shall prepare the design proportions which has 120% of the strength requirementspecified for the designated class of concrete.

No class of concrete shall be prepared or placed until its job-mix proportions have been approvedby the Engineer.

c) Concrete Work

(i) Batching shall be done by weight with accuracy of: Cement : ½percent

Aggregate : ½ percent

Water and Admixture : 1 percent.

(ii) Equipment should be capable of measuring quantities within these tolerances for thesmartest batch regularly used, as well as for larger batches.

The accuracy of batching equipment should be checked every month in the presence of theEngineer and adjusted when necessary.

(iii) Mixing and delivery

Slump of mixed concrete shall be checked and approved at an accuracy of +25mm againstdesignated slump in these specifications.

(iv) Concrete in hot weather

No concrete shall be placed when the ambient air temperature is expected to exceed thirty-three degrees celsius (33^0c) during placement operations.

(v) Concreting at night

No concrete shall be mixed, placed or finished when natural light is insufficient, unless an adequate approved artificial lighting system is operated, such night work is subject to approval by the engineer.

(vi) Placing

In preparation of the placing of concrete, the interior space of forms shall be cleaned and approved by the Engineer prior to placing concrete. All temporary members except tie bars to support forms shall be removed entirely from the forms and not buried in the concrete. The use

of open and vertical chute shall not be permitted unless otherwise directed by theengineer.

The Contractor shall provide a sufficient number of vibrators to properly compact each batchimmediately after it is placed in the forms.

d) Measurement and Payment

Measurements for the Concrete Works Class 25/20 of culvert walls and slabs shall be made in cubic metres for the walls and slabs actually constructed, measured from their dimensions shown on the Drawings. Payment

for the Concrete Works (Class 25/20) of culvert walls and slabs shall be the full compensation for furnishing all materials of the concrete mixing, delivering, placing and curing the concrete, equipment and tools, labour and other incidental necessary for the completion of the work in accordance with the Drawings and these Specifications and as directed by the Engineer.

SECTION 20 - ROAD FURNITURE

2001 ROAD RESERVE BOUNDARY POSTS

Road reserve boundary posts shall be provided as directed by the Engineer and in compliance with Standard Specification clause 2001. They shall be placed at 50m intervals along the boundary of the road reserve.

2003	**EDGE MARKER POSTS**
	Edge marker posts shall be provided as directed by the Engineer and in compliance with the requirements of Standard Specification clause 2003
2004	**PERMANENT ROAD SIGNS**

Permanent Road Signs shall be provided as directed by the Engineer and in compliance with the requirements of the "Manual for Traffic Signs in Kenya" Part IIand standard Specification clause 2004.

2004B EXISTING ROAD SIGNS

Where directed by the Engineer, the Contractor shall take down road signs includingall posts, nuts, bolts and fittings, and remove and dispose of the concrete foundationand backfill the post holes. The signs shall be stored as directed by the Engineer.

Measurement and payment for taking down road signs shall be made by the number of signs of any type and size taken down, cleaned and stored as directed.

2005 ROAD MARKING

Paint for road marking shall be internally reflectorised hot applied thermoplastic material in accordance with Clause 219 of the Standard Specification.

The rates inserted in the Bills of Quantities for road marking shall include for prior application of approved tack coat.

2006 GUARDRAILS

Contrary to the Standard Specification, guardrail posts shall be concrete 200 mm diameter set vertically at least 1.2m into the shoulder as directed by the Engineer. Spacer blocks shall also be made of concrete.

Beams for guardrails shall be "Armco Flex-beam" or similar obtained from amanufacturer approved by the Engineer.

2007 KERBS

(a) Vertical Joints

Vertical joints between adjacent kerbs shall not be greater than 5 mm in widand shall have mortar consisting of 1:3 cement: sand by volume.

b) Transition between flush and raised kerbs

The transition between flush and raised kerbs (e.g. at bus bays) shall betermed as ramped kerbs and shall occur within a length of 2.0m

2008 KILOMETRE MARKER POSTS

Kilometre marker posts shall be provided as directed by the Engineer and incompliance with Standard Specification Clause 2008.

2009 RUMBLE STRIPS

Where directed by the Engineer, the Contractor shall provide, place, trim, shapeand compact to line and level asphaltic concrete rumble strips on the finished shoulders. This shall be done to the satisfaction of the Engineer.

2009B BOLLARDS

Where directed by the Engineer, the Contractor shall provide and install class 20/20 200mm diameter reinforced concrete bollards concreted 300mm into theground.

SECTION 21- MISCELLANEOUS BRIDGE WORKS

2109: **Maintenance of Existing Bailey Bridges**

The operation shall consist of but not limited to: -

1-Removal of damaged and unserviceable bridge parts for safe disposal by the Contractor.
2-Replacement of missing, damaged and unserviceable bridge parts.
3-Repair and reuse serviceable bridge parts
4-Removal of rust on the metal parts of the bridge.
5-Application of aluminium- based paint as specified and directed by the Engineer.
6-Any other work that may be deemed necessary by the Engineer.

Payment for this item shall be a Lump Sum rate provided by the Contractor.

SECTION 22-DAY-WORKS

2202 MEASUREMENTS AND PAYMENT

(a) Plant

Where items of major plant listed in the schedule of Day-works are specified by type (e.g. Concrete mixer etc.) the power rating of such items of plant provided by the Contractor shall not be lower than the power ratings of such plant manufactured within the last two years prior to the date of BID. Any item of major plant employed upon Day-works that has a power rating lower than specifiedabove shall be paid for at rates lower than those in the schedule of Day- works. Thereduction in the rate payable shall be in proportion to the reduction in power rating below that specified above.

SECTION 23- PILING WORKS

2301 METHOD STATEMENT FOR INSTALLATION OF BORED CAST IN PLACE PILES

The work shall include preparation of dry working platform for piles to piers P2, T2 and T3, setting out, excavation and drilling of pile shaft, cleaning and inspection of drilled holes, tying, fixing and placing of reinforcement, concreting and head treatment of piles, test pile and testing.

(a) <u>Dry Working Platform</u>

A dry working platform shall be constructed for the piling works to pier P2, T2 and T3

The working platform shall be principally sandy material with a clay core over the perimeter of the pile head area. The working platform shall be protected against any damage that may be caused by rising river levels by sand bags. The top of the working platform shall be in non-cohesive granular material to ensure the top surface of working platform is maintained free from mud and slippery conditions, during piling works.

b) Test Piles and testing of Piles

(i) Capacity of Test Assembly

The test assembly shall be capable of the safe application of the following loads. The test piles shall be set up at locations be determined by the Engineer or his representative.

Working loads for the piles shall be as follows

Pier T3: 1200 mm Φ vertical piles =4370 KN or 437 tonnes
Pier T2: 1000mm Φ raked piles =3575 KN or 358 tonnes
Pier P2: 800 mm Φ vertical piles = 3610 KN or 362 tonnes

Testing of the piles shall be carried out to 2 times the working loads.

(ii) Test Assembly

The layout of the test assembly to be used is shown on drawing attached. The test assembly will be constructed and supported such that safe access to all parts of the assembly may be made at all times during a test. The force to load the pile shall be provided by jacking against the reaction of four tension piles.

1. Tension Piles

At least four tension piles shall be used for each test assembly. Working piles will not be used as tension piles unless approved by the Engineer. If working piles are used the movement shall be measured to within an accuracy of 0.5mm. Ground Anchors will not be used.

2. Method of Applying Load to the Test Piles

The test force shall be applied concentrically to the test pile by means of a single hydraulic jack. The permissible extension of the jack will be such that for each trial pile the pile can be moved continuously and without repacking for a distance 15% of the test pile base diameter. Allowance will be made for "take-up" of the reaction assembly.

3. Measurement of Load

The whole load will be measured by a single load cell or proving ring calibrated in divisions not exceeding 1% of the maximum load to be applied. The load cell or proving ring shall be calibrated immediately prior to the test and a certificate of calibration will be submitted to the Engineer. All increments of load shall not be allowed to fall below 1% of the specified load. Further calibration will be made after each series of tests whenever adjustments are made to the devices.

4. Measurement of Pile Movement by Dial Gauges

Vertical movement shall be measured by four gauge extensometers having 50 mm travel and graduated in 0.01 mm divisions. Dial gauge readings shall take precedence over precise level measurements on the test pile for the purpose of this test.

The extensometers shall be positioned mutually at right angles and at equal distance from the centre of the test pile. The plungers of the extensometers shall bear on plane glass or machined metal plates set level.

5. Protection of the Test Assembly

The entire measuring assembly may be protected throughout testing against rain, direct sunlight and any other disturbance that could affect the reliability of readings. Construction equipment and persons who are not involved in the testing shall be kept away from the test to avoid disturbance to the measurement apparatus.

(iii) Test procedure

1. Concrete Strength

Pile selected for testing shall not be loaded until the concrete strength as shown by cube tests or rebound hammer, to be at least twice the pile stress at the greatest test load (ignoring any reinforcement) or the pile concrete is at least twenty-eight days old whichever gives the longer period of time.

2. Supervision of Tests

The contractor will keep the tests under continuous and competent supervision to the satisfaction of the Engineer. The contractor shall give the engineer 3 days notice before the commencement of the tests.

3. Facilities for the Engineer

All necessary facilities will be provided to enable the Engineer to take and check readings during the progress of the tests.

4. Dial Gauge Readings

Dial gauge readings of pile movement will be made at frequent intervals during each pile loading cycle as agreed with the Engineer.

5. Rate of vertical Movement Defining Settlement

Each increment of load is to be maintained until the rate of settlement does not exceed 0.2 mm in half an hour measured over a half hour interval and the amount of settlement shall be that recorded when this rate is reached. The maximum load shall be maintained for 6 hours on the final load cycle prior to unloading.

6. Test Load Cycle

Loading and unloading will be made in the following sequence and for the given durations. For each application of the loads the load shall be held for the lesser of the period shown or until the rate of the settlement is less than 0.25mm/hr and slowing down.

Load Percentage of Holding Load	Minimum Time of Working Load
25	1 hour
50	1 hour
75	1 hour
100	1 hour
75	10 Min
50	10 Min
25	10 Min
0	1 Hour
100	1 hour
125	1 hour
150	1 hour
175	1 hour
200	6 hours
175	10 min
150	10 min
125	10 min

100	10 min
50	10 min
25	10 min
0	10 min
0	1 hour

7. Test Reports

At the conclusion of work each day the contractor will send to the Engineer a copy of the daily record sheets of all records of the tests. The schedule of record data shall be as indicated in clause 2115.15 (b) of the special specifications.

c) Order of piling works

The Engineer will be given at least five days before installation of test piles. Prior to the installation of foundation piles, the test pile with four anchor piles will be installed at a location to be determined by the Engineer.

A working program on the order of pile installation shall be given to the Engineer one week before works on the piles is started. Piling will be carried out first on Southern side followed by Northern side. Piling will be carried out on Pier piles followed by Abutment piles. Any changes in the works program will be advised to the Engineer in good time before they are implemented.

d) Setting Out

The pile locations will be set out, from the pier and abutment bearing centres as established accurately for the bridge alignment. Setting out shall be by use of Distomat and theodolite. Each point will be marked clearly with steel pegs and protected against interference. Prior to piling the Engineer's approval will be required for the setting out.

e) Excavation and Drilling of Pile shaft

Excavation of the pile shaft shall be by anger boring. This shall be carried out inside a temporary steel casing and shall be supplied for the full length of the bore.

The bottom of the temporary casing shall be kept sufficiently far below the boring to prevent the inflow of soil and the formation of cavities in the surrounding ground. A recommended depth of 1.5m will be adopted subject to the approval of the Engineer.

Soils removed from the pile borehole will be examined and compared with the description stated on the site investigation borehole records.

The sequence of excavation of the pile shafts shall be agreed with the Engineer prior to the boring. This will be set out in order to ensure that newly concreted piles are not affected by boring in adjacent ground.

f) Cleaning and Inspection of Hole

On completion of the drilling of the pile shaft, the hole will be cleaned to remove all loose material and foreign matter existing at the bottom of the hole. The bored hole shall be checked for verticality to ensure that the tolerances and depths of pile required have been achieved.

Physical inspection of the hole shall be made by providing adequate lighting, down the shaft.

g) Reinforcement

The reinforcement cage shall be cut, tied and fixed prior to the completion of the boring to suit the pile length and head. Concrete spacer blocks for the base of the steel cage and sides will ensure cover to reinforcement. These will be adequately provided, but in no case lesser than 3 meter intervals.

Minimum lap lengths shall be maintained as stated in the drawings or as directed by the Engineer. In order to prevent failure of the re-bar cage joints due to its own weight or on impact with the bottom of the excavation, guide hoops shall be bound sufficiently or intermittent fillet welds shall be used on the corresponding bars at the lap joints as directed by the Engineer.

h) Concreting

Concrete shall be mixed in accordance with the requirements of section 17 of the Standard Specification of Roads and Bridge construction 1986, and conforming to material requirements, slump and strength specifications given in the drawings.

The concrete shall be poured by means of a tremie pipe of internal diameter 150mm. During the placing of concrete, the bottom of the tremie pipe will be maintained at least 2m into the newly placed concrete.

The finished level of the concrete shall be at least 1 meter higher than the design cut off level to permit the removal of laitance formed at the top of pile and to facilitate effective head treatment.

The temporary casing shall be withdrawn after the concreting of the shaft in stages and as agreed with the Engineer.

The holes forming the free bore from top of pile to the ground level shall be filled with clay material, upon completion of concrete works.

i) Levelling Concrete (Seal Concrete)

On completion of piling, the ground around the pile cap shall be excavated to the level of the bottom of the pile cap protected by a cofferdam. Levelling concrete class 20/20 shall be placed on the bottom of the excavation of the cofferdam, by use of a tremie pipe to help pump out water inside the cofferdam. The bottom of the cofferdam shall thereafter be maintained dry by continuous pumping from sumps to facilitate head treatment and concreting of pile cap.

j) Pile Head Treatment

After the levelling concrete has hardened and the cofferdam has been dewatered by pumping, the top surface and head of pile shall be cut and cleaned to the design cut off level to prepare for the steel fixing and concrete casting of the pile cap.

k) Sheet piles and their Installation on Pier T3

Pile driving shall by use of a vibro head powered by a hydraulic system. On completion of the excavation of piles heads, the vibro head shall be set up and sheet piles assembled and driven in place. The level of the sheet piles to be driven shall be determined by the Engineer.

The sheet piles to be used shall be Frodingham or other similar of dimensions shown in the drawing. The sheet piles shall be coated with tar to the approval of the Engineer.

2302 BORED CAST IN PLACE PILES

Material and Workmanship

a) Bentonite

If necessary, the Engineer shall instruct Contractor to use bentonite for the support sides of the hole. If bentonite is used it shall comply with Publication 163: **Drilling fluid materials** of the Engineering Equipment and Materials Users Association.

A certificate shall be obtained by the Contractor from the manufacturer of the bentonite powder, showing the properties of each consignment delivered to the Site. This certificate shall be made available to the Engineer on request. The properties to be given by the manufacturer are the apparent viscosity range (in centipoises) and the gel strength range (in newtons per square meter) for solids in water.

Bentonite shall be mixed thoroughly with clean fresh water to make a suspension which will maintain the stability of the pile excavation for the period necessary to place concrete and complete construction. The temperatures of the water used in mixing the bentonite suspension, and of the suspension when supplied to the borehole, shall be not lower than 5 ^{o}C.

Where saline or chemically contaminated groundwater occurs, special precautions shall be taken to modify the bentonite suspension or prehydrate the bentonite in fresh water so as to render it suitable in all respects for the construction of piles.

The frequency of testing drilling fluid and the method and procedure of sampling shall be proposed by the Contractor prior to the commencement of the work. The frequency may be subsequently be varied as required, depending on the consistency of the results obtained.

Control tests shall be carried out on the bentonite suspension, using suitable apparatus. The density of freshly mixed bentonite suspension shall be measured daily as a check on the quality of the suspension being formed. The measuring device shall be calibrated to read to within 0.005 g/ml. Tests to determine density, viscosity, shear strength and pH value shall be applied to bentonite supplied to pile boring. For average soil conditions the results shall generally be within the ranges stated in Table 2114-1. The tests shall be carried out until a consistent working pattern has been established, account being taken of the mixing process, any blending of freshly mixed bentonite suspension and previously used bentonite suspension and any process which may be used to remove impurities from previously used bentonite suspension. When the results show consistent behavior, the tests for shear strength and pH value may be discontinued, and tests to determine density and viscosity shall be carried out as agreed with the Engineer. In the event of a change in the established working pattern, tests for shear strength and pH value shall be reintroduced for a period if required.

Table 2114-1

Propertt to be Measured	**Range of results at 20 ºC**	**Test Method**
Density	Less than 1.10g/ml	Mud density balance
Viscosity	30-90s	Marsh cone method
	or	
	less than 20 cP	Fann Viscometer
Shear strength	1.4-10N/m^2	Shearometer
	or	
(10 minute gel strength)	4-40 N/m^2	Fann Viscometer
pH	9.5 – 12	pH indicator paper strips or electrical pH meter to BS3445

b) Steel Reinforcement

Reinforcement shall comply with Section 17 of the Standard Specification. It shall be made up into rigid cages which will not distort during installation or when placing concrete. Longitudinal bars up to 12 meters shall be in single lengths. Joints in longer bars shall be formed by laping as specified in the drawing or acceptable to the Engineer. The number of joints in longitudinal steel bars shall be kept to a minimum. Joints in steel reinforcement shall be such that the full strength of each bar is effective across the joint and shall be made so that there is no detrimental displacement of reinforcement during the construction of the pile, following the guidance of BS 8110. Reinforcement shall be maintained in its correct position during concreting of the pile, to allow a vertical tolerance of +150/-50 mm on the level of the reinforcement projecting above the final cut-off level. Joints shall be staggered along the length of the cage. Cover to reinforcement shall be not less than 50 mm except at bottom base of pile where minimum cover shall be 100mm. Spacers shall be designed and manufactured using durable materials which shall not lead to corrosion of the reinforcement or spalling of the concrete cover.

c) Concrete

Concrete shall be of the class 35/20 and shall comply with Section 17 of the Standard Specification.

The consistency of the concrete and the shape of the aggregates shall be suitable for placing and for properly filling the voids formed in the ground to ensure that a dense homogenous pile is produced, having regard to the method of compaction inherent in the type of piling system adopted. If necessary, the concrete shall be suitable for self compaction without segregation. The workability and method of placing of the concrete shall be such that a continuous monolithic concrete or grout shaft of the full cross-section is formed. Concrete shall be transported from the mixer to the pile in such a manner that segregation of the mix does not occur. The concrete shall be placed without such interruption as would allow the previously placed batch to have achieved a stiffness which prevent proper amalgamation of the two concrete batches.

Workability measured at the time of discharge into the pile bore shall be in accordance with the limits shown in Table 2114-2

Table 2114-2 Piling Mix Workability

Piling mix workability	Workability Target flow, mm.	Workability Slump range, mm	Typical conditions of use (The concrete and aggregate sizes must be compatible with reinforcement spacing)
A	Not applicable	75-125	Placed into water free unlined or permanently lined bore of 600mm diameter or over, or where casting level lies below temporary casing; reinforcement spaced at 100mm centres or greater, leaving ample room for free movement of concrete between bars.
B	Target flow 500+/- 50	Slump 100 – 175	Where reinforcement is spaced at less than 100 centres; where cut off level of concrete is within temporary casing; where pile bore is water free and the diameter is less than 600mm.
C	Target flow 550+/-50	Slump 150 or more	Where concrete is to be placed by tremie under water or support fluid or by pumping or by continuous flight auger.

Internal vibrators shall not be used to compact concrete. The cement content in any mix shall be not less than 400kg/m^3

Sequence of Forming Piles

The sequence and method of forming piles shall be acceptable to the Engineer. Where there is evidence that the sequence of construction adversely affects piles which have already been installed, the Engineer may require the Contractor to revise the sequence.

Forming Holes for Piles

Holes shall be formed vertically or to the rake shown on the drawings within the tolerances stated in Clause 2110.2. The position of completed holes shall be checked and agreed with the Engineer before any concrete is placed therein.

No hole shall be bored within a distance of three diameters of a recently constructed pile until the concrete in that pile is at least three days old.

During boring, samples of the spoil arising and of the ground water shall be taken as instructed by the Engineer, placed in clearly labelled polythene bags and transported to a laboratory nominated by the Engineer.

Adequate precautions shall be taken at all times by the use of casings or other means including the use of bentonite to prevent the surrounding material and excessive quantities of surface and ground water entering the holes during the construction of piles.

Temporary casings used in boreholes shall be of uniform cross-section and free from significant distortion throughout their length and from any projections or the like which might prevent withdrawal or cause damage to the pile during withdrawal. The Contractor is expected to exercise extra caution when withdrawing temporary casings from raked piles.

When holes are bored with bentonite the level of the bentonite shall be kept high enough to prevent any flow of groundwater into the hole. If a rapid loss of bentonite from the hole occurs, boring shall immediately cease and the Engineer shall be informed.

All reasonable steps shall be taken to prevent the spillage of bentonite suspension on the Site in areas outside the immediate vicinity of boring. Disposal of bentonite shall comply with the regulations of the local controlling authority.

Water shall not be pumped from boreholes unless the source of the water has first been sealed with a lining or plug.

Any unexpected change in ground characteristics shall be immediately reported to the Engineer and any change in the procedure for forming holes which are thereby made necessary shall be agreed with the Engineer.

An enlarged base mechanically formed shall not be smaller than the dimensions specified and shall be concentric with the pile shaft to within a tolerance of 10% of the shaft diameter. The sloping face of the fustrum forming the enlargement shall make an angle to the horizontal of not less than 55° except where the gross end-bearing pressure does not exceed 400 kN/m^2, when it may be reduced to 45°.

Inspection of Holes for Piles

All holes shall be subject to approval by the Engineer prior to concreting, and the Contractor shall inform the Engineer immediately after completion of the excavation of each hole.

All loose and disturbed soil, slurries and contaminated material shall be removed from the shaft and base of each pile. All linings and casings shall be smooth and clean and free from adhering concrete.

The holes shall be de-watered whenever possible in cases where the subsequent ingress of water can be prevented, unless in the opinion of the Engineer de-watering might lead to disruption of the ground or prejudice the formation of a sound pile.

The Contractor shall provide all reasonable facilities including lights, binoculars and any other equipment to enable the Engineer to inspect the holes and to take any measurements that he may require.

Concreting Piles

The time interval between completion of boring and placing concrete shall be as short as possible, and in any case shall not be longer than 6 hours.

Concrete shall be placed in accordance with the requirements of Section 17 of the Standard Specification without causing segregation. Care shall be taken to ensure that the concrete at the bottom of the piles is not deficient in cement.

Wherever possible, concrete shall be placed in the dry. Where holes cannot be dewatered or where after de-watering the ingress of water would prejudice the formation of a sound pile, the concrete shall be placed under water or bentonite and the concrete mix and strength shall be adjusted as specified or as agreed by the Engineer.

When placing concrete in the dry, it shall be discharged into a conical hopper, with a short length of pipe attached, placed centrally over the head of the tremie unless otherwise approved and shall not be discharged freely into the water or drilling fluid. Before placing concrete, measures shall be taken to ensure that there is no accumulation of silt or other material at the base of the boring and the Contractor shall ensure that heavily contaminated bentonite suspension shall be taken from the base of the boring using an approved sampling devise. If the specific gravity of the suspension exceeds 1.25 the placing of concrete shall not proceed. In this event the Contractor shall modify or replace the bentonite as approved to meet the Specification.

During and after concreting care shall be taken to avoid damage to the concrete from pumping and dewatering operations.

The hopper and pipe of the tremie shall be clean and watertight throughout. The pipe shall extend to the base of the boring and sliding plug or barrier shall be placed in the pipe to prevent direct contact between the first charge of concrete in the pipe of the tremie and the water or drilling fluid. The pipe shall at all times penetrate the concrete which has previously been placed within a minimum embedment of 3m and shall not be withdrawn from the concrete until completion of concreting. At all times a sufficient quantity of concrete shall be maintained within the pipe to ensure that

the pressure from it exceeds that from the water or drilling fluid. The internal diameter of the pipe of the tremie shall be not less than 150mm for concrete made with 20mm aggregate and not less than 200mm for concrete made with 40mm aggregate. It shall be so designed that external projections are minimized allowing the tremie to pass through reinforcing cages without causing damage. The internal face of the pipe of the tremie shall be free from projections.

Concrete in the pile shall be placed in one continuous operation. Precautions shall be taken to ensure that the concrete shall be sound and of full cross-section throughout. Where concreting is interrupted, the Contractor shall inform the Engineer immediately and shall carry out such measures as the Engineer may require. No spoil, liquid or other foreign matter shall be allowed to contaminate the concrete.

Any temporary lining tubes shall be withdrawn during concreting while the concrete is still workable and in such a way that no voids are produced and the stability of the hole is maintained.

The inflow of ground water shall be prevented by maintaining adequate head of concrete or by other means acceptable to the Engineer. Piles will not be accepted where there has been flow of ground water through or against unset concrete. The level of concrete shall at all times be at least one meter above the bottom of the lining tube.

The Contractor shall ensure that the concrete up to the cut-off level is sound and free from laitance, and he shall finish the concrete at least 300mm and not more than one meter above the specified cut-off level of any pile is to be below the standing water table, the concrete shall be cast to a minimum of 150mm above the water table.

Protection of Pile Heads

When the casting level of piles is below existing ground level the remaining empty bore shall be temporary backfilled with suitable material unless otherwise instructed by the Engineer.

Unsatisfactory or Incorrectly Positioned Piles

The effects of piles which have departures from position or alignment in excess of those permitted by the Specification or are considered unsatisfactory for any other reason shall be remedied by the Contractor in a manner acceptable to the Engineer.

All condemned or abandoned holes for piles shall be back-filled with concrete up to the cut-off levels or other level acceptable to the Engineer at the Contractor's expense.

Preparation of Pile Heads

Pile heads shall be prepared for incorporation into the Permanent works by cutting the concrete back to a sound surface at the required level without damaging the reinforcement. All dust and loose concrete shall then be removed. The length of reinforcement available for splicing shall not be less than 50 diameters.

Records

In addition to the piling records required under Clause 2109 of the special specification, the following information for

bored cast–in-pace is also to be submitted: -

a) Type of equipment used and method of boring;
b) Temporary casing, method of installation and extractions;
c) Strata encountered during boring;
d) Details of enlarged (if any);
e) Standing ground water level;
f) Date of concreting;
g) Length of temporary casing;
h) Details of bentonite fluid used;
i) Details of soil samples taken and insitu tests carried out;
j) Details of reinforcement;
k) Method of placing concrete and conditions pertaining;
l) Details of concrete, including concrete mix, aggregate type and source, cement type, slump and cube test results;
m) Amount of concrete used in pile;
n) Concrete level before and after extraction of casing.

Testing of Piles

Installation and testing of piles shall be carried out as specified in Clause 2115 of the Special Specification.

Working loads for the piles shall be as follows:-

Piers T3, T2 & P 2

i. 1200mm Φ vertical piles on pier T3: 4370 KN
ii. 1000mm Φ raked (5:1) piles on pier T2: 3575 KN
iii. 800 mm Φ vertical piles on pier P2: 3610 KN

Measurements and Payments

Measurement and payments shall be made as specified in the special specifications and indicated in the Bills of quantities.

SECTION 24 – ELECTRICAL AND STREET LIGHTING INSTALLATION

2401 GENERAL

This specification is to be read in conjunction with the Drawings which are issued with it. The items of work comprising Bill of Quantities shall be carried out in accordance with this specification.

The works comprise a complete installation of street lighting system for the section of road that shall be determined by the Engineer. The Works include trenching for and installation of electrical cables, erection of lighting columns and mounting of street light lanterns, installation of controls and all associated electrical wiring, liaison and payment of fees to the electrical power provider, and testing and commissioning of the full system.

2402 STANDARD OF MATERIALS

Where the material and equipment are specifically described and named in the Specification followed by approved equal, they are so named or described for the purpose of establishing a standard to which the Contractor shall adhere.

Should the Contractor install any material not specified herein before receiving approval from the proper authorities, the Engineer shall direct the Contractor to remove the material in question immediately. The fact that this material has been installed shall have no bearing or influence on the decision by the Engineer.

All materials condemned by the Engineer as not approved for use, are to be removed from the premises and suitable materials delivered and installed in their place at the expense of the Contractor. All materials required for the works shall be new and the best of the respective kind and shall be of a uniform pattern.

2403 WORKMANSHIP

The workmanship and method of installation shall conform to the best standard practice. All work shall be performed by skilled tradesmen and to the satisfaction of the Engineer. Helpers shall have qualified supervision.

Any work that does not in the opinion of the Engineer, conform to the best standard practices will be removed and reinstated at the Contractor's expense.

Permits, Certificates or Licenses must be held by all tradesmen for the type of work in which they are involved where such Permits, Certificates or Licenses exist under Government Legislation.

The Contractor shall comply with the following:-

1. Government Electricity Specifications No. 1 and 2.
2. All requirements of Kenya Power and Lighting Company Limited, IEE wiring regulations and Communications Authority of Kenya (CAK).

2404 PROCUREMENT OF MATERIALS

The Contractor is advised that no assistance shall be given in the procurement or allotment of any materials or product to be used in or necessary for the construction and completion of the works.

Contractor is warned that he must make his own arrangements for the supply of materials and/or products specified in or required for the Contract. The Contractor may be called upon to show evidence that satisfactory arrangements have been made for the procurement of any or all materials and/or products required to complete the works. Copies of purchase orders to suppliers may be requested.

The Contractor shall be responsible for all site and drawing measurements required for completion of quantities or materials required the proper execution of Works.

The Contractor shall order material based on quantities taken from his own approved working drawings and as verified and approved by the Engineer and not from the quantities shown on the Contractor Drawings or in the Bill of Quantities.

No claims or extra payment will be considered on the ground of insufficient knowledge, inaccurate measurements or other errors on the part of Contractor.

2405 WORKING DRAWINGS

Before manufacture or fabrication is commenced the Contractor shall submit two (2) copies of details Drawings of all control pillars, meter cubicles, medium voltage switchboards including their components showing all pertinent information including sizes, capacities, construction details, etc, as may be required to determine the suitability of the equipment for the approval of Engineer. Approval of the detailed Drawings shall not relieve the Contractor of the full responsibility of errors or the necessity of checking the drawings himself or of furnishing the materials and equipment and performing the work required by the plans and Specifications.

2406 AS BUILT DRAWINGS

These diagrams and Drawings shall show the completed installation including sizes, runs and arrangements of the installation. The Drawings shall to scale not less than 1:50 and shall include plan views and section.

The Drawings shall include all the details which may be useful in the operation, maintenance or subsequent modifications or extensions to the installation.

Three sets of diagrams and Drawings, including one electronic copy, shall be provided, all to the approval of the Engineer.

One colored set of line diagrams relating to operating and maintenance instructions shall be framed and, mounted in a suitable location.

2407 REGULATIONS AND STANDARDS

All work executed by the Contractor shall comply with the current edition of the “Regulations” for the Electrical Equipment of Buildings, issued by the Installation Electrical Engineers and with the Regulations of the Local Electricity Authority.

Where the two sets of regulations appear to conflict, they shall be clarified by Engineer. All materials used shall comply with relevant Kenya Bureau of Standards Specifications.

2408 SETTING OUT WORK

The Contractor, at his own expenses, is to set out works and take all measurements and dimensions required for the erection of his materials on Site; making any modifications in details as may be found necessary during the progress of the Works; submitting any such modifications or alterations in detail to the Engineer before proceeding and must allow his Tender for all such modifications and for the provision of any such sketches or Drawings related thereto.

2409 POSITIONS OF ELECTRICAL PLANT AND APPARATUS

The routes of cables and approximate positions of switchboards etc, as shown on the Drawings shall be assumed to be correct for purpose of Tendering, but exact positions of all electrical Equipment and routes of cables must be agreed on site with Engineer before any Work is carried out.

2410 M.C.B. DISTRIBUTION PANELS AND CONSUMER UNITS

All cases of MCB Panels and consumer units shall be constructed in heavy gauge sheet hinged covers.

Removable undrilled gland plates shall be provided on the top and bottom of the cases. Miniature circuit breakers shall be enclosed in modeled plastics with the tripping mechanism and are chambers separate and sealed from the cable terminals.

The operating dolly shall be trip free with a positive movement in both make and break position. Clear indication of the position of the handle shall be incorporated.

The tripping mechanism shall be on inverse characteristic to prevent tripping in temporary overloads and shall not be affected by normal variations in ambient temperature.

The breakers shall be grouped in distribution panels as specified with all live metal being shrouded or concealed during normal use.

A locking plate shall be provided for each of breaker. A complete list of circuit details on typed cartridge paper glued to stiff cardboards and covered with a sheet of Perspex, and held in position with four suitable fixings, shall be lifted to the inner face of the lids of each distribution panel. The appropriate MCB ratings shall be stated on the circuit chart against each circuit in use.

Ivorine labels shall be secured to the installation barriers in such a manner as to indicate the number of the circuits shown on the circuit chart. Insulated barriers shall be fitted between phases, and neutrals in all boards, and to shroud live parts.

Neutral cables shall be connected to the neutral bar in the same sequence as the phase cables are connected to the MCB's. This shall also apply to earth bars when installed.

2411 FUSED SWITCHGEAR, ISOLATORS AND CUTOUTS

All fused switchgear and isolators whether mounted on machinery, walls or industrial panels shall conform to the requirements of KS 04-226 part 1: 1985.

All contacts are to be fully shrouded and are to have a breaking capacity on manual operations as required by KS 04-182: 1980.

Fuse links for fused switches are to be of high rupturing capacity cartridge type, conforming to KS 04 – 183: 1978.

Isolators shall be load breaking/fault making isolators.

Fused switches and isolators are to have separate metal enclosures. Mechanical interlocks are to be provided between the door and main switch operating mechanism so arranged that the door may not be opened with the switch in the "ON" position. Similarly; it shall not be possible to close the switch with the door open except that provision to defeat the mechanical interlock and close the switch with the door in the isolators shall be clearly indicated by a mechanical flag indicator or similar device. In T.P and N fused switch units, bolted neutral links are to be fitted.

2412 CONDUITS AND CONDUIT RUNS

Conduit systems are to be installed so as to allow the loop-in system of wiring.

All conduits shall be black rigid super high impact heavy gauge Class "A" PVC in accordance with KS 04-179: 1988 and IEE Regulations. No conduit less than 20mm in diameter shall be used anywhere in this installation.

Conduit shall be installed buried in plaster work and floor screed except when run on wooden or metal surface when they will be installed surface supported with saddles every 600mm. conduit run in chases shall be firmly held in position by means of substantial pipe hooks driven into wooden plugs.

The Contractor attention if drawn to the necessity of keeping all conduits entirely separate from other piping services such as water and no circuit connections will be permitted between conduits and such pipes.

All conduits shall be arranged wherever possible to be self-draining to switch boxes and conduit outlet points for fittings.

The systems, when installed and before wiring shall be kept plunged with well switch boxes and when short conduit pieces are used as plugs, they shall be doubted over and tied firmly together with steel wire. Before wiring all conduit systems shall carried out until the particular section of the conduit installation is complete in every respect.

The sets and bends in conduit runs are to be formed on Site using appropriate size bending springs and all radii of bends must not be less than 2.5 times the outside diameter of the conduit. No solid or inspection bends, tees or elbows will be used.

Conduit connections shall either be by a demountable (screwed up) assembly or adhesive fixed and water tight by solution. The tube and fittings must be clean and free of all grease before applying the adhesive. When connections are made between the conduit and switch boxes, circular or non-screwed boxes and care must be taken to ensure that no rough edges of conduit stick out into the boxes.

Runs between draw in boxes are not to have more than two right angle bends or their equivalent. The Contractor may be required to demonstrate to the Engineer that wiring in any particular run easily withdrawable and the Contractor may, at no extra cost to the Contract; be required to install addition draw-in boxes required. If conduit is installed in straight runs in excess of 6,000mm, expansion couplings as manufactured by Engtube, shall be used at intervals of 6,000mm.

Where conduits runs are to be concealed in pillars and beams, the approval of the Engineer, shall be obtained. The Contractor shall be responsible for making the accurate position of all holes, chases etc., on site, of if the Engineer so directs, shall provide the Contractor with dimensional Drawings to enable him to mark out and form all holes and chases. Should the Contractor fail to inform the Engineer of any inaccuracies in this respect, they shall be rectified at the Contractor's expenses.

It will be the Contractors responsibility to ascertain from site, the details of reinforced concrete or structural steelwork and check from the builder's Drawings the positions of wills, structural concrete and finishes. No reinforced concrete or steelwork may be drilled without first obtaining the written permission of the Engineer.

The Drawings provided with these specifications indicate the appropriate positions only of points and switches, and it shall be the Contractors responsibility to mark out and centre on Site the accurate positions where necessary in consultation with the Engineer. The Contractor shall be responsible for the accuracy of the final position.

2413 CONDUIT BOXES AND ACCESSORIES

All conduit outlets and junction boxes are to be either malleable iron and of standard circular pattern of the appropriate type to suit saddles being used or supper high impact PVC manufactured KS 04 -179: 1983.

Small circular pattern boxes are to be used with conduits up to and including 25mm outside diameter and larger. Rectangular pattern adaptable boxes are to be used for conduits of 32mm outside diameter and larger. For Drawing in of cables in exposed runs of conduit, standard pattern through boxes are to be used:

Boxes are to be not less than 50mm deep and of such dimensions as will enable the largest appropriate number of cables for the conduit sizes to be drawn in without excessive bending.

Outlet boxes for lighting fittings are to be of the loop-in type where conduit installation is concealed and the Contractor shall allow one such box per fitting, except where fluorescent fittings are specified when two such boxes per fitting shall be fitted flush with ceiling and if necessary fitted with break joint rings. Pattresses shall be fitted where required to outlets on surface conduit runs.

Adaptable boxes are to be of PVC or mild steel (of not less than 12swg) and black enameled or galvanized finish according to location. They shall be square or oblong shape location. They shall be of square or oblong shape complete with lids secured by four 2 BA brass roundhead screws. No adaptable box shall be less than 75mm x 75mm x 50mm or larger than 300mm x 300mm x 75mm and shall be adequate in depth in relation to the size of conduit entering it. Conduit shall only enter boxes by means of conduit bushes.

2414 LABELS

Labels fitted to switches and fuse boards:-

(i) Shall be Ivorine engraved black on white.

(ii) Shall be secured by R.H. brass screws of same manufacturing throughout.

(iii) Shall indicate on switches:-

a) Reference number of switch
b) Specified current rating
c) Item of equipment controlled.

(iv) Shall indicate on MCB panels: -

a) Reference number
b) Type of board, i.e., lighting, sockets, etc.
c) Size of cable supplying panel
d) Where to isolate feeder cable

(v) Shall be generally not less than 75 x 50mm.

2415 EARTHING

The earthing of the installation shall comply with the following requirements; -

(i) It shall be carried out in accordance with the appropriate sections of the current edition of the Regulations, for the Electrical Equipment of Building issued by Institute of Electrical Engineers of Great Britain.

(ii) At all main distribution panels and main service positions a 25mm x 3mm minimum cross section area Copper tape shall be provided and all equipment including the lead sheath and armouring of cables, distribution boards and metal frames shall be bonded thereto.

(iii) The earth tape in Sub-Clause (ii) shall be connected by mean of a copper tape or cable of suitable cross-sectional area to an earth electrode which shall be a copper earth rod (see later Sub-Clause).

(iv) All tapes to be soft high conductivity copper, untinned except where otherwise specified and where run underground on or through walls, floors, etc., it shall be served with corrosion resisting tape or coated with corrosion compound and braided.

(v) Where the earth electrode is located outside the building a removable test link shall be provided inside the building as near as possible to the point of entry to the tape, for isolating the earth electrode for testing purposes.

(vi) Earthing of sub-main equipment shall be deemed to be satisfactory where the sub-main cables are M.I.C.S. or conduit with separate earth wire, and installation is carried out in accordance with the figures stated in the current edition of the I.E.E. Regulations.

(vii) Where earth rod is specified (see Sub-Clause (iii) it shall be proprietary manufactured, solid hand drawn copper 15mm diameter driven into the ground to a minimum depth of 3.6m. It shall be made up to 1.2m sections with internal screw and socket joints and fitted with hardened steel tip and driving cap.

(viii) Earth plates will not be permitted.

(ix) Where an earth rod is used the earth resistance shall be tested in the manner described in the edition of the I.E.E Regulations, by the Contractor in the presence of the Engineer and the Contractor shall be responsible for the supply of all test equipment.

(x) Where copper tape is fixed to the building structure, it shall be by means of purpose mad non-ferrous saddles which space the conductor away from the structure a minimum distance of 20mm. Fixings shall be made using purpose made plugs. No fixings requiring holes to be drilled through the tape will be accepted.

(xi) Joints in copper tape shall be tinned before assembly riveted with a minimum of two copper rivets and seated solid.

(xii) Where holes are drilled in the earth tape for connection to items of equipment the effective cross sectional area must not be less than required to comply with the IEE Regulations.

(xiii) Bolts, nuts and washers for any fixing to the earth tape must be of non-ferrous material.

(xiv) Attention is drawn to the need for the earthing metal parts of lighting fittings and for bonding ball joint suspension in lighting fittings.

2416 CABLES AND FLEXIBLE CORDS

All cables used in this Contract shall be manufactured in accordance with the current appropriate Kenya Standard Specifications which is as follows:-

PVC Insulated Cables and Flexible Cords - KS 04 – 192 : 1988

PVC Insulated Amoured Cables	-	KS 04 – 194 : 1990
Amouring of Electric cables	-	KS04 – 290 : 1987

The Contractor will, at Engineer's discretion, be required to submit samples of cables for the Engineer's approval. The Engineer reserves the right to call for the cables of an alternative manufacture without any extra cost being incurred.

PVC insulated cables shall be 500/1000 volt grade. No cables smaller than 1.5mm^2 shall be used unless otherwise specified. The installation and the finish of cables shall be as detailed in later Clauses. The colour of cables shall conform to the details stated in the "Cables Braid and Insulation Colours" Clause.

2417 ARMOURED P.V.C. INSULATED AND SHEATHED CABLES

These shall be 600/1000 volt grade manufactured to KS 04 – 194 : 198 and KS 04 – 187/188 with copper stranded conductors.

The wire armour of the cable shall be used wholly as an earth continuity conductor and the resistance of the wire armour shall have a resistance not more than twice of the largest current carrying conductor of the cables.

PVC/SWA/PVC cables shall be terminated using "Telecom B" type or approved equal or approved equal glands and a PVC tapered sleeve shall be provided to shroud each gland.

Where cables rise from floor level to switchgear etc., they shall be protected by PVC conduit, to a height of 600mm from finished floor level, whether the cable is run on the surface or recessed into the wall.

2418 CABLE SUPPORTS, MARKERS AND TILES

All PVC/SWA/PVC cables run inside the building shall be fixed bin rising ducts or on ceilings by means of die cost cables hooks or clamps, or appropriate size to suit cables, fixed by studs and back nuts to their channel sections.

Alternatively, fixing shall be by BICC claw type cleating system with die-cast cleats and galvanized mild steel back straps or similar approved equal method. For one or two cables run together the cleats shall be fixed a special channel section supports or back straps described above which shall in turn be secured to walls or ceilings of ducts by raw bolts.

In excessively damp or corrosive atmospheric conditions special finishes may be required and the Contractor shall apply to the Engineer for further instructions before ordering cleats and channels for areas.

The above type of hooks and clamps and channels or cleats and black straps shall also be used for securing cables in vertical ducts.

Cables supports shall be fixed at 600mm maximum intervals, the supports being supplied and erected under this Contract. Saddles shall not be used for supporting cables nor any other type of fixing other than one of the two methods described above or other system which has received prior approval of the Engineer.

Cables are to be kept clear of all pipe work and the Contractor shall work in close liaison with others services Contractors.

The Contractor shall include for the provision of fixing of approved type of coloured slip on cables end markers to indicate permanently the correct phase and neutral colours on all ends.

Provisions shall be made for supplying and fixing approved non-corrosive metal cable markers to be attached to the outside of all PVC/SWA/PVC cables at 15mm intervals indicating cable size and distinction.

Where PVC/SWA/PVC cables are outside the building they shall be laid underground 750mm deep with protecting concrete interlocking cover tiles laid over which shall be provided and laid under this Contract.

All necessary excavations and reinstatement of ground including sanding or trenches will be carried out by the Contractor, unless otherwise stated.

2419 PVC INSULATED CABLES

Shall of non-braided type as CMA reference 6491 x 600/1000/1000 volt grade cables or equal and approved.
PVC cables shall conform to the details of the "Cables and Flexible Cords" and "Cable Braid and Insulation Colours" Clauses.

2420 HEAT RESISTING CABLES

Final connections to cookers, water heaters, etc., shall be made using butyl rubber insulated cable as CMA reference 610 butyl (Single core 600/1000 volt).
This type of cable shall be used in all instances where a temperature exceeding 100^0F (37.7^0C), but not exceeding 150^0F (65.5^0C) is likely to be experienced. Final connections to all lighting fittings (and other requirements where a temperature in insulated cable or equivalent and approved.

2421 FLEXIBLE CORDS

Shall be insulated in accordance with the "Cable and Flexible Cords" Clause. No cord shall be less than 24/0.2mm in size unless otherwise specified.
Circular white twin TRS flex shall be used for plain pendant fittings up to 100watts. For all other types of lighting fittings, the flexible cable shall be silicone rubber insulated.

No polythene insulated flexible cable shall be used in any lighting fitting or other appliance (see "Heat Resisting Cables" Clause 30).

2422 CABLE ENDS AND PHASE COLOURS

All cables ends connected up in switchgear, MCB panels etc., shall have the insulation carefully cut back and the ends sealed with Hellerman rubber slip on cable end markers.
The markers shall be of appropriate phase colour for switch and all other live feeds to the details of the "Cable Insulation Colours" Clause. Black cable with black end markers shall only be used for neutral cables.

2423 CABLE INSULATION COLOURS

Unless otherwise stated in later clauses, the insulation colours shall be in accordance with table below.
Where other systems are installed the cable colours shall be in accordance with the details stated in the appropriate clause.

System, lighting & Power	**Insulation colour**	**Cable end marker**
Main and sub-mains		
a) Phase b) Neutral	Red Black	Red Black
Sub-Circuits single Phase		
a) Phase b) Neutral	Red Black	Red Black

The cables shall be laid on 50mm bed sifted soil and covered with a 50mm layer of sifted soil. Cable tiles in the standard design shall be laid on top in a continuous formation without gaps in between. When passing under roadways and/or driveways, ducting as specified shall be provided. No trench shall be backfilled without the approval of the Project Manager. Failure to comply with this clause may lead to re-excavation at the Contractor's own expense. Cables shall be "snaked" along their route to allow for ground subsidence and a 2% allowance shall be added to the measured route length.

All cable measurements shall be deemed to include allowance for the above precautions. "Loop-in" and "Loop-out" arrangements shall be used at every poles. Wiring to the lanterns on each pole shall be with 1.5mm P.V.C. twin insulated and sheathed cable with earth wire and shall be protected by 5A cartridge fuse. Cables across the roads and at the entrance of the poles shall be laid in ducts. No underground joints shall be permitted.

Aluminum cables shall only be allowed where specifically instructed in writing by the Project Manager. Special care shall be taken when terminating aluminum conductors. Conductors to be terminated in a pillar type shall be

mechanically sagged and fitted with a phosphor bronze sleeve, whilst those to be terminated with lags shall have these fitted with a purpose made compression tool.

No deviation from the cable route shown on the Contract drawings shall be made for economy or for any other reason without the written approval of the Project Manager.

Cable markers of the Standard design shall be installed where shown on the drawings. After installation the cables shall be tested in accordance with Government Electrical Specification No. 2 and the results recorded.

2424 SUB-CIRCUIT WIRING

For all lighting and sockets wiring shall be carried out in the "looping in" system and there shall be no joints whatsoever. No lighting circuits shall comprise more than twenty (20) points where protected by 10 Amps MCB. Cables with different cross-section area of copper shall not be used in combination.

i. Lighting circuits PVC Cable.
ii. $1.5mm^2$ for all lighting circuits indicated on the drawing.
iii. Power circuits PVC cable (minimum sizes).
iv. $2.5mm^2$ for one, two or three 5Amps sockets wired in parallel.
v. $2.5mm^2$ for one 15Amps socket.
vi. $2.5mm^2$ for maximum of ten switched 13 Amps sockets wired from 30Amps MCB.

The wiring sizes for lighting circuits and sockets are shown on the Drawings. In such cases, the sizes shown on the Drawings shall prevail over the sizes specified.

Wiring sizes for other appliances shall be shown on the Drawing or Specified in later Clauses of this specification.

2425 SPACE FACTOR

The maximum number of cables that may be accommodated in given size of conduit or trunking or duct is not to exceed the number in Tables B.5 and B.6 or as stated in Regulations B.91, and B.118 of the I.E.E Regulations whichever is appropriate.

2426 INSULATION

The insulation resistance to earth and between poles of the whole wiring system, fittings and lamps, shall not be less than the requirements of the latest edition of the I.E. Regulations. Complete tests shall be made on all circuits by the Contractor before the installations are handed over.
A report of all tests shall be furnished by the Contractor to the Engineer. The Engineer will then check test with his own instruments if necessary.

2427 LIGHTING SWITCHES

These shall be mounted flush with the walls, shall be contained in steel or alloy boxes and shall be of the gang's ratings and types shown in the drawing. They shall be as manufactured by M.K Electrical Ltd., or other equal and approved to KS 04 – 247: 1988.

2428 SOCKETS AND SWITCHED SOCKETS

These shall be flush pattern in steel/PVC box and shall be of the gangs and type specified in the Drawings.
They shall be 13 Amps, 3-pin, shuttered, switched and as manufactured by "M.K. Electrical Company Ltd", or other approved equal to KS 04 – 246 : 1987.

2429 FUSED SPUR BOXES

These shall be flush, D.P switch as in steel/PVC box and of type and make specified in the Drawings complete with pilot light and as manufactured by "M.K. Electrical Company Ltd", or other approved equal to KS 04 – 247: 1988.

2430 COOKER OUTLETS

These shall be flush mounted with 13 Amp switched socket outlet and neon indicator lamps.
The cooker control unit shall be as manufactured by "M.K. Electrical Company Ltd", or other approved equal to KS 04 – 247: 1988.

2431 CONNECTORS

These shall be specified in the Drawings with appropriate rating. These shall be fitted lighting fitted at all conduit box lighting point outlets for jointing of looped PVC cables with flexible cables of specified quality.

2432 LAMP HOLDERS

These shall be of extra heavy H.O skirted and shall be provided for every specified lighting fitting and shall be B.C., E.S., or G.E.S as required. All E.S. and G.E.S. holders shall be heavy brass type (except for plain pendants where the reinforced Bakelite type shall be used). The screwed cap of the E.S and G.E.S. holders shall be connected to the neutral.

Where holders are supported by flexible cable, the holders shall have "cord grip" arrangements and in the case of metal shades earthing screws shall be provided on each of the holders.

The Contractor must order the appropriate type of holder when ordering lighting fittings, to ensure that the correct types of holders are provided irrespective of the type normally supplied by the manufacturers.

2433 LAMPS

All lamps shall be suitable for normal stated supply voltage and the number and sizes of lamps detailed on the Drawings shall be supplied and fixed. The Contractor must verify the supply voltage with the supply authority before ordering the lamps

.

Tungsten filament shall be manufactured in accordance with KS 04-112 : 1978 for general service lamps and KS 04 – 307 : 1985 for lamps other than general services. tubular fluorescent lamps shall comply with KS 04 – 464 : 1982.

Pearl lamps shall be used in all fittings unless otherwise specified.

2434 LIGHTING FITTINGS AND STREET LIGHTING LANTERNS

This Contract shall include for the provision, handling charges, taking the delivery, safe storage, wiring (including internal wiring) assembling and erecting of all lighting fittings shown on the Drawings.

All fittings and pendants shall be fixed to the conduit boxes with brass R/H screws. These to be in line with metal finishing of fittings. The lighting fittings are detailed for the purpose of establishing a high standard of finish and under no circumstances will substitute fittings be permitted.

In case of rectangular shaped ceiling fittings, the extreme ends of the fittings shall be secured to suitable support in addition to the central conduit box fittings. Supports shall be provided and fixed by the Contractor.

The whole of the metal work of each lighting fittings shall be effectively bonded to earth. In the case of ball and/or knuckle joints short lengths of flexible cable shall be provided, bonded to the metal work on either side of the joints. If the above provisions are not made by the manufacturers, the Contractor shall include cost of additional work necessary in this tender. See "Flexible Cords" Clause for details of internal wiring of lighting fittings. Minimum size of internal wiring shall be 20/0.2mm (23/0067). Each lighting fitting shall be provided with number type and suspended as shown on the Drawings.

Normally, the units shall be lined up on vertical centre lines, but where it is necessary to mount units at low levels they shall be lined up horizontally.

Street lighting lanterns shall be side entry lanterns for HPS-T lamp with high performance reflector, polycarbonate bowl gear tray with anti0cycling igniter and as Phillips SGS 102 K SKN – T250W II MR AS ST complete with 250W SON lamp or equivalent and approved. The lantern is to be secured with anti-vandalism mechanism on to the steel columns.

2435 POSITIONS OF POINTS AND SWITCHES

Although the approximate positions of all points are shown on the Drawings enquiry shall be made as to the exact positions of all MC.B panels, lighting points, socket outlets etc., before is actually commenced. The Contractor must approach the Engineer with regard to the final layout of all lights on the ceiling and walls.

The Contractor must consult with the Engineer on site regarding the positions of all alterations made necessary by the non-compliance with the Clause.

2436 STREET/SECURITY OUTDOOR LIGHTING COLUMNS

Street lighting columns shall be made from galvanized steel pipe sections conforming to B.S 1840:1952. The columns shall be 15.0 meters steel galvanized floodlighting round column (made from 111 Class "B") complete with 4x400Watts flood light Sodium fittings with Bulbs as Thorn painted with rust proof aluminum paint with a lockable anti-vandalism door.

The column base shall be sunk to a minimum of 1000mm into the ground on 750mm square x 300mm deep 20/20 concrete foundation, and the pole up to 150mm from the ground level shall be surrounded in 250mm 20/20 concrete. The top bracket and plain section of the column shall be common to and interchangeable with all brackets with maximum mismatch tolerance of 3mm between two coats of aluminum paint. All columns shall be complete with 100/80 Amps fused twin cut-out as Henry (UK) or equivalent. The lockable door to the connectors shall be 1700mm from ground level.

2437 TIMING CONTROL SWITCH

These shall be installed with a 24-hour Timer switch with 200hr reserve (Omron) which will operate on a present timing. It shall be installed in every Control Pillar to serve the lighting fittings served by that particular control pillar. The initial adjustment will be done with the approval of the Engineer.

2438 WIRING SYSTEM FOR STREET LIGHTING

Cables shall 6mm^2 2-core and 4-core as indicated on the Drawings, and shall be laid in a cable trench 600mm deep along the road side and 900mm deep across the roads and 900mm away from the road kerb or 1,500mm away from the edges of the road. "Loop-in" and "loop-out" arrangement shall be used at every pole. Wiring to the lanterns on each pole shall be with 1.5mm^2 PVC twin insulated and sheathed cable with earth wire shall be laid at least 600mm below the finished road level on a compact bed of murram at least 50mm thick and covered with a concrete surrounded 150mm thick.

2439 METAL CONTROL PILLAR

These shall be metal clad fabricated as per Contract Drawings and Specification. The Contractor shall supply, install, test and commission control pillars including supplying, fixing and connecting switch gears as detailed on the appropriate Drawings.

2440 CURRENT OPERATED EARTH LEAKAGE CIRCUIT BREAKER

Current operated earth leakage breaker shall conform to B.S.S. 4293: 68 rated at 240volts D.P. 50cycles AC Mains.

The breaker shall be provided with test switch and fitted in weather proof enclosure for surface mounting. The rated load current and earth fault operating current shall be specified in the Drawings. These shall be as manufactured by Crabtree, Siemens or other equal and approved. They shall be of the high sensitivity type i.e. they will trip in o30milliseconds for a leakage current of 30m A and shall be of a type not requiring a mains supply to operate the trip mechanism under fault conditions such as the Crabtree or the Siemens 30Ma model.

2441 M.V. SWITCHBOARD AND SWITCHGEAR

The switchboard shall be manufactured in accordance with KS04 – 226 which co-ordinates the requirements for electrical power switchgear and associated apparatus. It is not intended that this K.S. should cover the requirements for specified apparatus for which Kenyan Standard exist. All equipment and material used in the switchboard shall be in accordance with shall be in accordance with the appropriate Kenyan Standard.

The switchboard shall comprise the equipment shown on the Drawings together with all current transformers, auxiliary fuses, labels, small wiring and interconnections necessary for the satisfactory operation of the switchboard.

Switchboard shall be of the flush fronted, enclosed, metal clad type with full front or rear access as called for in the particular specifications, suitable for indoors use, sectionalized as necessary to facilitate transport and erection. The

maximum height of containing all field terminals shall be provided at the top or bottom of the switchboard as appropriate.

Before manufacture, the Contractor shall submit to the consulting Engineer for approval of detailed Drawings showing the layout, construction and connection of the switchboard.

All bus-bars and bus-bar connections shall consist of high conductivity copper and be provide in accordance with KS 04 – 226: 1985. The bus-bars shall be clearly marked with the appropriate phase and neutral colours which should be red, yellow, blue for the phases and black for neutral. The bus0bars shall be so arranged in the switchboard that the extensions to the left and right may be made in the future with ease should the need arise.

Small wiring, which will be nearly arranged and cleated, shall be executed in accordance with B.S. 158 and the insulation of the wiring shall be coloured according to the phase or neutral connection.

Switches and fuse switches, shall be in strict accordance with KS 04 – 183: 1978 Class 2 switches. Means of locking the switch in the "OFF" position shall be provided.

All fuse switches shall comply with KS 04 – 183:1978, Part 2 and 3 a fault rating at least to the fault of the switchboard in which they are installed. Cartridge fuse links to KS 04 – 183: 1978 category A.C. 46, Class Q1 and fusing factor not exceeding 1.5 shall be supplied with each fused switch.

Mounting arrangements shall be such that individual complete fuse switches may be disconnected and withdrawn when necessary without extensive dismantling work. When switches are arranged in their formation all necessary horizontal and vertical barriers shall be provided to ensure segregation from adjacent units. Means of locking the switch in the "OFF" position shall be provided.

2442 STEEL CONDUITS AND STEEL TRUNKING

Conduits shall be of heavy gauge class"B" welded to Standard Specification KS 04-180 :1985. In no case will conduit smaller than 20mm diameter be used on the works. Conduits installed within buildings shall be black enameled finish except where specified otherwise. Where installed externally or in damp conditions they shall be heavy galvanized. Conduit fittings, accessories or equipment used in conjunction with galvanized conduit shall also be galvanized or otherwise as approved by the Engineer.

Metal trunking shall be fabricated from mild steel of not less than 18swg. All sections of trunking shall be rigidly fixed together and attached to the framework of fabric or the building at intervals of not less than 1.2m. Joint trunking shall not overhang fixing points by more than 0.5m.

All trunks fittings (i.e bends, tees, etc.) shall leave the main through completely clear of obstructions and continuously open except through walls and floors at which points suitable fire resisting barriers shall be provided as may be necessary. The inner edge of bend and tees shall be chamfered where cables larger than $35mm^2$ are employed.

Where trunking passes through ceiling and walls the cover shall be solidly fixed to 150mm either side of ceilings and 50mm either of walls.

Screws and bolts securing covers to trunking or sections of covers together shall be arranged so that damage to cables cannot occur either when fixing covers or when installing cables in the through.

Where trunking is used to connect switchgear of fuse boards, such connections shall be made by trunking fittings manufactured for this purpose and not by multiple conduit couplings.

Were vertical sections of trunking are used which exceed 4.5m in length, staggered tie off points shall be provided at 4.5m intervals to support the weight of cables.

Unless otherwise stated, all trunking systems shall be painted as for conduit.

Where a wiring system incorporates galvanized conduit and trunking, the trunking shall be deemed to be galvanized unless specified otherwise. The number of cables to installed in trunking shall be such as to permit easy Drawing in without damage to the cables, and shall in no circumstances be such that space factor of 45% exceeded.

Conduit and trunking shall be mechanically and electrically continuous. Conduit shall be tightly screwed between the various lengths so that they butt at the socketed joints. The internal edges of conduit and all fittings shall be smooth, free from burrs and other defects. Oil and any other insulating substance shall be removed from the screw threads. Where conduits terminate in fuse gear, distribution boards, adaptable boxes, non-spouted switchboxes, etc., they shall, unless otherwise stated, be connected thereto by means of smooth bore male brass bushes, compression washers and sockets. All exposed threads and abrasions shall be painted using an oil paint for black enameled tubing and galvanized tubing immediately after the conduits are erected. All bends and sets shall be made cold without altering the section of the conduit. The inner radius of the bend shall not be less than four (4) times the outside diameter of the conduit. Not more than two right angle bends will be permitted without the inter-position of a draw-in-box. Where straight runs of conduit are installed, draw-in-boxes shall ne provided at distances not exceeding 15mm. No tees, elbows, sleeves, either of inspection or solid type, will be permitted.

Conduit shall be swabbed out prior to Drawing in cables, and they shall be laid so as to drain of all condensed moisture without injury to end connections.

Conduits and trunking shall be run at least 150mm clear of hot water and steam pipes, and at least 75mm clear of cold water and other services unless otherwise approved by the Engineer.

All boxes shall conform to KS 04 – 668 :1986, to be of malleable iron, and black enameled or galvanized according to the type of conduit specified. All necessary boxes shall have threaded brass inserts.

Box lids where required shall be heavy gauge metal, secured by means of Zinc plated or cadmium plated steel screws.

All adaptable cables and lids of the same shall be interchangeable. Boxes used on surface work are to be tapped or drilled to line up with the conduit fixed in distance type saddles allowing clearance between the conduit and wall without the need for setting the conduit.

Where used in conjunction with mineral insulated copper sheathed cable, galvanized boxes shall be used and painted after erection.

Draw-in-boxes in the floors are generally to be avoided but where they are essential they must be grouped in positions approved by the Engineer and covered by the suitable floor traps, with non-ferrous trays and covers.

The floor trap covers are to be recessed and filled in with a material to match the floor surface.

The Contractor must take full responsibility for the filling of all covers, but the filling in material will be supplied and the filling carried out by the main Building Contractor.

Where buried in the ground outside the building the whole of the buried conduit is o be painted with two coats of approved bitumastic composition before covering up.

Where run on the surface, unpainted fittings and joints shall be painted with two coats of oil bound enamel applied to rust and grease free metalwork.

2443 TESTING ON SITE

The Contractor shall conduct during and at the completion of the installation and, if required, again at the expiry of the maintenance period, tests in accordance with the relevant sections of the current edition of the Regulations for Electrical Equipment of Building issued by the I.E.E. of Great Britain, the Government Electrical Specification and the Electric Supply Company's By-Laws.

a) Tests shall be carried out to prove that all single pole switches are installed in the "live" conductor.

Tests shall be carried out to prove that all socket outlets and switched socket outlets are connected to the "live" conductor in the terminal marked as such, and that each earth pins effectively bonded to the earth continuity system. Tests shall be carried out to verify the continuity of all conductors of each "ring" circuit.

b) Phase tests shall be carried out on completion of the installation to ensure that correct phase sequence is maintained throughout the installation. Triplicate copies of the results of the above test shall be provided within fourteen (14)

days of the witnessed tests and the Contractor will be required to issue to the Engineer the requisite certificate upon completion as required by the regulations referred to above.

c) any faults, defects or omissions or faulty workmanship, incorrectly positioned or installed parts of the installation made apparently by such inspections or tests shall be rectified by the contractor at his own expenses.

d) The contractor shall provide accurate instruments and apparatus and all labour required to carry out the above tests. The instruments and apparatus shall be made available to the Engineer to enable him to carry out such tests as he may require.

The contractor shall generally attend on other contractors employed on the project and carry out such electrical tests as may be necessary.

The contractor shall test to the Engineer's approval and as specified elsewhere in this specification or in the standards and regulations already refereed to, all equipment, plant and apparatus forming part of the works and before connecting to any power or other supply and setting to work.

Where such equipment etc. forms part of or is connected to a system whether primarily or of an electrical nature or otherwise (e.g air conditioning system) the contractor shall attend on and assist in balancing, regulating testing and commissioning, or if primarily an electrical or other system forming part of works, shall balance, regulate, test and commission the system in the Engineer's approval.

The contractor shall submit a completion certificate in the Kenya Power & Lighting Company for electricity connection and furnish copies of all test results mentioned in this section to the Engineer.

SECTION 25 – ENVIRONMENTAL, HIV/AIDS, COVID-19 MITIGATION MEASURES AND CROSS CUTTING ISSUES

2501 SCOPE

This specification sets out the Contractor's obligations with regard to on-site Environmental, HIV/AIDS and COVID-19 awareness campaign and preventive measures, which are to be instituted. The Contractor shall institute campaigns amongst his workers for the duration of the Contract.

- **Scope of Activities**

Activities for awareness campaigns and prevention will be broad-based,targeting both individuals and groups. They may consist of:-

(ii) Information posters in public places, both on and offsite (eating houses, bars, guesthouses, etc.) and on contractor's vehicles.
(iii) Availability of socially marketed condoms
(iv) Peer educators (reference people) drawn from the local labour and educated on the above issues for discussions with colleagues (estimate 1 per 100 employees).
(v) Small focus group discussions to disseminate information covering key issues.
(vi) Theatre groups and video presentations.
(vii) Promotional events to encourage openness and discussion of HIV/AIDS, COVID-19 pandemic, environmental and other cross cutting issues.
(viii) Promotional billboards to create awareness on the above issues. .
(ix) Availability of promotional materials such as T-shirts, caps, bumper stickers, keyrings etc.

- **Objective**

The Objective of the HIV/AIDS, COVID-19 and environmental training programme is to reduce the risk of exposure to the aforementioned diseases and to conserve the environment. The target group will be local labourers and their supervisors employed by the works contractors. The wider community will benefit indirectly through their normal day-to-day interaction with the target group.

2502 GENERAL REQUIREMENTS

(a) Publicity

(i) Posters

As part of the campaign the Contractor will be required to display awareness posters in all buildings frequented by workers employed on the Contract where such buildings fall under the control of the Contractor. In addition, at least ten (10) of The Contractor's vehicles, regularly used on site shall display the awareness posters. The posters shall be printed on gloss paper and shall be at least A1 size on buildings and A3 size, or other approved size on vehicles. The message on the posters to be proposed by the contractor shall be approved by the Engineer before the posters are printed.

The contractor shall be responsible for the maintenance and replacement of such posters during the contract period.

(ii) T-shirts and Caps

Contractor shall provide to be used by selected staff members continually duringthe contract period T-shirts and caps bearing messages approved by the Engineer.

(iii) Videos Shows

Contractor shall make arrangements for educative video shows at least every two (2) months during the contract implementation.
The videos shall be thoseapproved by the Ministry of Health for use in public awareness.

(iv) HIV/AIDS Awareness Road Signs

Contractor shall provide and erect HIV/AIDS awareness permanent road signs ofsurface area not less than $4m^2$ and not more than $5m^2$.

The specifications and payments for such signs shall be in accordance withSection 20 of both Standard and Special Specifications.

(b) Condoms

As part of the campaign the Contractor will be required to make condoms available to workers. The condoms shall be from those approved by the Ministry of Health (Kenya). The Contractor shall make available at least 2,000 male and 200 female condoms every month, through dispensing machines or other approved method of distribution. The Contractor shall at all times keep the site adequately supplied with such condoms during the contract period.

(c) Training

HIV/AIDS activities are co-ordinated nationally by the National Aids Control Council (NACC). The Contractor, in consultation with NACC and the Ministry of Health (MOH), will co-ordinate with the provincial, district and local representatives. In carrying out training of all staff involved in the construction activities. The trainers consisting of persons of different disciplines and being experts in AIDS and HIV issues shall include of at least 1 counsellor.

Activities on the construction site will be linked as far as possible with on-going HIV/AIDS awareness and prevention in the area. This will ensure complementarity of approaches, reinforcing education and minimizing duplication. In addition, these links will ensure that the target group will have access to continued information after the end of the construction period.
Activities on the construction site will be linked as far as possible with on-going HIV/AIDS awareness and prevention in the area. This will ensure complementarity of approaches, reinforcing education and minimizing duplication. In addition, these links will ensure that the target group will have access to continued information after the end of the construction period.

The training sessions shall cover among others the following:

(i) Preventive behaviours including partner reduction, condom use, awareness andappreciation of the importance of treatment of sexually transmitted incidences(STIs);

(ii) Skills including negotiating safer sex, correct condom use, purchase of condoms without embarrassment; and referral to local health centres and available services.

(iii) Establishing the status and focus of all current and planned HIV/AIDS activities in the area to ensure complementarity and determining potential involvement in project activities.

(iv) Carrying out a brief review of regional activities combining road constructionwith

(v) HIV/AIDS campaigns to determine options, best practice key issues, constraints etc.

(vi) Reviewing of Information, Education and Communication (IEC) materialsavailable and their relevance to road construction, making recommendations for futuredevelopment of IEC materials.

(vii) Providing education and training for site personnel, supervisors and peereducators for the scope of activities as above.

(viii) Providing supervision for peer educators to ensure sustained quality of education.Incentives for their continual work may be small promotional items such as T –shirts, Caps etc.

(ix) Providing mechanism for the social marketing of condoms and distribution ofmaterials.

(x) Monitoring activities regularly to assess effectiveness and impact. This shouldinclude an initial, interim and final assessment of basic knowledge, attitude and practices (KAP) taking account of existing data sources and recognizing the limitations dueto the short time frame to show behaviour change. The KAP will be supported byqualitative information from focus group discussions.

The training sessions shall be conducted once every two months during thecontract implementation.

(d) Timing

Activities shall commence at the start of the construction period and continue throughoutthe contract period to ensure a sustained impact.

2503 MEASUREMENT AND PAYMENTS

(i) Posters

Unit: Number (No.)

Payment: Payment rate for posters shall be by the Number (No.) placed orreplaced upon the instructions of the Engineer.

(ii)T-Shirts and Caps

Unit: A complete Set of T-Shirt and Caps (Set)

Payment: Payment rate for T-shirts and Caps shall be by the set of T-Shirts and Caps instructed by the Engineer.

(iii) Video Shows

Unit Number (No.)

Payment: Payment rate for video shows shall be the number (No.) of shows carried out. The rates shall include all the arrangements necessary to achieve the same.

(iv) Condoms

Unit: Number (No.)

Payment: Payment rates shall by the number of condoms provided by the Contractor. The rate shall include the provisions and maintenance of appropriate and approved dispensers.

(v)Training Unit: Session

Payment: Payment rate shall be by the number of sessions conducted. The rate shall include allowance payable, lunches, transport, tent hires, any public address systemetc necessary for conducting an effective public training

2504 ENVIRONMENTAL MITIGATION MEASURES

In order to minimise the negative effects on the environment during construction phase, the following issues and the corresponding mitigation measures have been recommended:

A Borrow pits and Quarries

Possible sources of materials will be identified and the sites investigated for material extraction. Materials sites (borrow bit areas) if not reinstated and rehabilitated after project completion, cause landscape scarring, dangers of overhanging cliffs and falling rocks which creates environmental, health and safety hazards, stagnant water pits where children and animals drown.

Land will be acquired for obtaining construction materials i.e. borrow pits and quarries.

Mitigation Measures

The Contractor is required carry out the following:

1. Ensure that appropriate authorisation to use the proposed borrows pits has been obtained before commencing activities by seeking approval from the National Environmental Management Authority before use of any active quarry site;

2. Carry out inspection of each of the site's soil stability before excavation;
3. All borrow pits sites shall be clearly indicated on a plan and approved by the Resident Engineer;

4. Borrow pits and quarries shall be located more than 20 meters from watercourses in a position that will facilitate the prevention of storm water runoff from the site from entering the watercourse;

5. The Contractor shall give 14 days' notice to nearby communities of his intention to begin excavation in the borrow pits or quarries;

6. Prepare health and safety plan before any work on the quarries is commenced;
7. Cordon off the quarry and borrow areas to keep livestock and children off;
8. Maintain fences and "make good" of the sites afterwards.
9. The Contractor shall prepare and implement borrow pit plans and borrow pit rehabilitation plans, which would minimise the risk of erosion.
10. Topsoil shall be stripped prior to removal of borrow and stockpiled on site. This soil shall be replaced on the disturbed once the operation of the borrow site or quarry is complete;

11. The use of borrow pits or quarries for material spoil sites may be approved by the Engineer (and/or with the appropriate consent of the "landowner"). Where this occurs, the materials spoiled in the borrow pit shall be profiled to fit into the surrounding landscape and covered with topsoil;

12. Decommission the borrow pits and quarries upon completion of the Contract and reinstate the land to its natural condition by grading excavations and planting suitable saplings.

B Air pollution

During construction there is going to be dust generated in these areas. Other possible sources of air pollution will arise from exhaust and engine emissions and construction machinery.

Air emissions including dust, is regarded as a nuisance when it reduces visibility, soils private property, is aesthetically displeasing or affects palatability of grazing. Dust generated by construction related activities must be minimised.

Mitigation Measures

a) Workers shall be trained on management of air pollution from vehicles and machinery. All construction machinery shall be maintained and serviced in accordance with the contractor's specifications;

b) Workers shall be trained on dust minimisation techniques;

c) The removal of vegetation shall be avoided until such time as clearance is required and exposed surfaces shall be re-vegetated or stabilised as soon as practically possible;

d) Do not carry out dust generating activities (excavation, handling and transport of soils) during times of strong winds. The Engineer shall suspend earthworks operations wherever visible dust is affecting properties adjoining the road;

e) Water sprays shall be used on all earthworks areas within 200 metres of human settlement. Water shall be applied whenever dust emissions (from vehicle movements or wind) are visible at the site in the opinion of the Engineer;

f) Vehicles delivering soil materials shall be covered to reduce spills and windblown dust;

g) Vehicle speeds shall be limited to minimise the generation of dust on site and on diversion and access roads;

h) Any complaints received by the Contractor regarding dust will be recorded and communicated to the Engineer;

i) Plants and all construction works should be undertaken strictly during business hours;

j) NEMA and the Ministry of Transport has published regulatory measures related to vehicle air pollution. It is anticipated that these measures will be adhered to and the law enforcers will take control;

k) Project-specific design improvements to limit motor vehicle air pollution impacts include:

i) The carriage way provides sufficient capacity to avoid traffic congestion, withprojected increases in traffic flow;

ii) Avoiding steep grades and sharp curves which would promote deceleration,acceleration and shifting wherever possible;

iii) Planting tall, leafy, and dense vegetation along the road to filter pollutants.

C Noise pollution

Road constructions generally require the use of machinery, and although these activities may be intermittent and localized, they nevertheless contribute tremendous amounts of sustained noise during equipment operation. These can degrade the human welfare and by disrupting noise sensitive areas like schools and hospitals.

Mitigation Measures

1. The Contractor shall keep noise level within acceptable limits and construction activities shall, where possible, be confined to normal working hours in the residential areas;

2. Schools, hospitals and other noise sensitive areas shall be notified by the Contractor at least 5days before construction is due to commence in their vicinity. Any excessively noisy activity shall be conducted outside of school hours, where approved by the Resident Engineer;
3. Construction workers will be required to wear ear muffs in areas exposed to excessive noise levels;
4. Equipment should be maintained regularly to reduce noise resulting from friction;
5. No unnecessary hooting by project and resident vehicles;
6. Any complaints received by the Contractor regarding noise will be recorded and communicated to the Engineer.

D Vegetation Loss

The proposed project roads will follow the old roads alignment during construction, only vegetation which, has encroached into the road reserve will be cleared to give way for the proposed road.

Mitigation Measures

1. Except to the extent necessary for establishing the construction site and carrying out the construction works, vegetation shall not be removed, damaged or disturbed nor should any unauthorised planting of vegetation take place;

2. The clearance of the site for construction purposes shall be kept to a minimum.
3. Areas to be cleared should be agreed and demarcated before the start of the clearing operations;

4. Clearing and removal of vegetation, especially at borrow sites must be carried out in such a way that damage to adjacent areas is prevented or minimised;

5. All vegetation encroaching into the road reserve must be cleared to give room for visibility;
6. Areas with dense indigenous vegetation are not to be disturbed unless required for construction purposes.

Measurement and Payments

No separate payment shall be made for this item. The Contractor shall include the costs in the rates for other measured items

E Impacts on soils and drainage

a. Storm water and Soil Erosion

It is expected on a properly improved road, there should be no problems of erosion or sedimentation because side drains, mitre drains, culverts and drifts are installed to effectively drain away any water.

Soil erosion is attributed to:

1. Run-off from unprotected steep slopes in the hilly areas;
2. Run-off from blockage of culverts or lack of drainage facilities;

3. Lack of scour checks on the side drains;

4. Poor drains in feeder roads.

Construction activities such as excavation and hauling of material from borrow pits and cuts for construction of embankments may also result in soil erosion.

Environmental protection measures on road works has two main benefits:

- It protects the road, thereby cutting maintenance costs, and
- It prevents off-road damage.

In terms of roadwork implementation, the contractor is responsible for ensuring that the protection measures as stipulated in the contract are carried out and that the required quality of work is provided.

Particular care is required where slopes have to be cut, fills made and drainage systems constructed. It is the contractor's obligation to protect slopes from erosion and to ensure that drainage outlets do not cause erosion

Mitigation Measures

1. Earthworks should be controlled so that land that is not required for the road works is not disturbed;
2. Wherever possible, earthworks should be carried out during the dry season to prevent soil from being washed away by the rain;
3. Excavated materials and excess earth should be kept at appropriate sites approved by the Supervising Engineer;
4. The earth dumping sites should be designed in such a manner as to facilitate natural water discharge;
5. The contractor should adhere to specified cut and fill gradients and planting embankments with shrubs and grass to reduce erosion and take care of stability problems of road embankments. Areas cleared for improving sight distance should be planted with grass to reduce erosion
6. The Contractor shall protect areas susceptible to erosion by installing necessary temporary and permanent drainage works as soon as possible and by taking measures to prevent the surface water from being concentrated in drainage channels or streams and from scouring slopes, use of check dams, soak pits and gabions;

7. Areas affected by construction related activities and/or susceptible to erosion must bemonitored regularly for evidence of erosion.
8. On any areas where the risk of erosion is evident, special measures may be necessaryto stabilise the areas and prevent erosion.

These may include, but not be limited to:
i. Confining construction activities;
ii. Using cut off drains;
iii. Using mechanical cover or packing structures such as geofabric to stabilise steep slopes or hessian, gabions and mattress and retaining walls;
iv. Mulch or chip cover;
v. Constructing anti-erosion berms;
vi. Where erosion does occur on any completed work/working areas, the Contractorshall reinstate such areas and areas damaged by the erosion at his own cost and to the satisfaction of the Engineer.

b. Drainage

Bridges (Reinforced Concrete, Composite) and pipe culverts are the only drainagestructures existing on the project road.
The project design has catered for the following to mitigate against drainage problems:
1. Cross drains will be used to replace some broken or damaged cross pipe culvertsthat by visual inspection appeared to overtop during floods.
2. Depending on the structural integrity some bridges/box culverts may be retainedbut extended.

<u>Mitigation Measures</u>
1. Where new culverts are to be installed, consultation with people settled there will be required to avoid possible conflicts that may arise due to channelling of water;
2. The Contractor shall ensure that provision is made to facilitate continuity of base water flow at all times during construction of these features across streams, rivers, lagoons and flood plains;

3. Reduction of baseline water quality through construction actions / activities shall beprevented (for example coffer dams, silt traps);
4. The Contractor shall not divert a dam or modify any watercourse without the approvalof the Engineer and relevant authorities as required by the law.

Measurement and Payments

The Engineer will instruct the permanent works related to this clause such as soil erosion measures and pay under the relevant bill items. No separate payment shall be made for theother items as the Contractor shall include their costs in the rates for other measured items.

F Impacts on water resources

a. Reduced water supply to local community

While the water sources within the project area are sufficient for the construction works, livestock and community domestic use, the concern is the water quality due to abstractionby the project works and its associated waste water management.

Mitigation Measures

1. The contractor should consult the community on partitioning of access to thisresource for construction purposes;
2. The Contractor must adhere to water quality regulations described in Legal NoticeNo. 120 of the Kenya Gazette Supplement No. 68 of September 2006.
3. Abstractions shall be approved by the Water Resources Management Authority.

b. Water contamination

This impact will only apply where the contractor will supplement labour based methods with substantial machinery for construction and where the contractor is to set up camp. Construction equipment generates large amounts of waste oil and its proper handling is critical. Haphazard storage and leakage can result in the contamination of soils, surface and ground waters.

Pollution of water resources by oil-based pollutants from lorries and construction machinery during construction works could cause health problems for the population. More-over it is a common practice for vehicles to be washed along the rivers and streams.

Mitigation Measures

1. The contractor should construct machinery and vehicle maintenance areas as well as sealed areas for the storage of pollutants so as to avoid any accidental discharge that would pollute water resources
2. Measures should be taken to ensure proper storage of fuel, oil and bitumen. Oil-water interceptors or sumps should be constructed to capture discharge of oils, fats and other polluting liquids from maintenance workshops, vehicle and equipment washing bays.
3. A safety and emergency response plan will need to be developed for all operations with emphasis on the protection of the environment prior to start up.

c. Water Sources and Springs

Riparian areas and other water sources along the rivers and streams along the road maybe contaminated during construction of the roads.

Mitigation measures

1. Rehabilitation of the existing water points, use of soak pits, stone pitching and check dams as velocity and siltation reducing measures of this water sources and springs
2. No construction materials shall be stockpiled within areas that are at risk of flooding;
3. The Contractor shall ensure that all construction activities at the seasonal river crossings are commenced and completed during the dry seasons (as far as possible);
4. All temporary and permanent fill used adjacent to, or within, the perennial river bed shall be of clean and or larger particles. Silts and clays shall not be permitted in the fill;
5. Plastic sheeting, sandbags or geofabric approved by the RE shall be used to prevent the migration of fines through the edges of the fill into the river;
6. The Contractor shall not modify the banks or bed of a watercourse other than necessaryto complete the

specified works. If such unapproved modification occurs, the Contractor shall restore the affected areas to their original profile;

7. The Contractor shall preserve all riparian vegetation;
8. The Contractor shall not pollute the watercourse or sources through any construction activities.

Measurement and Payments

No separate payment shall be made for this item. The Contractor shall include the costs in therates for other measured items

25-50-2-7 Contractor's camp site

The construction contractor will need to establish camps including site offices, workshops,stores, vehicle parking.

Mitigation Measures

The mitigation measures have been divided according to the different components of thecontractor's camp.

General

1. The site for the Contractor's Camp shall be determined in collaboration with the RE takinginto consideration the following:

i. The security situation in the area.

ii. The local administration shall be involved in the site location to avoid destruction ofany cultural sites or any other conflict;

iii. The Contractor's Camp layout shall take into account availability of access fordeliveries and services and any future works;

iv. The Contractor's Camp should also be of sufficient size to accommodate the needs ofall sub-contractors that may work on the project.

v. Decommission the camps and reinstate the land to its natural condition by fillingexcavations and planting suitable saplings.

Sanitation

1. The Contractor shall comply with all laws and any by-laws relating to public health andsanitation;

Workshops

1. Where practical, all maintenance of equipment and vehicles on site shall be performed in theworkshop.

2. If it is necessary to do maintenance on site, but outside of the workshop area, the Contractor shall obtain the approval of the Engineer prior to commencing activities;

3. The Contractor shall ensure that there is no contamination of the soil, vegetation or surface water in his workshop and other plant or emergency maintenance facilities.

4. The workshop shall be kept tidy at all times and shall have the following as a minimum:

i. A smooth impermeable floor either constructed of concrete or suitable plastic coveredwith sufficient gravel to protect the plastic from damage;

ii. the floor shall be bounded and sloped towards an oil trap or sump to contain anyspillages of substances (e.g. oil);

iii. Drip trays shall be used to collect the waste oil and lubricants during servicing andshall also be provided in construction areas for stationary plant (such as compressors);

iv. The drip trays shall be inspected and emptied daily;
v. Drip trays shall be closely monitored during wet weather to ensure that they do notoverflow.

General Materials Handling and Storage

1. All materials shall be stored within the Contractor's camp unless otherwise approved by the Engineer;

2. All imported fill, soil and/or sand materials shall be free of weeds, litter and contaminants. Sources of imported materials shall be listed and approved by the Engineer

3. The Contractor shall ensure that delivery drivers are informed of all procedures and restrictions (including 'No go' areas) required;

4. Any electrical or petrol driven pumps shall be equipped and positioned so as not to cause anydanger of ignition of the stored product;

5. Collection containers (e.g. drip trays) shall be placed under all dispensing mechanisms for hydrocarbons or hazardous liquid substances to ensure contamination from any leaks is reduced;

6. Regular checks shall be conducted by the Contractor on the dispensing mechanisms for all above ground storage tanks to ensure faulty equipment is identified and replaced in timely manner;

7. Only empty and externally clean tanks may be stored on bare ground. All empty and externally dirty tanks shall be sealed and stored on an area where the ground has been protected.

Measurement and Payments

No separate payment shall be made for this item. The Contractor shall include the costs in therates for other measured items

25-50-2-8 Solid Waste

Construction will result in the creation of various solid wastes, principally surplus earth (spoil)and rock (soil debris), office wastes including.

Mitigation Measures

1. The contractor should develop a waste management plan;
2. All personnel shall be instructed to dispose of all waste in a proper manner;
3. At all places of work the contractor shall provide litter collection facilities;
4. The final disposal of the site waste shall be done at the location that shall be approved by the Engineer, after consultation with local administration and local leaders;

5. The provision of sufficient bins (preferably vermin and weatherproof) at the camp and work sites to store the solid waste produced on a daily basis;

6. Wherever possible, materials used or generated by construction shall be recycled;
7. Provision for responsible management of any hazardous waste generated during the construction works;

8. Dispose of surplus material ("spoil") only at designated sites and by approved methods.
9. The spoil area should preferably be located on land already cleared wherever possible. Communities shall be involved in the site location to avoid destruction of any ritual site or any other conflict;

10. The development and rehabilitation of spoil areas.

Measurement and Payments

No separate payment shall be made for this item. The Contractor shall include the costs in therates for other measured items

Liquid wastes

a. Wastewater and Contaminated Water Management

During the construction phase, various liquid wastes including grey and black water (respectively washing water and sewage), concrete washings, runoff from camp and workshop areas, and various liquid waste streams from washing construction vehicle and equipment washing will be generated.

Mitigation Measures

1. No grey water runoff or uncontrolled discharges from the site/working areas
2. Water containing such pollutants as cements, concrete, lime, chemicals and fuels shall bedischarged into a conservancy tank for removal from site.

3. The Contractor shall also prevent runoff loaded with sediment and other suspended materialsfrom the site/working areas

4. Potential pollutants of any kind and in any form shall be kept, stored and used in such amanner that any escape can be contained and the water table not endangered;

5. Wash areas shall be placed and constructed in such a manner so as to ensure that thesurrounding areas (including groundwater) are not polluted;

6. The Contractor shall notify the Engineer of any pollution incidents on site.

b. Fuels, Oils, Hazardous Substances and other Liquid Pollutants

The construction phase will involve the use of stationary and mobile plant and equipmentrequiring refuelling and the construction of permanent and temporary fuel storage facilities.

Mitigation Measures

1. Hazardous materials shall not be stored within 2 kilometres of the top water level of publicwater supply reservoirs;
2. Hazardous materials shall be stored above flood level and at least 20 metres from anywatercourse;
3. Areas for the storage of fuel and other flammable materials shall comply with standard fire safety regulations;
4. Chemicals and fuel shall be stored in storage tanks within a secure compound.

5. Storage areas or secondary containment shall be constructed of waterproof reinforcedconcrete or approved equivalent
6. The minimum volume for secondary containment shall be 110% of the capacity of the largest tank system, plus 10% of the total capacity of all other separate tanks and containerswithin the bund wall with closed valves for controlled draining during rains;
7. Tank equipment such as dispensing hoses, valves, meters, pumps, and gauges shall belocated within the containment or provided with own containment;
8. Fence of the tank compound with locks or other adequate security controls at the site;

9. Locks on unattended dispensing hoses;

10. Appropriate training for the handling and use of fuels and hazardous material

11. Extreme care will be taken when transferring chemicals and fuels from storage vessels toequipment and

machinery on an impervious sealed area which is kerbed and graded to prevent run-off

12. All chemicals stored within the bunded areas shall be clearly labelled detailing the natureand quantity of chemicals within individual containers;

13. Any chemical or fuel spills shall be cleaned up immediately. The spilt liquid and clean-upmaterial shall be removed, treated and transported to an appropriate site licensed for its disposal;

14. Stormwater shall be diverted away from the fuel handling and storage areas. An oil waterinterceptor shall be provided to treat any rainwater from fuel storage and handling areas.

c. Concrete Batching (Where applicable)

This is principally a labour based gravel surfaced works and concreting works may berequired, e.g. for drainage structures

Mitigation Measures

1. Concrete batching plant shall be located more than 20 m from the nearest stream/riverchannel;
2. Topsoil shall be removed from the batching plant site and stockpiled;
3. Concrete shall not be mixed directly on the ground;
4. The concrete batching works shall be kept neat and clean at all times;
5. Contaminated stormwater and wastewater runoff from the batching area and aggregate stockpiles shall not be permitted to enter streams but shall be led to a pit where the watercan soak away;
6. Unused cement bags are to be stored so as not to be effected by rain or runoff events;
7. Used bags shall be stored and disposed of in a manner which prevents pollution of thesurrounding environment (e.g. via wind blown dust);
8. Concrete transportation shall not result in spillage;
9. Cleaning of equipment and flushing of mixers shall not result in pollution of thesurrounding environment;
10. Suitable screening and containment shall be in place to prevent wind blown contamination associated with any bulk cement silos, loading and batching;
11. Waste concrete and cement sludge shall be scraped off the site of the batching plant andremoved to an approved disposal site;
12. All visible remains of excess concrete shall be physically removed on completion of the plaster or concrete and disposed at an approved disposal site. Washing the remains into theground is not acceptable;
13. All excess aggregate and sand shall be removed

Measurement and Payments

No separate payment shall be made for this item. The Contractor shall include the costs inthe rates for other measured items

25-50-002-10 Disruption of Access to Property

The road construction may lead to disruption of access to property.Mitigation Measures

Disruption of access to property must be kept to a minimum at all times. Where such disruptionis unavoidable, the Contractor shall advise the affected parties and the Engineer at least seven working days in advance of such disruption.

G Relocation of public utilities

Road construction could lead to disruption of existing utilities. This includes water pipes and electricity lines. However, this will be temporary as the contractor will relocate the services tothe edge of the road reserve.

These interruptions will be of a short time but may lead to disturbances and inconveniences.

Mitigation Measures

1. Notice should be given to the utility users prior to any interruption in supply;
2. Liaise with relevant parties which include water service institutions and KPLC.25-50-002-12 Delays in transportation

During construction phase, the road traffic will be controlled and in some cases complete road closure will be necessary. This will entail disruption to traffic flows resulting in delay to transportof people and goods.

Mitigation Measures

1. To avoid delays to road users, the contractor will be required to plan itineraries for site traffic on a daily basis. Traffic management and control is mandatory throughout the project;

2. Temporary road signs that are visible both during the day and at night indicating road works and restrictions will be required, as detailed in section 9 of the specifications;

3. The contractor should also set aside footpaths, cycle lanes and parking bays for heavy goods vehicles and public transport vehicles;

4. Areas where construction is taking place should have clearly marked speed reduction signage.

Measurement and Payments

Traffic Control will be paid under item 09-50- 004, No separate payment shall be made for the other items. The Contractor shall include the costs in the rates for other measured items.

J Disruption of Community

All construction activities may cause disturbance to the community around the area. Managing the welfare of a significant number of workers is inevitably a major challenge, and the co- existence of multiple contractor crews of workers from diverse ethnic and geographic backgrounds can be problematic.

Mitigation Measures

1. The Engineer is to establish a formal grievance and redress mechanisms.

2. The Contractor will be required to minimise the risk of grievances with the localcommunities.
3. Where grievances occur, the Contractor will be required to assist in the process to investigateand resolve the grievance as effectively and quickly as reasonable;
4. The Contractors shall keep a 'Complaints register' on Site. The register shall contain:

i. All contact details of the person who made the complaint and information regarding thecomplaint itself;
ii. The investigations undertaken and response provided;

iii. Actions taken and by whom;

iv. Any follow-up actions taken.

5. Copies of complaints received are to be copied to the Engineer, and where pertinent.Measurement and Payments

No separate payment shall be made for this item. The Contractor shall include the costs in therates for other measured items

K **Site Security**

It is expected that the Contractor will make arrangements for security of its properties,equipment and worker's

Mitigation Measures

1. The Supervising Engineer and Contractor in liaison with the security organs must createawareness to the security situation on the ground all the times;
2. Appropriate fencing, security gates, shelter and security guards are to be provided at the Construction
3. The Contractor must ensure that good relations are maintained with local communities andtheir leaders to help reduce the risk of vandalism and theft;
4. Site staff that are found to be involved in incidences of theft or pose other security risks tothe local community are to be dismissed and reported to the authorities.

Measurement and Payments

No separate payment shall be made for this item. The Contractor shall include the costs in therates for other measured items

25-50-2-15 Fire Incidences

Fire is an inherent risk in any construction which might lead to loss of property and sometimesloss of life.

Mitigation Measures

1. The Contractor shall ensure there is control of potential fire ignition points;
2. The Contractor shall ensure that there is basic fire-fighting equipment available on site;
3. Flammable materials should be stored in approved conditions
4. Smoking shall not be permitted in those areas where there is a fire hazard.
5. The Contractor shall ensure that all site personnel are aware of the fire risks and how to dealwith any fires that occur.

Measurement and Payments

No separate payment shall be made for this item. The Contractor shall include the costs in therates for other measured items

2505 HEALTH AND SAFETY MEASURES ON SITE

The Contractor shall ensure that all possible means of protection are given to the labour force at all times. Such protection shall include provision of high visibility clothing or vests, goggles and masks for workers in potentially dangerous locations or dealing with potentially harmful materials.

The following Safety Measures should be adhered to:

- First aid kits must be available on site, a qualified first aider should be on site during theworking time and the Site Supervisor should also be conversant with first aid procedures.The Contractor shall maintain first aid kits with a minimum of the following items:-
  - Non Stick wound dressing
  - Selection of plaster/band aids
  - Crepe bandages
  - Gauze and cotton wool
  - Antiseptic solution (washing wounds)
  - Antiseptic cream – Betadine, Burnol
  - Pain killers Panadol, Disprin
  - Anti diarrhoea – Immodium, Diadis, Charcoal, diastop or approved brand

- Anti histamine – Piriton, Triludan
- Anti nausea – Stemetil
- Eye ointment
- Oral re-hydration sachets
- Surgical gloves

- Protective goggles for stone cutting, chiselling, grinding, and welding.
- Face masks when working in dust and smouldering waste.
- Helmets when working on sites where there is a danger of falling objects, e.g. in deepdrains, digging pit latrines, work in quarries, etc.
- The Site Supervisor should also know where the nearest hospital / clinic is and where anambulance or quick transport can be found.
- Special safety measures are required when deep trenches have to be dug, for example forculverts or structures. Depending on the material (natural soil slope) and the depth of thetrench, strutting will be required to avoid collapsing trench sides. The construction of strutting has to be done carefully and requires an experienced builder.
- No alcoholic drinks or drugs during work.

Quality Control
No worker will be assigned works without protective clothing; a percentage of the payment willbe deducted whenever the Engineer or his representative finds a worker without protective gear.

Payment
50% of the Lump Sum payment for this item will be made when the contractor mobilises and provides all items as required by this clause, 25% will be paid when the works are 50% completeand the remaining 25% upon final completion.

2506 GENDER EQUALITY
According to constitutional law of the Government of Kenya, women and men have the samerights and responsibilities which are to be ensured at all levels and in all aspects of daily life.

It is therefore the obligation of Contractor to ensure that gender equalisation is achieved in all aspects of contract works. That means women should get equal opportunities with men and therecruitment process must clearly demonstrate this. Opportunities for employment should also beoffered to disabled people. Special activities that they can carry out have to be identified and allocated to them.

Measurement & Payments
No separate payment shall be made for this item but the Contractor will be expected to complyfully with the requirements of this clause.

2507 LABOUR STANDARDS
It is an obligatory duty of the construction sector to maintain the international labour standards,as Kenya is one of the signatories of the International Labour Conventions of the InternationalLabour Organisation (ILO). The contractor should observe the following requirements:

Equality:
- Men and women should receive equal pay for work of equal value.
- Persons should be given equal opportunity and treatment in employment;

There should be no discrimination against persons in their employment and occupation on the basis of their race, colour, sex, religion, political opinion, national extraction or social origin, oron any other basis set out in

new constitution.

Freedom from forced labour:

• Work or service should not be exacted from any person under the menace of penalty or undercircumstances where the person has not offered himself or herself voluntarily.

• Work or service should not be exacted from any person:
- As a means of political coercion;
- As a method of mobilising and using labour for purposes of economic development;
- As a means of labour discipline;
-As a means of racial origin,
- Social, national or religious discrimination.

Freedom of association:

All steps to be taken to protect, respect and promote workers and community's rights of association

Minimum age:

No person under the age of 18 years should be employed or work

Minimum wages:

Minimum wages should be established for groups of wage earner, in consultation with employers andLabour Department and workers' organizations;

Protection of wages:

Wages should be paid in cash money. Workers should be informed of any deduction made from wages,and national regulations should set down condition for deductions from wages. Wages should be paid regularly at or near the place of work.

Before recruitment, adequate notice should be given and the notices posted in public places such asschools, chief's office and churches in order to reach as many people as possible.

During recruitment, the information on the number of jobs available and terms of employment (pay rates, timing and arrangements for payment including first payment date), should be disclosed openly. The recruitment process should be conducted in transparent manner without biases or any discrimination.

The unskilled labour is supposed to be sourced from the project area apart from specialised personnel like craftsmen and technicians who may be hired from elsewhere if they cannot be found in the projectarea.

Measurement & Payment

No separate payment shall be made for this item; the Contractor will be expected to comply fully withthe requirements of this clause.

SECTION 26: LAND ACQUISITION, AXLE LOAD CONTROLS, AND RELOCATION OF SERVICES

2601 LAND ACQUISITION

The execution of this section shall be in accordance with Section 124 and 141 (J) of the Standard Specifications for Road and Bridge. The acquisition shall exclusively be only for areas required for road construction that have been confirmed to fall outside the authentic available road reserve as given in the Registry Index Maps (RIMs). The land acqusition process shall be guided by the prevailing Land Act. All the processes necessary for land acquisition shall be the responsibility of the Employer.

Where additional corridor is required for the construction of outfall drains and other drains, the Engineer may recommend to the Employer easement agreements with land owners. Such agreements shall be registered with the Registrar of Lands or any other Government Agency mandated by law. In case land owner is not agreeable to easement proposals, then other alternative land acquisition procedures shall be invoked if it is deemed that such corridors are necessary for proper construction and completion of the road.

2602 AXLE LOAD CONTROL

Pursuant to Section 2.1.1 of the General Conditions of Contract, the Contractor shall be responsible for axle load management over the entire period the project road shall be in their possession. The Contractor shall make arrangements for traffic axle load control including but not limted to measurement of axle loads, liaison with the enforcement agencies and preparation and submission of quarterly reports to the Engineer. The enforcement shall be guided by the prevailing traffic law.

The Contractor shall be deemed to have included the cost of axle load control management in their rates and no separate payments shall be made for this item.

2603 RELOCATION OF SERVICES

The execution of this section shall be in accordance with Section 121 of the Standard Specifications for Road and Bridge Construction and the Roads Act 2007, or any other Act of Parliament as may be applicable.

The Contractor shall aquaint himself with the location of all the existing services such as telephone lines, electricity cables, water pipes, sewer systems etc, befor execution of any works that may affect the services. The cost of determining the location of the existing services together with making good or repairing any damage caused all to the satisfaction of the Engineer, shall be included in the bid rates.

In case of any damage to the existing functional service lines by the Contractor during the execution of the works, the Contractor shall obtain permission from the competent authority/owner for the repair of the same. The Contractor shall carry out all the necessary work in such a manner and at such times as may be approved by such authority/owner. The cost of the repairs, and all things connected therewith shall be paid for by the Contractor. The Contractor shall indemnify the Employer against claims originating from damage to the existing services.

Where a service provider has confirmed in writing to the Engineer their inability to meet the cost of relocation

as required in the Roads Act, the Engineer may upon confirmation of the same, forward the request of the service provider to the Employer with recommendations. Considerations under this recommendation shall take into account whether the services are functional or not. The relocation costs shall be limited to the provision of same or similar material or its equivalent to the extent possible.

The payment shall be as provided for in the bills of quantities.

SECTION 27: PERFORMANCE BASED ROUTINE MAINTENANCE WORKS

2701 NOTICE TO BIDDERS

This section deals with the implementation of maintenance works after the **end of Defects Liability Period** under the Performance Based Routine Maintenance type of Contract. The maintenance will be carried out for a period of **Six (6) Months)**. During the second and the third year after completion of improvement works, the contractor will be required to carry out instructed works.

This type of contract differs substantially from the traditional contracts for road maintenance works in that most of the payments to be made to the contractor are not based on quantities of works measured by unit prices for works inputs, but on measured 'outputs' reflecting the target conditions of the roads under contract (in other words: 'what the roads are supposed to look like'), expressed through '**Service Levels'**. Another major difference is that the Contractor is responsible for designing (deciding on) the works necessary to reach the required Service Levels, and the durability and performance of the roads over a longer period.

For example, the contractor is not paid for removing 2 cubic metres of silt from a culvert (his actual work input) in a certain month, but for keeping the culvert clean and free of silt at all times (the output of his efforts). This means that in some months he will be paid the agreed standard monthly lumpsum amount even though he has not had to do much work. In other months he might have to do a lot of work but he will still only be paid the agreed standard amount. However, if he fails to meet the Service Levels by, for example, allowing a culvert to become silted up, he will have a reduction made from his monthly lump sum.

The Service Levels are defined in the Contract and so is the method of calculating the payment reductions for non-compliance. It is intended that the contractor is motivated to do good quality work so that he reduces his maintenance burden, and therefore his costs, over the duration of the contract. If he does shoddy work he will have to repeat it and this will increase his maintenance inputs and costs. He must decide how best to plan and execute the works in order to make his operations cost effective.

In this particular contract this method of payment, based on Service Levels, applies mainly to the '**off-carriageway'** Routine Maintenance.

There is provision in the contract for repairs and maintenance works 'on-carriageway' and for emergency works that may have to be carried out from time to time, but these activities are paid for using the traditional method of measuring quantities of input items, and rates, given in the Bills of Quantities.

Another important aspect in the Performance type of contract is for the contractor and employer to enter into a long-term relationship whereby the contractor takes over more responsibility for managing the condition of the road and is rewarded by a longer-term contract than is traditional; sometimes several years.

2702 DESCRIPTION OF PROJECT ROAD

The road is located in **Township Constituency of Garissa County:**

The project area experiences moderate rainfall. The roads run through undulating terrain.
The main economic activity is **livestock keeping.**

2703 SCOPE OF WORKS

- Designing and carrying out 'off-carriageway' routine maintenance of the drainage system, including drainage and erosion control structures, and the control of vegetation, in order to achieve the Service Levels defined in the Specifications.
- Carrying out activities 'on-carriageway' in order to achieve the Service Levels for cleanliness and safety as defined in the Specifications.
- Repairs and routine maintenance of the paved surface, as directed by the Engineer.
- Repairs and routine maintenance of the roads signs, safety barriers and other road furniture, as directed by the Engineer.
- Carrying out emergency works, as directed by the Engineer.

2703 (a) Specifications- Performance Based Works

The services to be provided by the Contractor include all activities, physical and others, which the Contractor needs to carry out in order to comply with the Service Levels and other output and performance criteria indicated in the contract, or with any other requirements of the contract. In particular, they include management tasks and physical works associated with the following road-related assets and items:

- Inspect road, identify and remove all obstructions
- Clear side drains, mitre drains, cut-off drains
- Repair and replace scour checks
- Repair eroded ditches
- Clean cross culverts, access culverts, outlets and inlets
- Headwall repairs
- Clear stream channels
- Vegetation control: grass slashing, bush clearing, tree pruning
- De-silt drifts
- Maintenance and minor repairs to bridges.

Performance based routine maintenance services will be paid for as a fixed **lump sum per km per month, with payment reductions made for non-compliance**, if appropriate.

H Timetable for Compliance with Service Level Requirements

In order to respect the Contractor's initial mobilization period, compliance with the service levels will be introduced gradually as shown in Table 26.1.

Table 27.1 Timetable for Compliance with Service Level Requirements

Contract Month	**Road Safety** Compliance required on % of contract road	**Durability** Compliance required on % of contract road
1	50	50
2	100	75
3	100	100
4 until end of Contract	100	100

I Specification for Service Levels for Road Safety

The road user must be able to travel at a certain level of safety, unobstructed by objects, wash- out material and other debris on the gravel wearing course and shoulders. The criteria for determining the service levels for safety are given in Table 26.2. The enforcement of these criteria is expected to be an immediate priority of the contractor due to the critical importance of road safety, and 100% compliance is expected from Month 2, as shown in the Timetable in Table 26.1. Compliance will be determined by Visual Inspection.

Table 27.2 Service Levels for Road Safety

Item	**Service Level**	**Time Allowed**
Cleanliness of the road gravel surfacing and shoulders	The road must always be clean and free of soil, debris, trash and other objects, which must be removed within the time given if they pose: l) A high danger to traffic: such as rocks, fallen trees, dead animals, abandoned vehicles, fly tipping and other large obstacles etc: m) A lesser (medium) danger to traffic: such as material washed on to the road after storms etc:	6 hours 1

J : Specification for Service Levels for Road Durability

K: Drainage

In general terms the contractor must ensure that all drainage elements and structures are without obstructions which may reduce their normal cross-section and impede the free flow of water.

The Service Level requirements for drainage systems and drainage structures are shown in Table 26.3. Compliance will be determined by Visual Inspection.

Table 27.3 Service Levels for Drainage

Item	Service Level	Time Allowed for Repairs and Tolerances Permitted
Side drains, ditches, mitre drains and unlined vertical drains	Must be clean and free of obstacles	Tolerance permitted: Siltation/Obstructions must less than 50mm in depth. Siltation/Obstructions must be cleared within 7 days after detection. Damages must be repaired within 3 weeks after detection.
Culverts and access drifts	Must be clean and free of obstacles and without structural damage. Must be firmly contained by surrounding soil or material.	As above
Scour checks and other erosion protection structures	Must be de-silted, structurally sound and firmly contained in surrounding soil or material.	As above

A Vegetation

This section specifies the Service Levels to be complied with in the case of vegetation growing within the right-of-way/ road reserve.

Vegetation is to be controlled to the heights, at the locations and with the restrictions as set out in Table 26.4. Compliance will be measured with a tape measure.

Table 27.4 Vegetation Control Types

Type	Height (mm)	Features applied to:
1. Vegetation Free Zone.	0	Carriageway, shoulders and structures.

2. Inner vegetation zone: from edge of shoulders to back of side drain/ditch or 2m away from edge of shoulder on straights and outside of curves, and 5m on the inside of curves. Also control of vegetation around street furniture and other features.	25 (min) to 150 (max)	Road verges and large vegetated areas, including surface water channels with longitudinal gradients ≥ 3%. Also vegetation control around: 7. Marker posts 8. Signposts 9. Bridge and culvert markers 10. Guardrails 11. Bridge abutments 12. Cross culvert ends and headwalls 13. Inner side drains
3. Outer vegetation zone, excluding zone 2.	50 (min) to 300 (max)	Bush clearing and vegetation control around: 7. Marker posts 8. Access culvert ends and headwalls 9. Outer side drains 10. Channels with gradients ≤ 3%.
4. Growth encroaching into Vegetation Free Zone from the side or top.	Must be removed if within 5m above the road surface.	Applies to vegetation control including trees, scrub or branches hanging over the zone.

B Structures

The Contractor is responsible for the routine maintenance of all bridges, retaining walls and similar structures along the contract road.

The Service Levels for bridges, retaining walls and similar structures are given in Table 2.6.3 below. Compliance will be determined by Visual Inspection.

Table 27.5 -Service Levels for Structures

Item	Service Level	Time allowed for repairs or Tolerance permitted
Steel or other metal structures	***Guardrails must be present and not deformed. All metal parts of overall structure shall be painted or otherwise protected and free of corrosion. Drainage***	Contractor must immediately notify Engineer in case of any condition which threatens structural integrity of the structure. Damage and defects must be repaired within seven (7)

Table 27.6 -Service Levels for S tructures		
Item	**Service Level**	**Time allowed for repairs or Tolerance permitted**
	system (e.g. weep holes) to be kept in good condition and fully functional.	days.
Concrete structures	***Guardrails must be present and painted. Beams and all other structural parts must be in good conditions and fully functional. Drainage system (e.g. weep holes) in good condition and fully functional.***	Contractor must immediately notify Engineer in case of any condition which threatens structural integrity of the structure. Damage and defects must be repaired within seven (7) days.
Expansion joints	Clean and in good condition	***Damages and defects must be repaired within seven (7) days.***
Retention walls	Contractor must control presence and adequate condition of retention walls and their drainage.	***Damage and defects must be repaired within seven (7) days.***
Riverbeds	Contractor must ensure free flow of water under bridge and up to 50 metres upstream and downstream. Contractor must maintain design clearance under bridge. The Contractor shall take all reasonable measures to control erosion around bridge abutments and piers.	***Causes for non-compliance must be eliminated within fourteen (14) days after water has sufficiently receded to allow minimum working conditions.***

2703(b): Repairs and Maintenance Works

Repairs and Maintenance works will be carried out by the Contractor when specifically instructed by the project manager. Activities include:

1. Fill potholes and minor gullies in the gravel wearing course and shoulders
2. Repair carriageway edges
3. Reinstate road camber
4. Road furniture maintenance and repair
5. Repairs to culverts, replacing rings etc

Repairs and maintenance works will be paid for as measured items in accordance with the unit rates in the Bill of Quantities.

2703 (c): Emergency Works

Emergency works, by definition, are unforeseen at the time of preparing the contract. Severe weather conditions such as unusually high rainfall can lead to flash floods which may cause wash-outs and other damage to the carriageway and other features of the road and its corridor. While specific items of work are not known at the start of the Contract it is prudent to include some general items which are indicative of the type of works that may be required. These have been included in the Bill of Quantities for Repairs, Maintenance and Emergency Works as they will probably be the same items, e.g. repairs and maintenance under an emergency situation. The quantities are nominal as they cannot be defined in advance.

In the event of an emergency the Contractor should draw to the attention of the Engineer that certain works need to be carried out to repair the carriageway and other road features to restore the safe passage of traffic along the road and ensure the integrity of the road and its corridor. The Contractor shall give the Engineer an estimate of the extent of the required activities and an estimate of the costs based on the Bill of Quantities. The Engineer will consider the information and instruct the Contractor to carry out such works as are necessary.

Emergency works will be paid for as measured items in accordance with the unit rates in the Bill of Quantities. The instructed works will be done in according with the following specifications:

c. The General Specification for Roadworks is the Standard Specification for Road and Bridge Construction, Ministry of Transport and Communications, 1986.

d. The Special Specification in the Standard Tender Documents for Procurement of Small Works -KeRRA/ Ministry of Roads, November 2009.

2704: SELF-CONTROL UNIT OF CONTRACTOR

The Contractor is obliged to assign a technically qualified and trained person, or persons, to verify continuously the degree of their compliance with the Service Levels.

The Self-control Unit is responsible for gathering the information needed by the Contractor to prepare the Monthly Statement. The unit should have a complete knowledge of the road condition, both on and off carriageway, at all times. The unit will also be responsible for carrying out, in close cooperation with the Engineer, the formal and scheduled inspections of Service Levels which will take place regularly.

The compliance (or non-compliance) of the Contractor with the service level requirements will be reported by the Self-Control Unit to the Engineer in the form of Table 26.3, given below.

2705: Site Regulations, Health and Safety Measures and Work Procedures

The Contractor shall prepare and submit to the Engineer, for approval, his proposed site regulations, health and safety measures (including HIV/AIDS mitigation measures) and work procedures.

2706: Functions of Key Personnel

The Contractor will provide as a minimum the following permanent key personnel:

- Project director – the owner, director or senior manager of the company to oversee all contractual and operational functions of the contract.
- Site Supervisor-to head the self-control unit and direct and oversee the day-to-day planning and site operations of the contract including staff and public safety issues, the free flow of traffic, liaising with the public and reporting to the Engineer. He will also decide what works have to be carried out and supervise the labour force to ensure quality and adherence to the service levels, as well as the duties described in **26-50-005**.

The roles could be done by the same person, depending on the size of the firm.

2707: Method of Formal Inspections

Formal inspections will be carried out jointly by the Engineer and the Road Manager at the end of each month. The main purpose of the formal inspections is to enable the Engineer to verify the information presented in the Contractor's Monthly Statement with the actual observed and measured conditions on the site. The Engineer will prepare a brief Memorandum describing the following:

1. The general circumstances of the site visit, including date, road sections visited, persons present, etc.;
2. Any non-compliance which may have been detected;
3. The time granted by the Engineer to the Contractor to remedy the detected defects. Based on the outcome of the formal inspection, the Engineer will correct any possible errors or misrepresentations in the Contractor's statement, countersign it and present it to the Employer for payment, and to the Contractor for information.

Formal inspections will also be scheduled for the follow-up site visits, whose purpose is to verify if the Contractor has remedied the causes of earlier non-compliance, within the time frame granted by the Engineer and specified in the Memorandum.

2708: Informal Inspections of Service Levels

The Engineer may carry out informal inspections of Service Levels as part of his general mandate given to him by the Employer. He may do so on his own initiative, at any time and anywhere on the roads included in the contract. If he detects any road sections where the Service Level criteria are not met, he is obliged to inform the Contractor within 24 hours in writing, in order to enable the Contractor to take remedial action as soon as possible. The results of informal inspections may not be used by the Engineer for purposes of correcting the Contractor's monthly statements or applying penalties, except for cases in which the traffic flow on the road has been completely interrupted.

2709: Monthly Statement

The Monthly Statement to be submitted by the Contractor shall have the format shown in Table 26.6, which gives an example of how the statement is filled out. The compliance or non- compliance is reported in the table and is used to determine the degree of compliance and the payment reduction to be made in a particular month.

Table 27.7 Monthly Statement for Contract (Sample Only)

Road Section: From km: 5.00 To km: 25.00 Length of contract road: 20.00 km

District: Nyandarua Region: Central

Contract Month: 2, October 2010

Service Level	Required Compliance		Actual Compliance		Non-compliance		Payment
Criteria	Target	km	Compliance criteria	Total Length (km)	Length	% Reduction	Reduction
				Compliant			km
1. Road Safety	100%	20.00	Cleanliness of carriageway	18.00	2.00	20%	0.40
2. Durability	75%	15.00	Drainage	13.00	2.00	30%	0.60
	75%	15.00	Vegetation height	13.00	2.00	20%	0.40
	75%	15.00	Vegetation clearance	13.00	2.00	10%	0.20
	75%	15.00	Structures and river beds	13.00	2.00	20%	0.40
						Total	2.00

Length of road for payment this month = 'Length of contract road' minus 'Payment reduction length'

= 20.00 - 2.00 = 18.00 km

Less reductions for non-rectified previous non-compliance (Tab = 18.00 - 1.00 = 17.00

2.8)

		'Rate per km per month'			
Total payment due this month	=	multi plied by		'Length of road for p	ayment this month'
	=	? Ksh/km	x 17.00	km	
	=	??	Ksh		

2710: Procedures for Inspection

The visual inspection will be undertaken as part of the Formal and Informal inspections. The criteria for Service Levels will be checked at sections selected by the Engineer based on visual appearance. The Engineer shall be the sole judge of compliance. If a specified criterion is not met, the one-kilometre section in which the deficit occurs will be judged non- compliant**.**

2711: Payment Reductions and Liquidated Damages

In accordance with the relevant clauses of the Conditions of Contract, Payment Reductions are applied in case of non-compliance with Service Level requirements, while Liquidated Damages are applied in the case of non-compliance with required Repair, Maintenance and Emergency Works.

The results of each formal inspection of the Service Levels and other performance criteria will be recorded by the Engineer in the form of a Memorandum. The Memorandum will state the type and location of any non-compliance detected, in particular those non-compliances already shown in the standard tables provided by the Contractor as part of the monthly statement. For each individual case of non-compliance, the Engineer will determine a date by which the Contractor must have completed the necessary measures in order to remedy the cause of the non-compliance. A follow-up site visit is therefore necessary at the date fixed by the Engineer, or soon thereafter, in order to verify that the Contractor has indeed remedied the cause of non-compliance.
If at the date indicated in the Memorandum, the Contractor has not remedied the cause for non-compliance, independent of the reason given for their failure to do so, the Contractor is subject to Payment Reductions in accordance with the relevant clauses of the Conditions of Contract.

Payment Reductions are variable over time. If the Contractor fails to remedy a cause of non- compliance for which a payment reduction has already been applied, the amount of the payment reduction increases month by month for that particular cause of non-compliance, without a ceiling being applied, until compliance is established. The calculation of the initial (first month) amounts of payment reductions, and the formula for their adjustment over time, is to be based on the following rules given in Table 26.7.

CRITERIA	CONDITIONS FOR APPLICATION OF PAYMENT REDUCTIONS	UNIT RATES FOR NON COMPLIANCE	REFERENCE TO TECHNICAL SPECIFICATIONS (PARAGRAPH NO.)
Road Safety	*Cleanliness of road: observed anywhere in a one km section does not comply with the service levels*	20% of the monthly lump sum for one km applied to each one-km section which does not	26-50-004(a)
Drainage	*Cleanliness and condition of drainage structures (lateral ditches)*: For a one-km section, to be determined for subsections of 50 m each. If unacceptable obstructions exist in more than one subsection, the one-km section does not comply	30% of the monthly lump sum for one km, applied to each one-km section which does not comply	26-50-004(a) iv
Vegetation	*Vegetation height (maximum)*: The maximum height measured anywhere in a one-km section is above the threshold value	20% of the monthly lump sum for one km, applied to each on-km section which does not comply	26-50-004(a) v
	Vegetation (clearance above road): The vertical clearance between the road surface and the lowest point of tree or other plan is less than the threshold value	10% of the monthly lump sum for one km, applied to each on-km section which does not comply.	26-50-004(a)

Structures and River Beds	*Steel, concrete, expansion joints, retention walls, river beds:* For a one km of section, to be determined for each structure. If non-compliant on more than one structure, the one km does not comply	20% of the monthly lump sum for one km, applied to each one-km section which does not comply	26-50-004(a) vi

Note: (i) The Unit Rates of payment reductions ("PR_u) shown in the above table are applicable during the first 30 days of non-compliance.

(ii) If the non-compliance has not been remedied within thirty days, liquidated damages for periods beyond 30 days are calculated based on the following formula:

$$\mathbf{PR = 2^n PR_u}$$ considering :

J = number of days of non-compliance, and n = $\left\{ \left\lceil \frac{J-1}{30} \right\rceil \right\}$ **rounded up to full number (without decimals)**

2712: Determination of Liquidated Damages- Instructed Works

The liquidated damages are **0.05%** for the particular item delayed, per calendar day of delay up to a limit of 10% of the contract price.

2713: Maintenance of Electrical and Street Lighting

SCOPE OF WORK

a. General

The Bidder shall conscientiously fulfill, to the highest professional standards, the role of managing the street lighting and to ensure that the assignment is carried out to the highest ethical standards in accordance with the Conditions of Contract, or any amendments thereto.

The Bidder shall perform all work necessary as called for in these Service levels including:

1. Supply, installation, testing and commissioning of 12m single arm poles, 12m double arm poles, HPS fittings, tunnel lights, high masts, control pillars complete with all the necessary accessories and fittings so as to bring the road to 100% service levels.
2. 24-hour patrol and surveillance (Day and Night Patrols)
3. Replacement of bulbs and related accessories
4. Replacement of damaged or worn out fittings
5. Repair/ Replacement of Knocked poles and arms, fittings, control pillars and high-masts complete with all the accessories
6. Repair/ Replacement of Vandalized poles and arms, fittings, control pillars and high-masts complete with all the accessories
7. Anchoring and strengthening of (leaning) poles to upright position using approved gravel material or equivalent.
8. Joint monthly meter reading
9. Provision of security to deter vandalism of the street lighting furniture
10. Liaising and follow ups with KPLC to restore power in case of an outage or other emergencies.
11. Insurance follow up for compensation in case of any damage to Street lighting furniture
12. Pruning of overgrown tree branches obstructing the luminaires in liaison with NCG and spoiling the cutings
13. Road stakeholder engagement to ensure smooth running of the project (Kenya Police, KPLC, Public, Nairobi County Government, Kiambu County Government and Area Chiefs)

The objectives of the assignment are:

- To provide sustainable street lighting to ensure a safe, secure and attractive visual environment for pedestrian and vehicular traffic, during times of inadequate natural lighting, taking into consideration economic efficiency, and appropriate technology choice.
- To provide a management framework that will ensure the street lighting attain the highest standards and reliability.
- Pay for operational expenses such as electricity bills, etc.;

In carrying their work, the Bidder shall co-operate fully with the concerned agencies of the Government of Kenya, in particular the Maintenance Department and Planning & Environment Department, Kenya Rural Roads Authority, Nairobi County Government, Provincial Administration, Kenya Airports Authority, amongst others. The Bidder shall provide the necessary support services related to and necessary for the successful implementation of the assignment. The work shall cover but not be limited to the aspects outlined in these Terms of Reference.

b. Description

The street lighting furniture includes all the street lighting facilities along the 28.9 km of the road. These are:

1. 12 m double arm galvanized poles including arms
2. 12m galvanized single arm poles including arms

3. 35m highmasts and all its accessories
4. All light fixtures and fittings on 12 meter poles and highmasts
5. All underpass and tunnel fittings
6. All control pillars and its accessories
7. All cables and accessories

The assignment has two major components:

1. Street lighting
2. Safety control

The works shall include maintenance of current and new installations of street lighting

c. Street lighting

(i) Maintenance Personnel

All personnel undertaking street lighting maintenance activities shall have the appropriate qualifications, training, experience and registration with relevant professional bodies necessary to undertake their designated activities in a professional and safe manner. These shall include working in a high speed road environment and formal electrical qualifications. Appropriate training of personnel is the responsibility of the Contractor. KeRRA will undertake random audits to ensure compliance.

(ii) Maintenance Plant and Equipment

Due to the height of road lighting installations, Elevated Work Platform (EWP) vehicles shall be used. Every operator shall possess a valid relevant driver's license and shall have an appropriate level of experience in EWP operation and shall be trained in safe work procedures.

iii) Replacement Parts

All replacement parts shall comply with existing installations unless the contractor at his own cost is willing to provide a substitute with similar or superior performance with the approval of KeRRA. The photometrics and electrical characteristics of replacement luminaries shall be such that the lighting and electrical integrity of the installations are not compromised. Where identical luminaries are not available, design verification for compliance with the standards shall be carried out by an appropriately qualified and experienced electrician.

iv) Traffic Management

Safety and traffic control plans shall be approved by KeRRA before maintenance work is conducted.
All signage used during road lighting maintenance shall be in accordance with the relevant standards. Where road lighting is expected to be non-operational for more than 2 days from when the fault is identified, the temporary sign "STREET LIGHTING UNDER REPAIR" shall be displayed.

v) Reporting requirements

The progress of any maintenance regime being undertaken shall be continually tracked and reported. Periodic maintenance meeting shall be schedule between the Contractor and KeRRAF
The meeting shall cover as a minimum the following items: -

- Review of performance of the road lighting installation
- Review of performance of the Management Contractor
- Reporting of current progress against expected – for example staffing levels/changes budgeting/expenditure and
- Discussion of issues/problems and how they are being addressed.

vi) Record Keeping

All road lighting maintenance activities shall be logged in order to monitors road lighting performance and to trend failure and outage rates.
Minimum details required to be logged and reported include: -

- Item management – pole, pit, switchboard, lamp, luminaire, re-openable junction box etc.
- Identification number
- Date installed
- Date maintained
- Type of maintenance service – damage/fault, bulk, lamp replacement, routine spot etc.

- Name of maintenance service provide (Contractor company name and maintenance personnel)
- Name of Road/Section and
- Lamp replacement date

vii) Scheduled Maintenance

1. <u>Electrical</u>

Periodic inspections and tests are required on the electrical installation ensure compliance with the standards. Full inspections and tests shall be carried out at a maximum of 2 weeks' intervals. Where the risk of degradation of the installation due to environmental or other factors is considered high, more frequent inspections shall be carried out. Spot check audits on parts of high risk installations shall be carried out at a maximum of 3 months' intervals. Typical high-risk factors may include corrosive environments, susceptibility to flood/submergence, devices nearing end of life, vermin habitats and high pedestrian activity.

Immediate electrical risks (including exposed live conductors, unearthed equipment and incorrect polarity) must be made safe and rectified when discovered and KeRRA should be notified of the same.

Control pillar maintenance

Maintenance shall be carried out to ensure the electrical integrity of the switchboard. As the switchboard is the point is the point where lighting circuits originate and are controlled it is important that all the components are in good condition.

Inspection shall include but not necessarily be limited to:-

- Ingress of water and vermin
- Deterioration of weatherproof seals and other components
- Cracking and deterioration of the concrete cover case
- Damage by rodents
- Detection of poor connections and joints
- Correct earthing
- Protection against direct and indirect contact with LV terminals/surfaces
- Correct internal labeling of components

Electrical test shall be carried out and documented in accordance with the existing standards.

Cable and connection maintenance

Electrical cabling and connections shall be maintained to ensure a low impedance path for the electricity supply. While road lighting cable is expected to last in excess of 25 years under standard operating conditions, a number of factors (such as those previously mentioned) can reduce service life. Consequently, scheduled visual observations and electrical tests are required.

Where cable temperatures are significantly raised due to poor electrical connections, insulation damage can occur, which may ultimately result in fire. Clean cable termination surfaces, correct fixing tightness and the application of protecting grease to terminations can assist in maintaining the integrity. Thermal imaging can be used where practical and cost effective to aid early detection of high resistance joints.

Where water proof cable termination are not properly installed and maintained, water ingress can be a problem subsequent degradation of the cable. Within the cable termination enclosure, the sheath shall be carefully pealed back clear of the insulation and the bottom of the enclosure filled with a proprietary sealant to fill the area around the cable and the enclosure. The sea land shall encase the insulation/sheath interface so that any moisture tracking between the insulation and sheath cannot enter the enclosure. Proper closure of the enclosure and maintenance of seals will assist in maintaining a waterproof termination. Poorly fitting enclosures shall be replaced at the cost of the contractor.

Rodents and vermin attack as well as poor installation methods can also affect the integrity of the cable sheath. Where damage has occurred, moisture ingress and degradation will occur.

Where the rate insulation resistance degradation reasonably suggest that the cable insulation will not comply at the next periodic inspection interval, inspection frequency shall be increased or rectification undertaken.

Inspection items shall include, but not limited to:-

- Joints, connections and terminations for corrosion.
- Poor, loose, overheated or unsecured connections

- Damaged insulation
- Exposed conductors
- General condition of cable
- Evidence of rodent/vermin activity

Pits and conduit maintenance

Pits and conduits shall be inspected visually. Once it has been determined that the conduits installation complies with the required depth, this need no longer be checked except where work to the ground surface has been carried out in the vicinity of the conduit.

Pit lids shall be intact, undamaged and properly fitted to the pit. Pit shall be free of damage, with no collapse of ground around the pit, no collapse of the inside of the pit, and with the pit top level with the surrounding surface. Pit shall be free draining.

Maintenance of pits and conduits shall include but not limited to:-

- Ensuring adequate drainage
- Replacement of broken or chipped pit lids
- Rectifying collapsed pit side walls and other damage
- Maintaining ground/pit surface level and pit surrounds

2. Lighting

Periodic inspections of the lighting installation shall be undertaken to ensure the lighting is operating as designed. Bulk lamp changes if necessary and luminaire cleaning shall be carried out regularly during the contract period. Where the risk of degradation of the installation due to storms, environmental or other factors is considered high, more frequent inspections/maintenance shall be carried out. After bulk lamp replacement has been initiated, spot lamp replacement inspection shall be carried out more frequently if warranted by the number of failures reported. The rate of lamp mortality is not linear over time.

Luminaire Maintenance

Maintenance of luminaries shall include but not be limited to: -

- Cleaning of all optical surfaces of the luminaire, both internal and external.
- Checking of gaskets for deterioration and replacement where necessary.
- Replacement of damaged/weathered diffuser
- A visual check of the electrical components and wiring for signs of overheating
- Checking of all accessible screws, nuts and fixings for tightness
- Realigning of the luminaire as per designs specification as required.

Optical levels are designed to comply with the relevant standards at the time of installation. Sight lighting measurements are not required where an appropriate maintenance programme is followed. Hence it is important that light output be maintained throughout the life of the road lighting in accordance with the standards.
Where luminaires are installed in high pollution areas, more frequent cleaning may be required.

Bulk lamp replacement (BLR)

Bulk lamp replacement shall be carried out at least once every three years. BLR is where all lamps are replaced at one time irrespective of their operational status. The contractor is required to ascertain the possibility of carrying this exercise during the condition survey and he should factor this in his bid.
As there may be a significant number of lamps to be replaced in, BLR may be carried out over a three-year period where for example, a third of the lamps are replaced each year.

Spot lamp replacement

In addition to the programmed BLR, periodic lamp inspection patrols must be undertaken to detect spot lamp outages does not exceed 5% of the total lamp population.

Luminaire replacement

Luminaires shall be replaced at end of life (nominal life 20 years). Where possible, an equivalent type shall be used to maintain integrity of the lighting design. In the event the Contractor wishes to replace the luminaires in order to save on his operating costs, then this cost should be borne by the Contractor in consultation with the client.

Replacement of luminaires with a different type may impact on the lighting performance, prior to replacement, compliance with current lighting standards shall be verified. Where performance will not meet required standards, the installation shall be upgraded.

3. <u>Structural</u>

Periodic visual inspections shall be undertaken to ensure at least the following items are examined for compliance with the relevant standards.

- Steel poles
- Other luminaire supports (for example, under overpasses)

Steel pole Maintenance

Generally, once steel poles have been installed and commissioned, minimal maintenance is required. However, the following aspect shall be inspected as a minimum:

- Testing the thickness of galvanic protection at the pole base and other areas
- Pole vertical alignment tolerance check
- Surrounding area assessment

Road lighting poles can suffer damage from both major and minor incidents. They shall be replaced at the cost of the Contractor when any of the following damage is evident.

- Horizontal cut(s) or tear(s) exist and exceeds 20% of the pole circumference, or
- Deformation of pole due to impact exceeds 20% of the pole diameter, or
- Hatchway door cannot be securely fastened or is damaged to the extent it cannot be replaced or repaired, (even if the pole is not damaged).

Where sharp edges are present, but it is not considered necessary to replace the pole, the edges shall be rectified to remove the risk of personal injury. Where hatchway doors and/or fixing are damaged and can be replaced without the need for replacing the pole, the damaged part(s) shall be replaced.

Welding on poles shall only be undertaken at the initial pole fabrication stage. No additional welding of poles shall be undertaken.

4. <u>Environmental</u>

Vegetation Management

The growth of vegetarian near luminaries has the potential to significantly reduce the effectiveness of road lighting installations. Where vegetation or other obstructions have or may have an impact on road lighting performance, they shall be removed or otherwise treated to remove the risk at the cost of the Contractor in consultation with relevant authorities.

Vegetation may also reduce security, increase the likelihood of vermin and/or hinder access to switchgear and electrical pits and shall be managed accordingly. Concrete surrounds should be installed around equipment, particularly switchboards.

Vermin

Evidence of vermin infestation shall be removed, and damage caused by vermin shall be rectified. The installation shall be treated/modified to prevent/minimize the likelihood of re-infestation.

Maintenance access

Where necessary, access to sites shall be remedied to allow safe, all weather access by maintenance personnel.

General tidy up around streetlight poles

Each site shall be cleaned of all waste/rubbish so as to present a clean, tidy area that reflects well maintained Roads.

.

SECTION VII - DRAWINGS

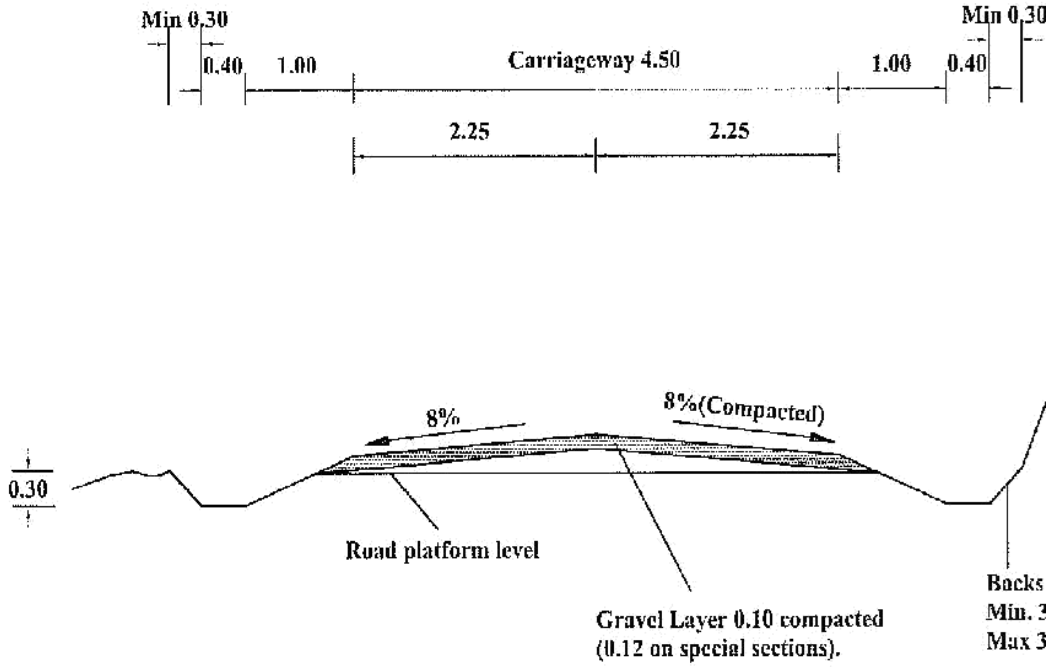

Notes:
1.All dimensions in metres
2.Gravel thickness may be increased as directed by the Engineer

C-2

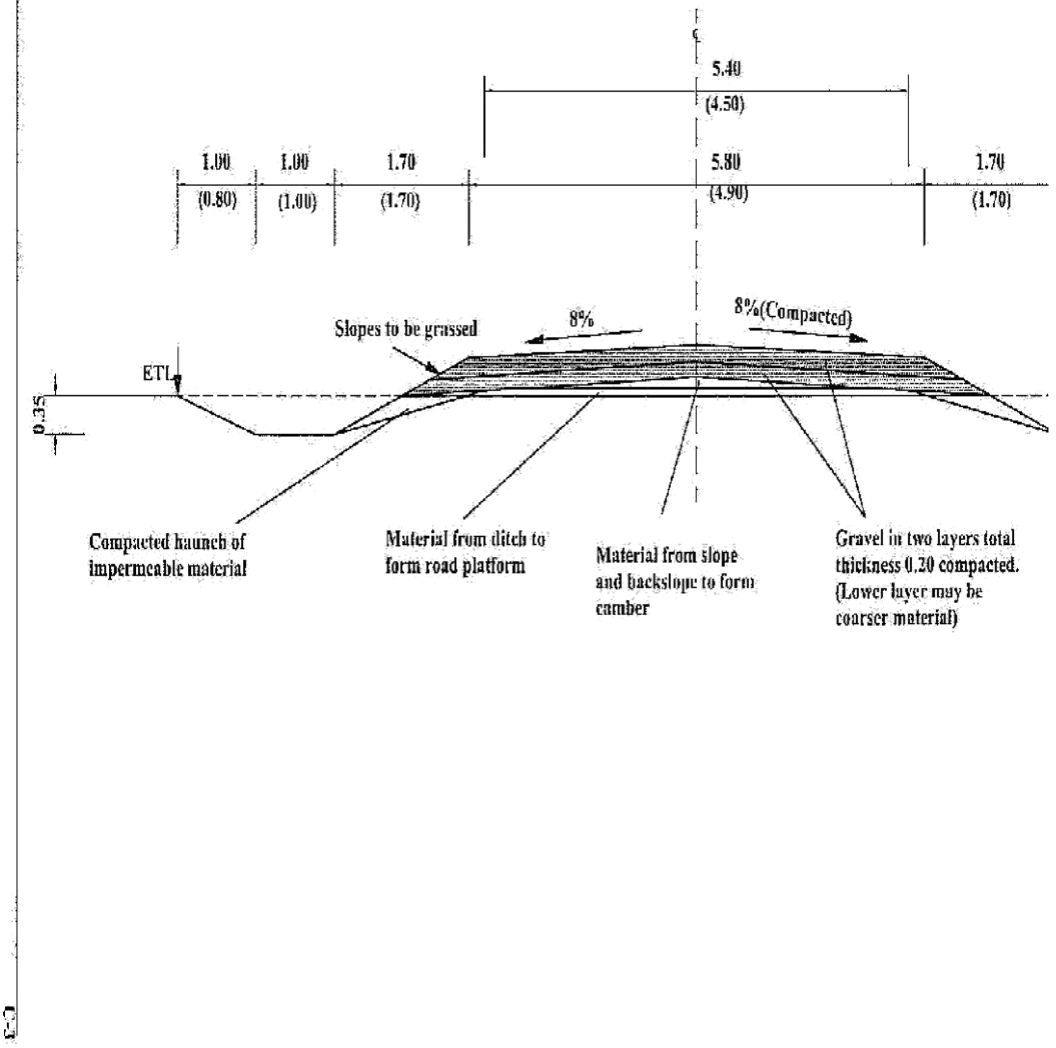
5.40
(4.50)
1.00
(0.80)
1.00
(1.00)
1.70
(1.70)
5.80
(4.90)
1.70
(1.70)
Slopes to be grassed
8%
8%(Compacted)
ETL
0.35
Compacted haunch of impermeable material
Material from ditch to form road platform
Material from slope and backslope to form camber
Gravel in two layers total thickness 0.20 compacted. (Lower layer may be coarser material)

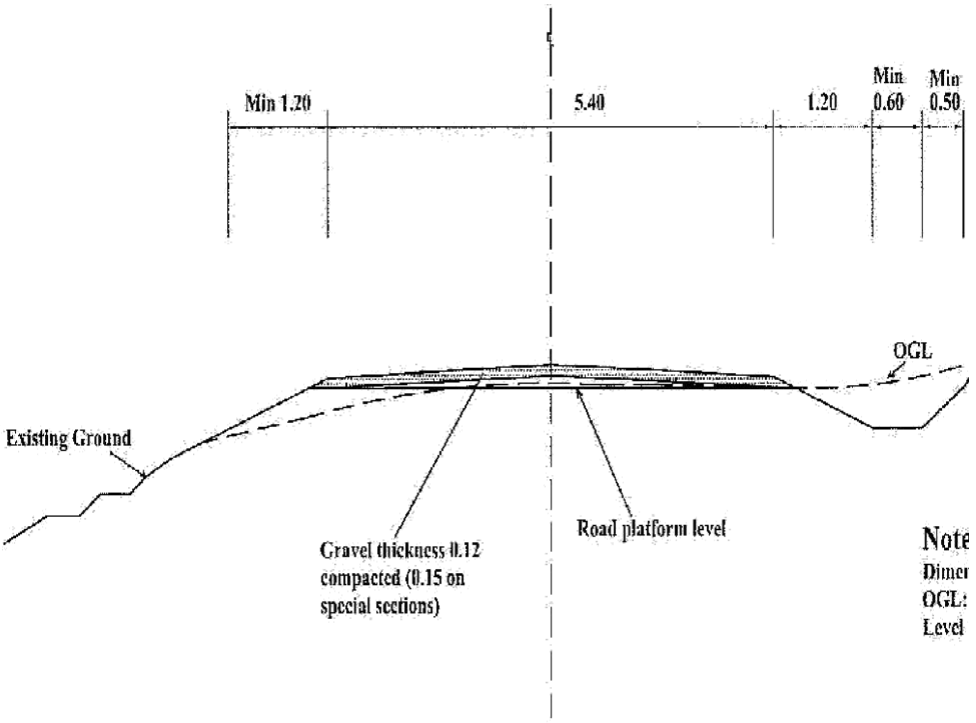
Min 1.20
5.40
1.20
Min
0.60
Min
0.50
OGL
Existing Ground
Gravel thickness 0.12
compacted (0.15 on
special sections)
Road platform level
Note
Dimer
OGL:
Level

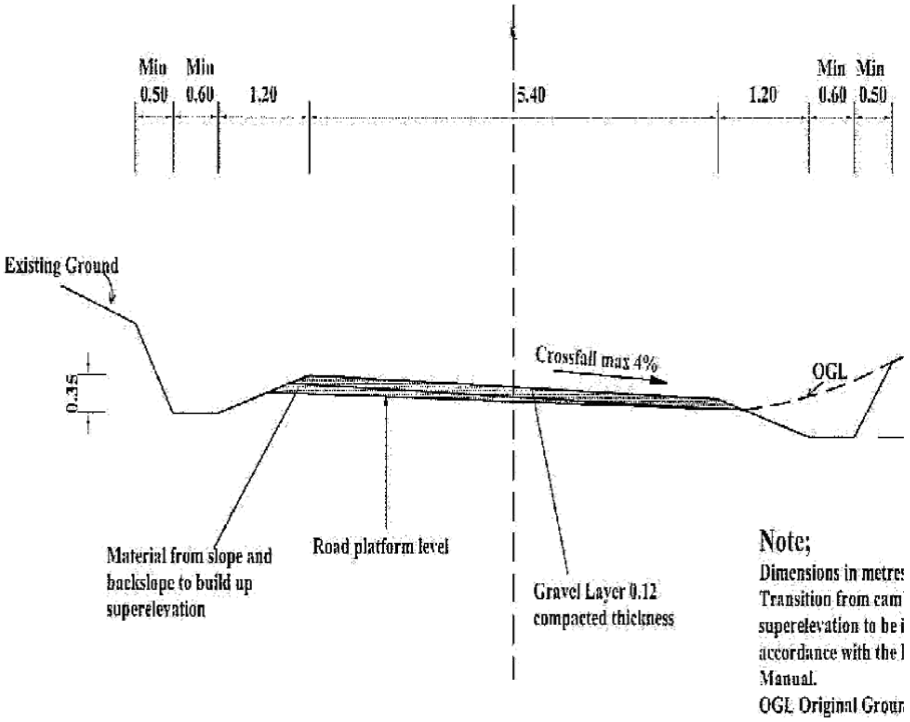
Min
0.50
Min
0.60
1.20
5.40
1.20
Min
0.60
Min
0.50
Existing Ground
0.35
Crossfall max 4%
OGL
Material from slope and backslope to build up superelevation
Road platform level
Gravel Layer 0.12 compacted thickness
Note;
Dimensions in metre
Transition from cam
superelevation to be i
accordance with the
Manual.
OGL Original Grou

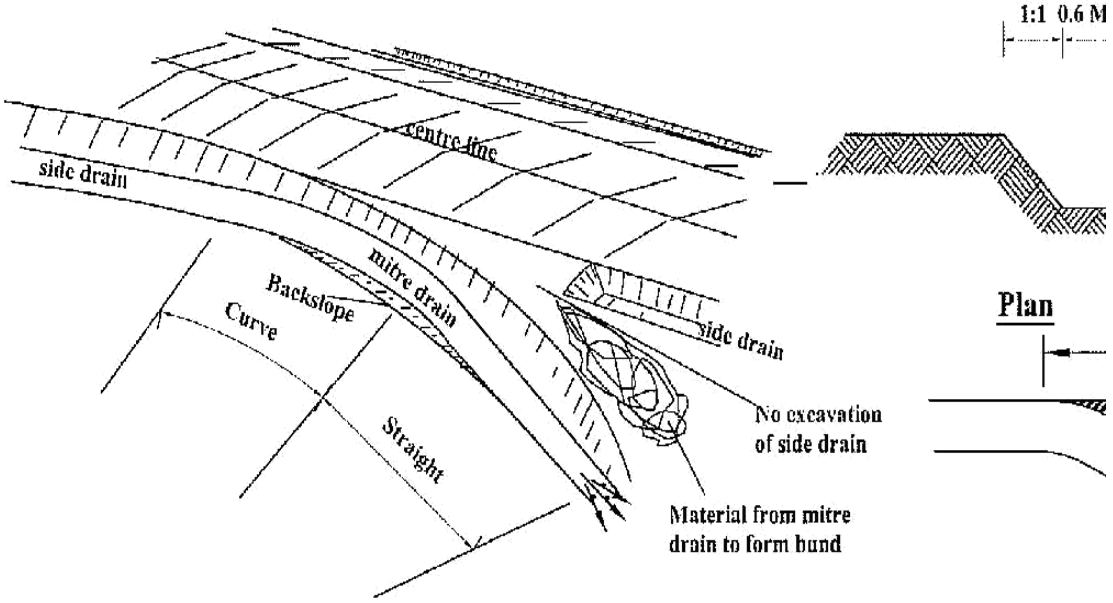

Mitre dr
Cross Se

1:1 0.6 M

Plan

Notes

Location,direction and length of th
by the Engineer

C-6

Scour checks made of wooden stakes

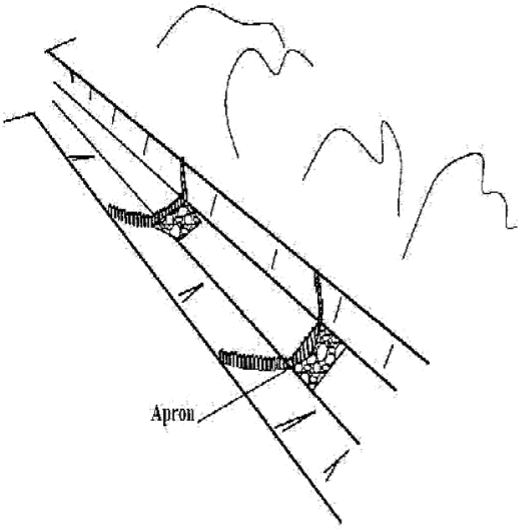

Scour checks made of stones

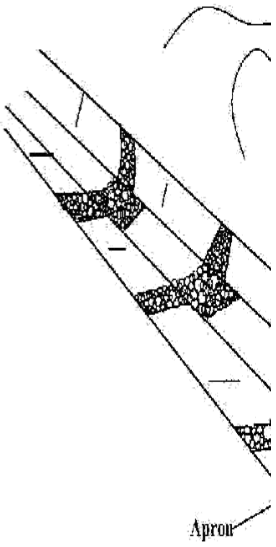

Scour checks made of stones

Cross section

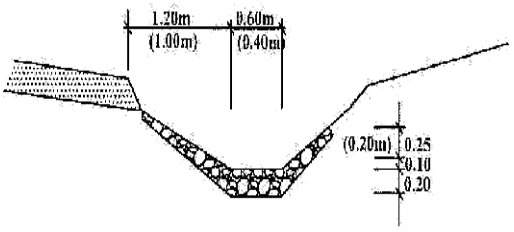

Ground plan

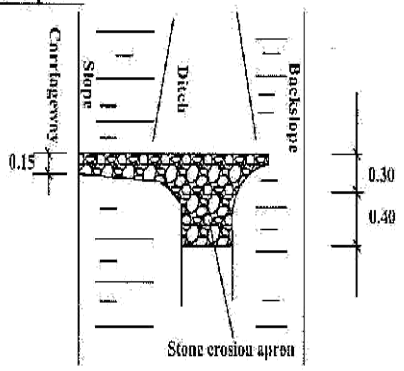

NOTE
1.Dimensions in metres

Scour checks mad

Cross section

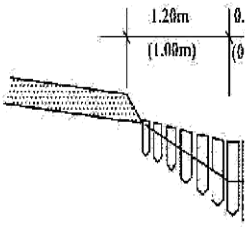

Ground plan

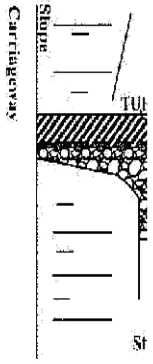

STONE WEIGHT:MIN 10KG
STAKE DIAMETER: MIN. 0.1(

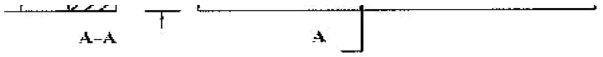

Note
1.Dimensions in mm

SECTION OF MASONRY SCOUR CHECK

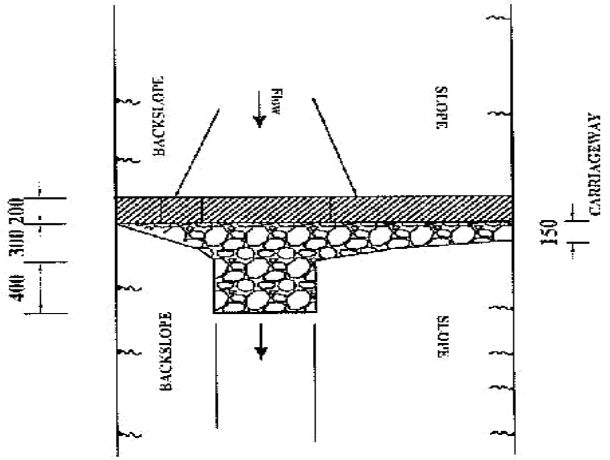

PLAN OF DRAIN WITH SCOUR CHECK

Cross-Section	Sizes in mm			Excav (m3)	Concrete (m3)	Apron stone pitching (m3)
	Length	Width	Depth			
A	2400	300	550	0.22	0.25	0.18
B	2000	200	500	0.18	0.2	0.14

SECTION OF CONCRETE SCOUR CHECK

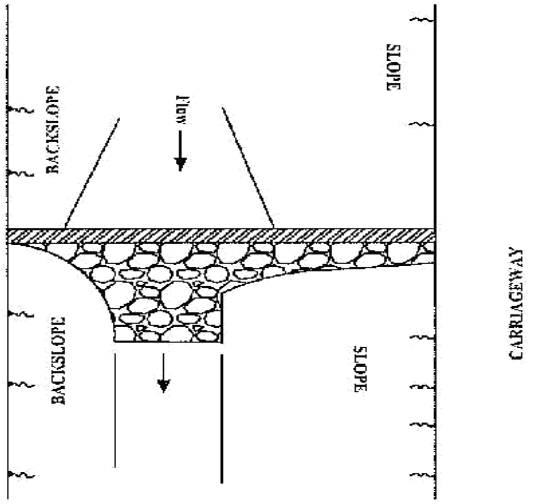

NOTE
1.Dimensions in mm

PLAN OF DRAIN WITH SCOUR CHECK

Cross-Section	Sizes in mm			Excav (m3)	Concrete (m3)	Apron stone pitching (m3)
	Length	Width	Depth			
A	2400	100	550	0.13	0.15	0.18
B	2000	100	500	0.10	0.09	0.14

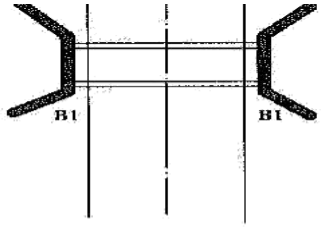

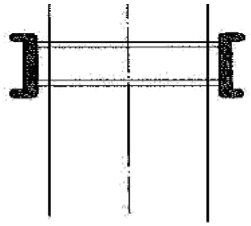

TYPE 2(ENTRY ONLY)

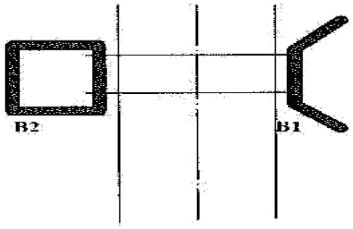

TYPE 4(ENTRY AND EXIT ON ACCESS)

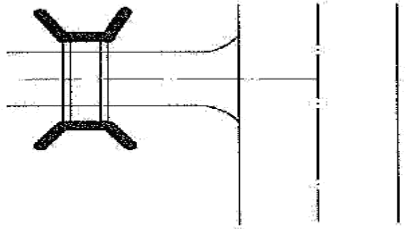

NOTE
1. The code numbers specify the shape and function and the code letter denotes the material:
A =Concrete block
B =Stone masonry
C =Concrete

SECTION A-A

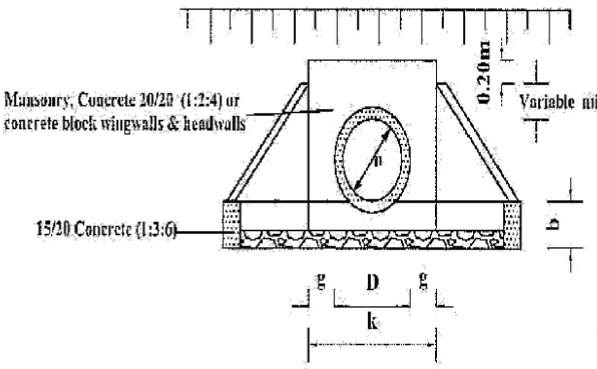

SECTION B-B

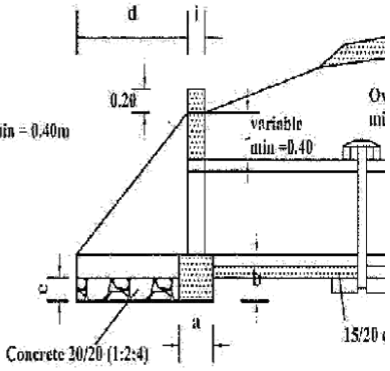

PLAN

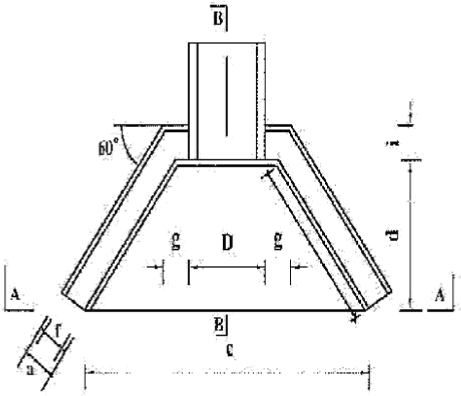

CULVERT TYPES	
X-SECTION WIDTH m	No. of pipes
4.50	6
5.50	7
6.50	8

PIPE DIAMETER IN M		TYPE A and C CONCRETE BL	
		450	600
DIMENSION	UNIT		
a FOUNDATION	m	0.30	0.30
b FOUNDATION	m	0.30	0.30
c FOUNDATION	m	2.20	2.35
d APRON	m	1.00	1.00
e APRON	m	0.20	0.20
f WALL	m	0.20	0.20
g WALL	m	0.30	0.30
h WALL	m	1.15	1.15
i WALL	m	0.20	0.20
k APRON	m	1.05	1.20
MATERIAL REQUIREMENT			
FOUNDATION (concrete)	m3	0.30	0.32
HEAD/WINGWALLS (Conrete/Masonry)	m3	0.42	0.49
APRON (concrete)	m3	0.33	0.36

SECTION A-A

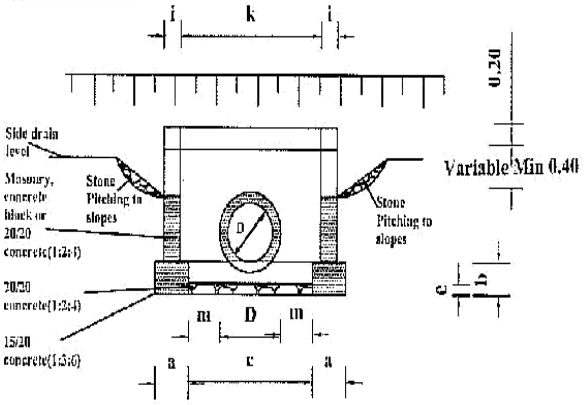

SECTION B-B

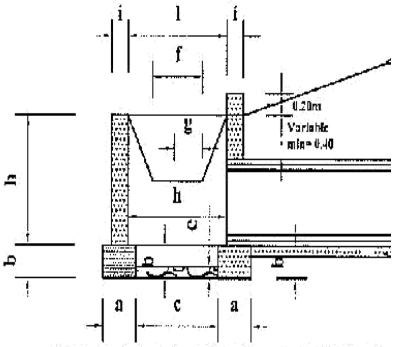

DIMENSIONS AND MATERIAL REQUIREMENTS

PIPE DIAMETER IN (M)		TYPE A CONCRETE BLOCKS			TY MA
		450	600	900	45
DIMENSION	UNIT				
a FOUNDATION	m	0.30	0.30	0.30	0.4
b FOUNDATION	m	0.30	0.30	0.30	0.3
c FOUNDATION	m	1.10	1.10	1.40	1.2
d APRON	m	0.90	0.90	0.90	1.0
e APRON	m	0.20	0.20	0.20	0.2
f DROP INLET	m	0.60	0.60	0.60	0.6
g DROP INLET	m	0.30	0.40	0.60	0.3
h DROP INLET	m	0.60	0.80	1.20	0.6
i DROP INLET	m	0.20	0.20	0.20	0.4
k DROP INLET	m	1.20	1.20	1.50	1.2
l DROP INLET	m	1.00	1.00	1.00	1.0
m DROP INLET	m	0.38	0.30	0.30	0.3
MATERIAL REQUIREMENT					
FOUNDATION (concrete)	m3	0.47	0.47	0.52	0.7
HEAD/WINGWALLS (Concrete/Masonry)	m3	0.56	0.72	1.15	1.2
APRON (concrete)	m3	0.24	0.24	0.30	0.2

PLAN

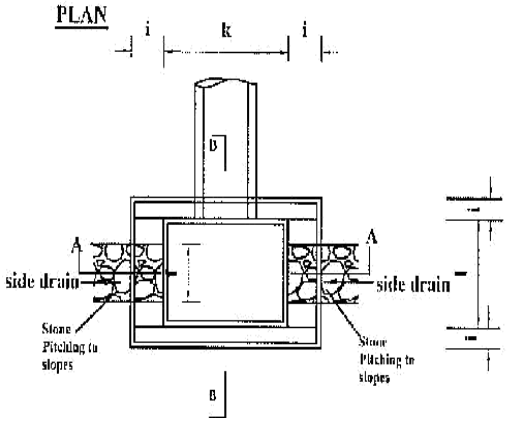

C-12

SECTION A-A

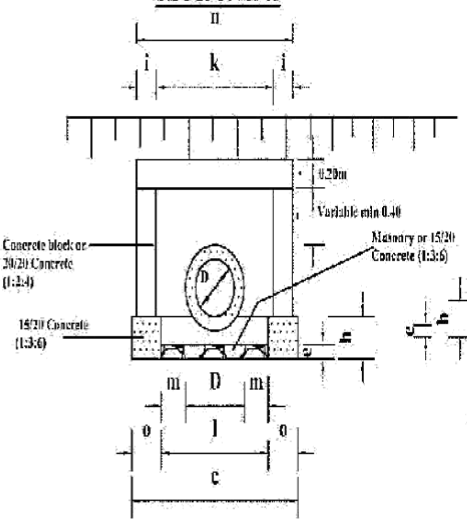

SECTION B-B

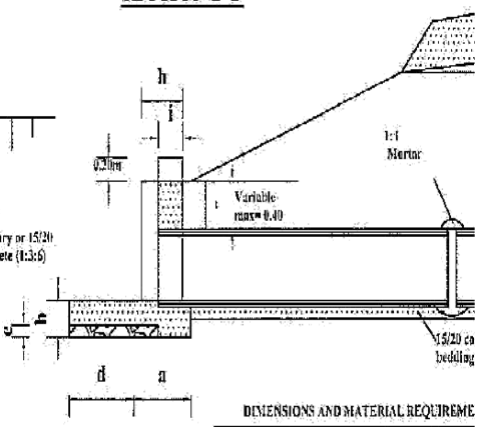

PLAN

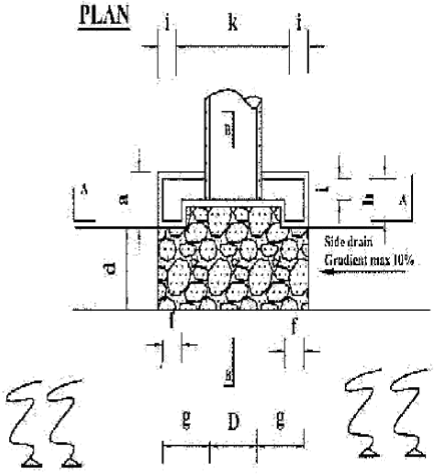

DIMENSIONS AND MATERIAL REQUIREME

	PIPE DIAMETER IN (M)		TYPE A and C CO BLOCKS	
			450	600
	DIMENSION	UNIT		
a	FOUNDATION	m	0.50	0.50
b	FOUNDATION	m	0.30	0.30
c	FOUNDATION	m	1.55	1.70
d	APRON	m	0.60	0.60
e	APRON	m	0.20	0.20
f	HEADWALL	m	0.20	0.20
g	HEADWALL	m	0.50	0.50
h	HEADWALL	m	0.50	0.50
i	HEADWALL	m	0.50	0.50
k	HEADWALL	m	0.50	0.50
l	FOUNDATION	m	0.50	0.50
m	FOUNDATION	m	0.50	0.50
n	HEADWALL	m	0.50	0.50
o	FOUNDATION	m	0.50	0.50
MATERIAL REQUIREMENT				
	FOUNDATION (concrete)		0.23	0.19
	HEADWING WALLS (Concrete/Masonry)		0.34	0.37
	APRON (concrete)		0.05	0.09

SECTION A-A

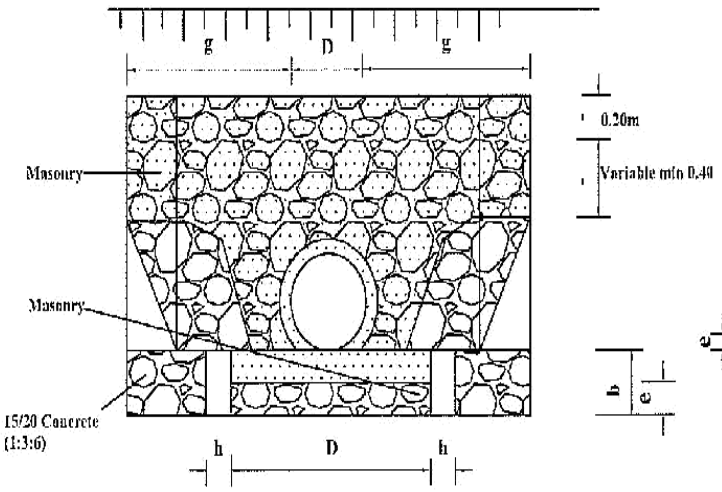

SECTION B-B

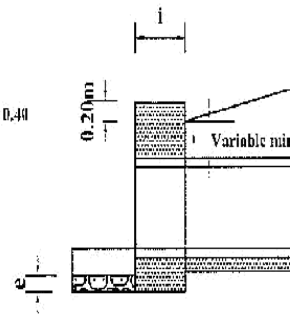

PLAN

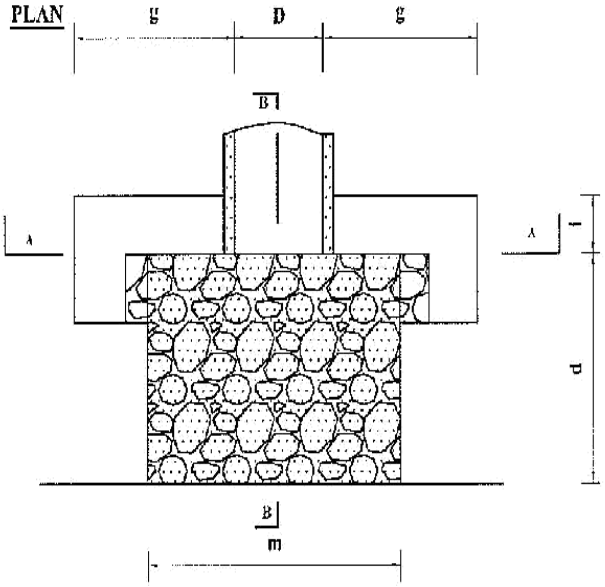

DIMENSIONS AND

PIPE DIAMETER (M)
DIMENSION
a FOUNDATIO
b FOUNDATIO
c FOUNDATIO
d APRON
e APRON
f HEADWALL
g HEADWALL
h HEADWALL
i HEADWALL
m FOUNDATIO
MATERIAL REQ
FOUNDATIO (concrete)
HEAD/WING (Conrete/Maso
APRON (concrete)

SECTION A-A

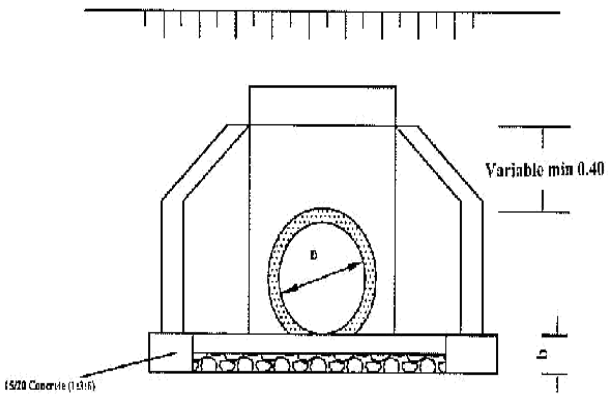

PLAN

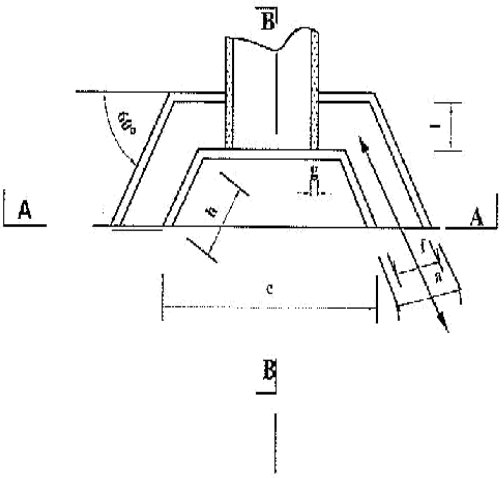

SECTION B-B

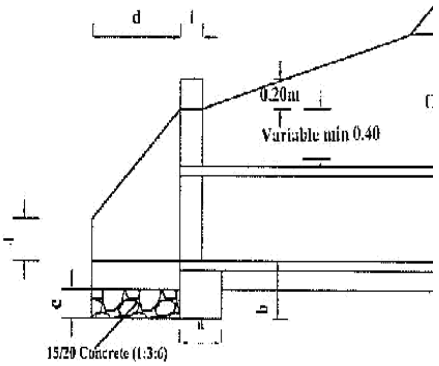

DIMENSIONS AND MATERIAL REQUIREMENTS

PIPE DIAMETER IN (M)			TYPE A (CONCRETE BLOCKS) 450	600	900
	DIMENSION	UNIT			
a	FOUNDATION	m	0.30	0.30	
b	FOUNDATION	m	0.30	0.30	
c	APRON	m	1.34	1.49	
d	APRON	m	0.60	0.60	
e	APRON	m	0.20	0.20	
f	WINGWALLS	m	0.20	0.20	
g	WINGWALLS	m	0.10	0.10	
h	HEADWALLS	m	0.69	0.69	
j	HEADWALLS	m	0.20	0.20	
k	HEADWALLS	m	0.65	0.80	
l	HEADWALLS	m	0.40	0.40	
MATERIAL REQUIREMENT					
FOUNDATION (concrete blocks)			0.18	0.20	
HEAD/WINGWALLS (Conrete/Masonry)			0.28	0.32	
APRON (concrete)			0.12	0.14	

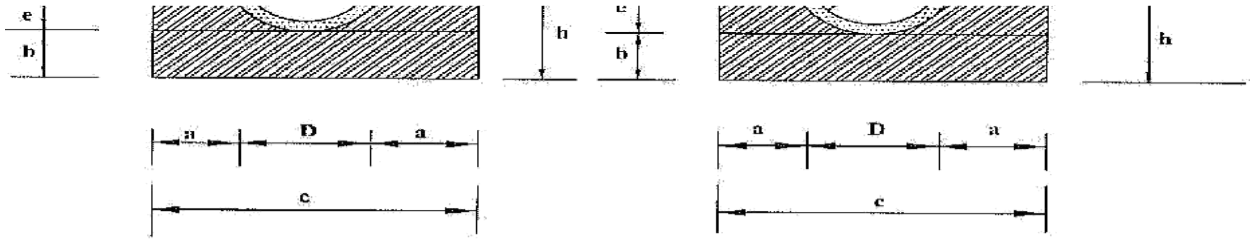

Diameter (D)	450 (mm)	600 (mm)	900 (mm)
a	0.15	0.20	0.20
b	0.10	0.15	0.15
c	0.86	1.12	1.48
d	0.56	0.72	1.08
e	0.14	0.18	0.27
f(min)	0.34	0.45	0.68
g	-	-	-
h	0.24	0.33	0.42
i	-	-	-
Concrete	Volume in (m3/m)		
Class 15/20	0.24	0.24	0.24
Application	-Fair subgrade condition -Overfill > 75% of the pipe diameter -Seasonal water flow only		
Remarks	Material for back/overfill shall be approved by the Engineer		

450 (mm)	600 (mm)	900 (mm)
0.15	0.20	0.20
0.10	0.15	0.15
0.86	1.12	1.48
0.56	0.72	1.08
0.28	0.36	0.54
0.34	0.45	0.68
-	-	-
0.38	0.51	0.69
-	-	-
Volume in (m3/m)		
0.20	0.37	0.56
-Fair to poor subgrade condition -Overfill > 75% of the pipe diameter -Seasonal water flow only		
Material for back/overfill shall be approved by the Engineer		

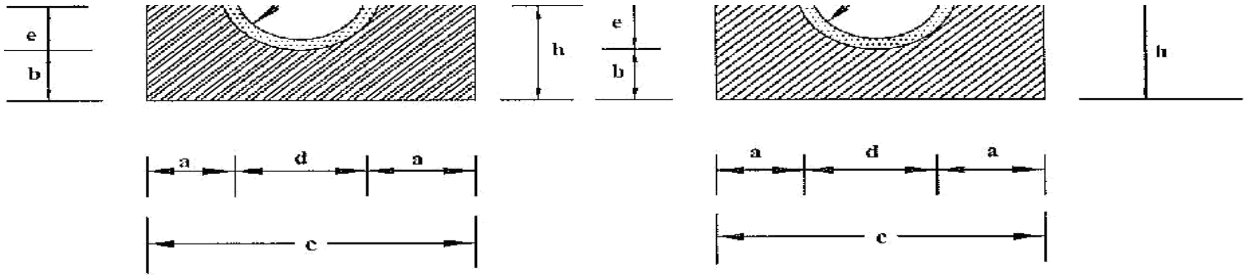

Diameter (D)	450 (mm)	600 (mm)	900 (mm)
a	0.15	0.20	0.20
b	0.10	0.15	0.15
c	0.86	1.12	1.48
d	0.56	0.72	1.08
e	0.42	0.54	0.81
f(min)	0.23	0.3	0.45
g	-	-	-
h	0.52	0.69	0.96
i	-	-	-
Concrete	Volume in (m3/m)		
Class 15/20	0.26	0.47	0.71
Application	-Fair subgrade condition -Overfill > 75% of the pipe diameter -Seasonal water flow only		
Remarks	Material for back/overfill shall be approved by the Engineer		

450 (mm)	600 (mm)	900 (mm)
0.15	0.20	0.20
0.10	0.15	0.15
0.86	1.12	1.48
0.56	0.72	1.08
0.46	0.52	0.78
0.15	0.15	0.15
0.15	0.15	0.15
0.81	1.02	1.38
0.28	0.35	0.45
Volume in (m3/m)		
0.37	0.61	0.92
-Fair to poor subgrade condition -Overfill > 75% of the pipe diameter -Seasonal water flow only		
Material for back/overfill shall be approved by the Engineer		

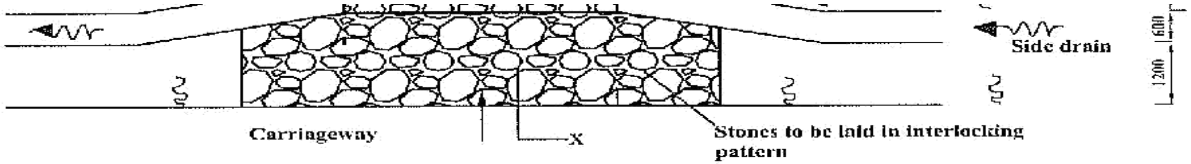

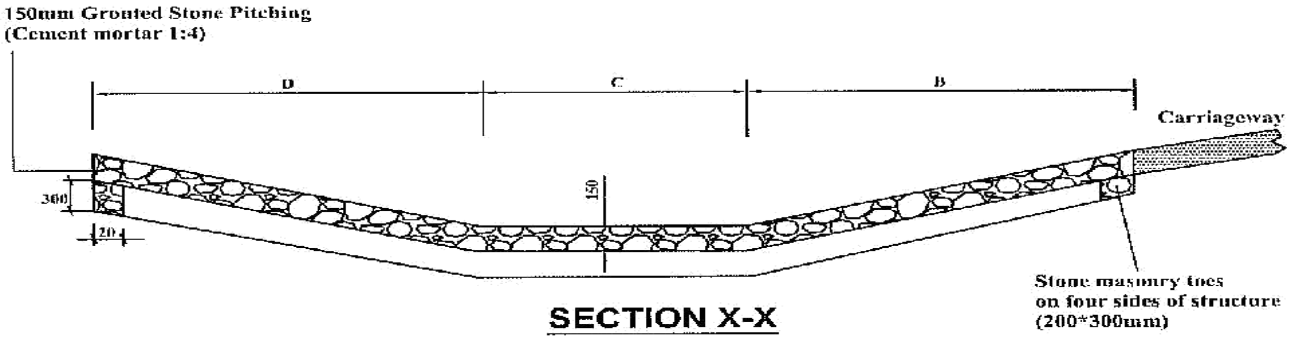

SECTION X-X

QUANTITIES TABLE								
Cross section	DIMENSONS					Excavation(m3)	Stone masonry (m3)	150mm Grouted stone pitching(m3)
	A	B	C	D	E			
A	4000	1800	600	1800	4200	7.5	1.30	21.75
	6000	1800	600	1800	4200	10.00	1.60	30.15
B	4000	1400	400	1800	3600	7.00	1.20	18.30
	6000	1400	400	1800	3600	9.00	1.50	25.50

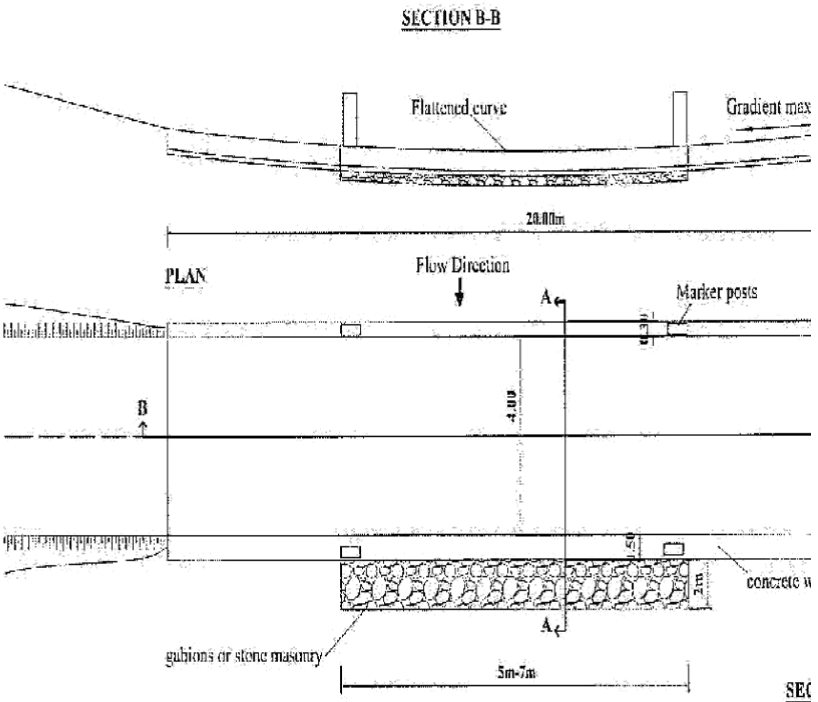

Material : All concrete Class 20/20 (1:2:4)

1 Concrete wall : 10m³
2 Concrete slab: 24m³ or stone masonry
3 Concrete toe : 8m³ or stone masonry
4 Gabions / mattress rock fill: 4.3m³ or stone masonry
5 Gabions /mattress: 36m²
6 Marker posts - precast concrete: 4 no.
7 Excavation (slab + toes + gabions) 54.2m³

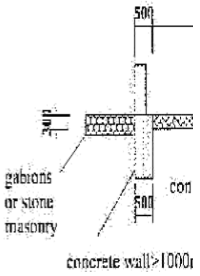

SECTION A-A

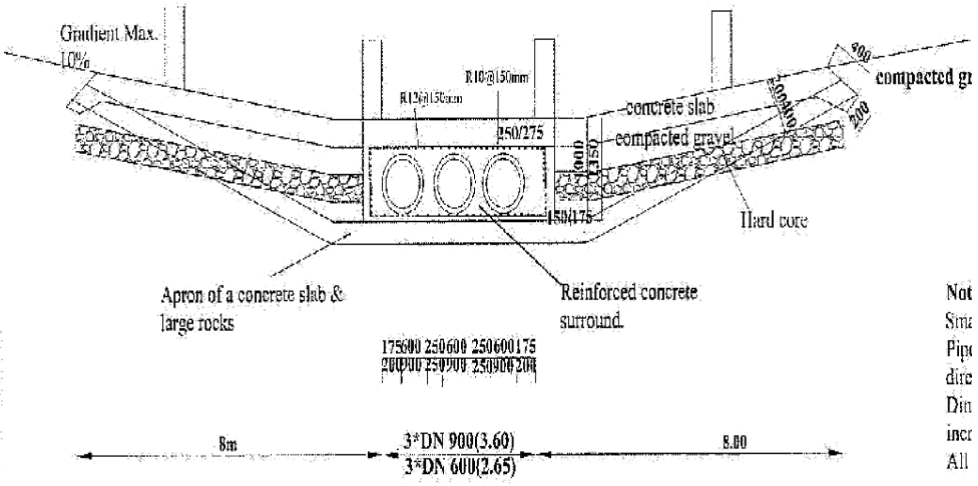

Not
Sma
Pipe
dire
Din
incr
All

PLAN

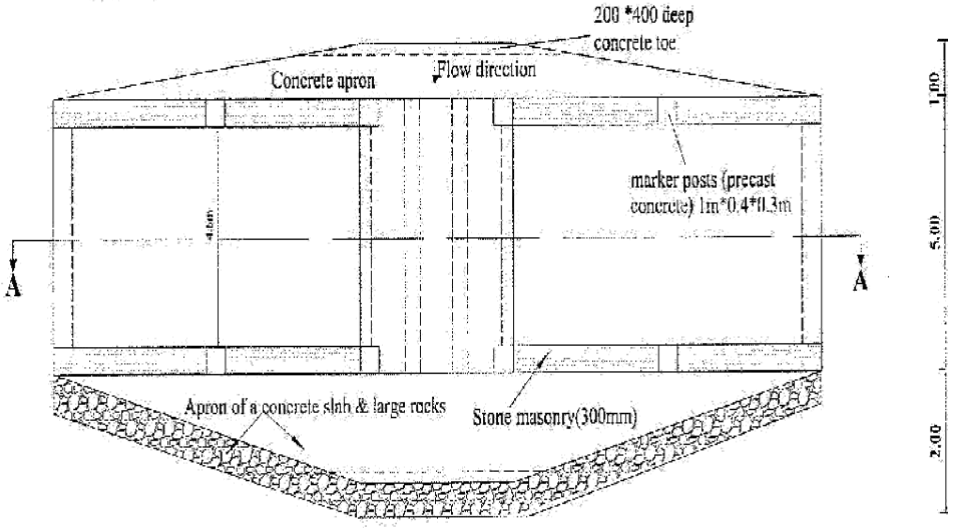

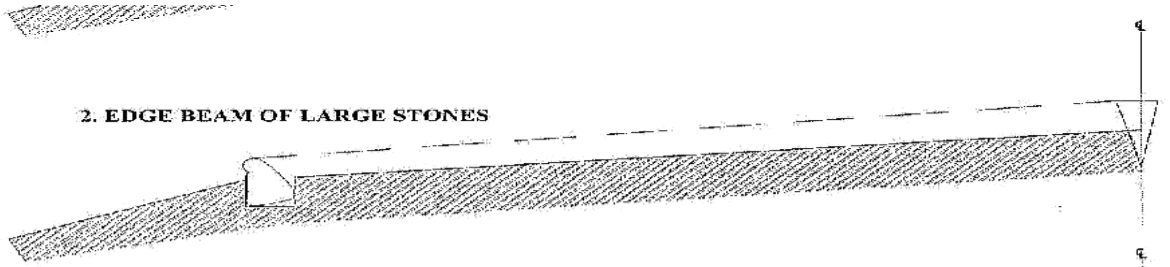

2. EDGE BEAM OF LARGE STONES

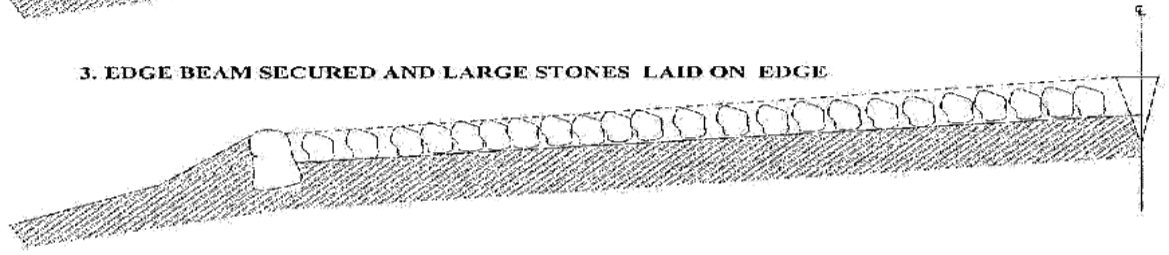

3. EDGE BEAM SECURED AND LARGE STONES LAID ON EDGE

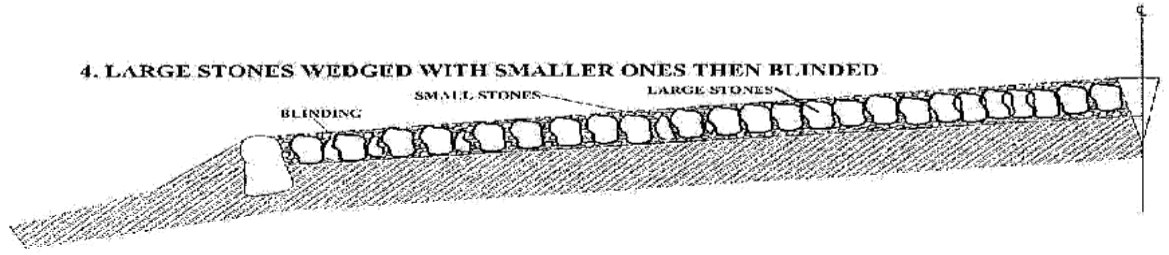

4. LARGE STONES WEDGED WITH SMALLER ONES THEN BLINDED

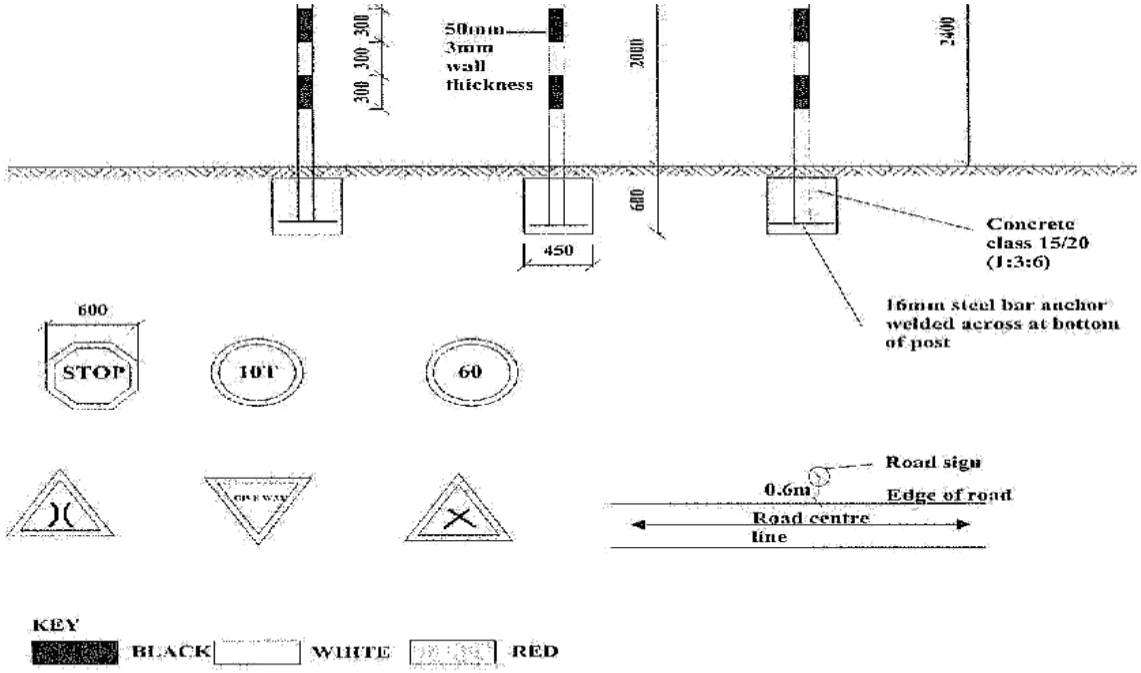

1. The type of sign required and their location shall be as shown on the Road Plan or as directed by the Engineer.
2. Sign plate to be 2mm thick mild steel plate
3. Sign post to be 50mm fixing clamps/brackets.
4. Sign plate to be fixed to steel tube by 8 Nos M10 bolts and 50mm fixing clamps/brackets.
5. Sign paints shall be reflective.
6. The sign plate and post shall be treated by applying two coats of lead red oxide paint before applying a priming and two finish coats of approved paints. Paints used shall have a hard, durable and glossy finish.

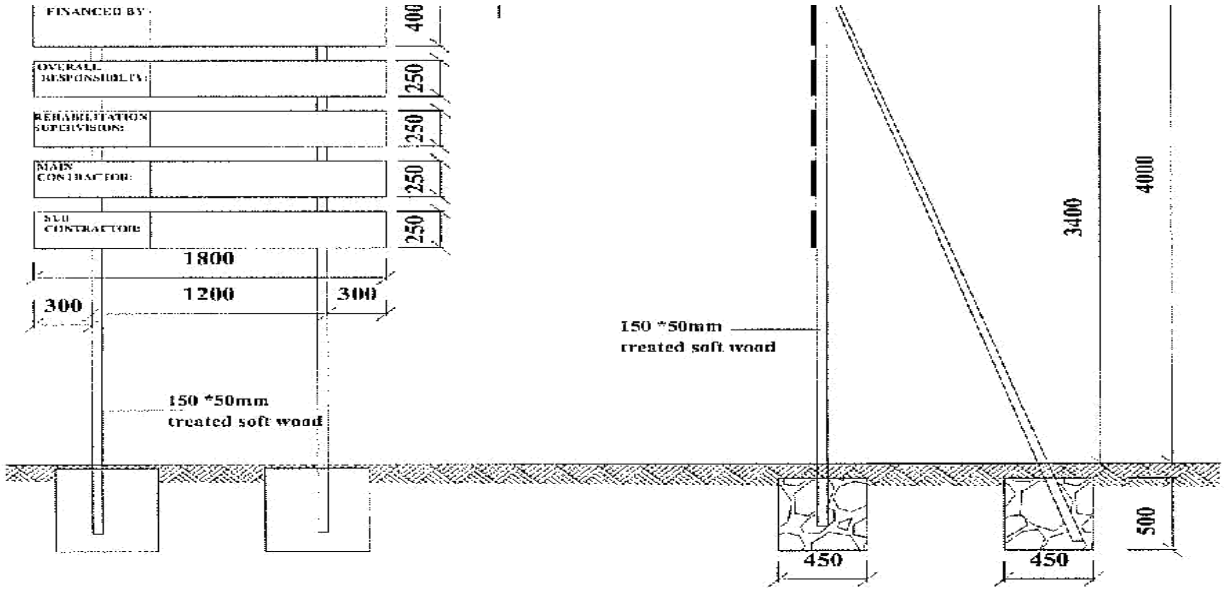

NOTES

1. The wording of the project sign board and the location to be as directed by the Engineer.
2. Materials to be used for fabrication of signboard shall be pressure impregnated treated softwood timber
3. Wording board posts to be attached to the posts with galvanised nails
4. Project board posts and struts to be embedded in concrete class 20/20(1:2:4)

SUPPLEMENTARY INFORMATION

PART 3 – CONDITIONS OF CONTRACT AND CONTRACT FORMS

Section VIII - General Conditions of Contract 1. GENERAL CONDITIONS

1.1 General Provisions

1.1.1 Definitions

In the Conditions of Contract ("these Conditions"), which include Particular Conditions, Parts A and B, and these General Conditions, the following words and expressions shall have the meanings stated. Words indicating persons or parties include corporations and other legal entities, except where the context requires otherwise.

1.1.2 The Contract

"Bills of Quantities", "Daywork Schedule" and "Schedule of Payment Currencies" mean the documents so named (if any) which are comprised in the Schedules.

"Contract Agreement" means the contract agreement referred to in Sub-Clause 1.6 [Contract Agreement].

"Contract" means the Contract Agreement, the Letter of Acceptance, the Letter of Tender, these Conditions, the Specification, the Drawings, the Schedules, and the further documents (if any) which are listed in the Contract Agreement or in the Letter of Acceptance.

"Drawings" means the drawings of the Works, as included in the Contract, and any additional and modified drawings issued by (or on behalf of) the Procuring Entity in accordance with the Contract.

"Laws" means all national legislation, statutes, ordinances, and regulations and by-laws of any legally constituted public authority.

"Letter of Acceptance" means the letter of formal acceptance, signed by the contractor and the Procuring Entity, including any annexed memoranda comprising agreements between and signed by both Parties.

"Letter of Tender" means the document entitled letter of tender or letter of tender, which was completed by the Contractor and includes the signed offer to the Procuring Entity for the Works.

"SCC" means the Special Conditions of Contract completed by the Procuring Entity which modify the General Conditions of Contract.

"Schedules" means the document(s) entitled schedules, completed by the Contractor and submitted with the Letter of Tender, as included in the Contract. Such document may include the Bills of Quantities, data, lists, and schedules of rates and/or prices.

"Specification" means the document entitled specification, as included in the Contract, and any additions and modifications to the specification in accordance with the Contract.Such document specifies the Works.

"Tender" means the Letter of Tender and all other documents which the Contractor submitted with the Letter of Tender, as included in the Contract.

1.1.3 Parties and Persons

"Contractor's Personnel" means the Contractor's Representative and all personnel whom the Contractor utilizes on Site, who may include the staff, labor and other employees of the Contractor and of each Subcontractor; and any other personnel assisting the Contractor in the execution of the Works.

"Contractor's Representative" means the person named by the Contract or in the Contractor appointed from time to time by the Contractor under Sub-Clause 4.3 [Contractor's Representative], who acts on behalf of the Contractor.

"Contractor" means the person(s) named as contractor in the Letter of Tender accepted by the Procuring Entity and the legal successors in title to this person(s).

"Engineer" means the person appointed by the Procuring Entity to act as the Engineer for the purposes of the Contract and named in the **SCC**, or other person appointed from time to time by the Procuring Entity and

notified to the Contractor under Sub-Clause 3.4 [Replacement of the Engineer].
"Party" means the Procuring Entity or the Contractor, as the context requires.

"Procuring Entity" means the Entity named in the Special Conditions of Contract.

"Procuring Entity's Personnel" means the Engineer, the assistants referred to in Sub-Clause 3.2 [Delegation by the Engineer] and all other staff, labor and other employees of the Engineer and of the Procuring Entity; and any other personnel notified to the Contractor, by the Procuring Entity or the Engineer, as Procuring Entity's Personnel.

"Procuring Entity" means the person named as Procuring Entity in the **SCC** and the legal successors in title to this person.

"Subcontractor" means any person named in the Contract as a subcontractor, or any person appointed as a subcontractor, for a part of the Works; and the legal successors in title to each of these persons.

1.1.4 Dates, Tests, Periods and Completion

"Base Date" means a date 30 day prior to the submission of tenders.

"Commencement Date" means the date notified under Sub-Clause 8.1 [Commencement of Works].

"Completion Certificate" means the certificate issued under Sub-Clause 11.9 [Performance

Certificate]. **"Day"** means a calendar day and "year" means 365 days.

"Defects Notification Period" means the period for notifying defects in the Works or a Section (as the case may be) under Sub-Clause 11.1 [Completion of Outstanding Work and Remedying Defects], which extends over 365 days except if otherwise stated in the **SCC** (with any extension under Sub-Clause 11.3 [Extension of Defects Notification Period]), calculated from the date on which the Works or Section is completed as certified under Sub-Clause 10.1[Taking Over of the Works and Sections].

"Taking-Over Certificate" means a certificate issued under Clause 10 [Procuring Entity's Taking Over].

"Tests after Completion" means the tests (if any) which are specified in the Contract and which are carried out in accordance with the Specification after the Works or a Section (as the case may be) are taken over by the Procuring Entity.

"Tests on Completion" means the tests which are specified in the Contract or agreed by both Parties or instructed as a Variation, and which are carried out under Clause 9 [Tests on Completion] before the Works or a Section (as the case may be) are taken over by the Procuring Entity.

"Time for Completion" means the time for completing the Works or a Section (as the case may be) under Sub- Clause 8.2 [Time for Completion], as stated in the **SCC** (with any extension under Sub-Clause 8.4 [Extension of Time for Completion]), calculated from the Commencement Date.

1.1.5 Money and Payments

"Accepted Contract Amount" means the amount accepted in the Letter of Acceptance for the execution and completion of the Works and the remedying of any defects.

"Contract Price" means the price defined in Sub-Clause 14.1 [The Contract Price] and includes adjustments in accordance with the Contract.

"Cost" means all expenditure reasonably incurred (or to be incurred) by the Contractor, whether on or off the Site, including overhead and similar charges, but does not include profit.

"Final Payment Certificate" means the payment certificate issued under Sub-Clause 14.13 [Issue of Final Payment Certificate].

"Final Statement" means the statement defined in Sub-Clause 14.11 [Application for Final Payment

Certificate].
"Foreign Currency" means acurrency in which part (orall) of the Contract Price is payable, but not the Local Currency.

"Interim Payment Certificate" means a payment certificate issued under Clause 14 [Contract Price and Payment], other than the Final Payment Certificate.

"Local Currency" means the currency of the Country.

"Payment Certificate" means a payment certificate issued under Clause 14 [Contract Price and Payment].

"Provisional Sum" means a sum (if any) which is specified in the Contract as a provisional sum, for the execution of any part of the Works or for the supply of Plant, Materials or services under Sub-Clause 13.5 [Provisional Sums].

"Retention Money" means the accumulated retention moneys which the Procuring Entity retains under Sub-Clause 14.3 [Application for Interim Payment Certificates] and pays under Sub-Clause 14.9 [Payment of Retention Money].

"Statement" means a statement submitted by the Contractor as part of an application, under Clause 14 [Contract Price and Payment], for a payment certificate.

1.1.6 Works and Goods

"Contractor's Equipment" means all apparatus, machinery, vehicles and other things required for the execution and completion of the Works and the remedying of any defects. However, Contractor's Equipment excludes Temporary Works, Procuring Entity's Equipment (if any), Plant, Materials and any other things intended to form or forming part of the Permanent Works.

"Goods" means Contractor's Equipment, Materials, Plant and Temporary Works, or any of them as appropriate.

"Materials" means things of all kinds (other than Plant) intended to form or forming part of the Permanent Works, including the supply-only materials (if any) to be supplied by the Contractor under the Contract.

"Permanent Works" means the permanent works to be executed by the Contractor under the Contract.

"Plant" means the apparatus, machinery and other equipment intended to form or forming part of the Permanent Works, including vehicles purchased for the Procuring Entity and relating to the construction or operation of the Works.

"Section" means a part of the Works specified in the **SCC** as a Section (if any).

"Temporary Works" means all temporary works of every kind (other than Contractor's Equipment) required on Site for the execution and completion of the Permanent Works and the remedying of any defects.

"Works" mean the Permanent Works and the Temporary Works, or either of them as appropriate.

1.1.7 Other Definitions

"Contractor's Documents" means the calculations, computer programs and other software, drawings, manuals, models and other documents of a technical nature (if any) supplied by the Contractor under the Contract.

"Country" means Kenya as the country in which the Site is located, where the Permanent Works are to be executed.

"Force Majeure" is defined in Clause 19 [Force Majeure].

"Laws" means all national (or state) legislation, statutes, ordinances and other laws, and regulations and by-laws of any legally constituted public authority.

"Notice of Dissatisfaction" means the notice given by either Party to the other under Sub-Clause 20.4

indicating its dissatisfaction and intention to commence arbitration.
"Performance Security" means the security (or securities, if any) under Sub-Clause 4.2 [Performance Security].

"Procuring Entity's Equipment" means the apparatus, machinery and vehicles (if any) made available by the Procuring Entity for the use of the Contractor in the execution of the Works, as stated in the Specification; but does not include Plant which has not been taken over by the Procuring Entity.

"Site" means the places where the Permanent Works are to be executed, including storage and working areas, and to which Plant and Materials are to be delivered, and any other places as may be specified in the Contract as forming part of the Site.

"Unforeseeable" means not reasonably foreseeable by an experienced contractor by the Base Date.

"Variation" means any change to the Works, which is instructed or approved as a variation under Clause 13 [Variations and Adjustments].

1.2 Interpretation

In the Contract, except where the context requires otherwise:

a) Words indicating one gender include all genders;
b) words indicating the singular also include the plural and words indicating the plural also include the singular;
c) provisions including the word "agree", "agreed" or "agreement" require the agreement to be recorded in writing;
d) "written" or "inwriting" means hand-written, type-written, printed or electronically made, and resulting in a permanent record; and
e) the word "tender" is synonymous with "tender" and "tenderer" with "Tenderer" and the words "tender documents" with "tendering documents."

1.3 Communications

1.3.1 Wherever these Conditions provide for the giving or issuing of approvals, certificates, consents, determinations, notices, requests and discharges, these communications shall be:

a) In writing and delivered by hand (against receipt), sent by mail or courier, or transmitted using any of the agreed systems of electronic transmission as stated in the **SCC**; and
b) delivered, sent or transmitted to the address for the recipient's communications as stated in the **SCC**. However:
    i) if the recipient gives notice of another address, communications shall thereafter be delivered accordingly; and
    ii) if the recipient has not stated otherwise when requesting an approval or consent, it may be sent to the address from which the request was issued.

1.3.2 Approvals, certificates, consents and determinations shall not be unreasonably withheld or delayed. When a certificate is issued to a Party, the certifier shall send a copy to the other Party. When a notice is issued to a Party, by the other Party or the Engineer, a copy shall be sent to the Engineer or the other Party, as the case may be.

1.4 Law and Language

1.4.1 The Contract shall be governed by the **laws of Kenya**.

1.4.2 The ruling language of the Contract shall be the **English Language.**

1.5 Priority of Documents

1.5.1 The documents forming the Contract are to be taken as mutually explanatory of one another. For the purposes of interpretation, the priority of the documents shall be in accordance with the following sequence:

a) The Contract Agreement,
b) theLetterofAcceptance,

c) the Particular Conditions–Part A,
d) the Particular Conditions–Part B
e) the General Conditions of Contract
f) the Form of Tender,
g) the Specifications and Bills of Quantities
h) the Drawings, and
i) the Schedules and any other documents forming part of the Contract.

1.5.2 If an ambiguity or discrepancy is found in the documents, the Engineer shall issue any necessary clarification or instruction.

1.6 Contract Agreement

The Parties shall enter into a Contract Agreement within 14 days after the Contractor receives the Letter of Acceptance, unless the Particular Conditions establish otherwise. The Contract Agreement shall bebasedupon the form annexed to the Particular Conditions. The costs of stamp duties and similar charges (if any) imposed by law in connection with entry into the Contract Agreement shallbe borne by the Procuring Entity.

1.7 Assignment

Neither Party shall assign the whole or any part of the Contract or any benefit or interest in or under the Contract. However, either Party:

a) May assign the whole or any part with the prior agreement of the other Party, at the sole discretion of such other Party, and
b) may, as security in favor of a Procuring Entity or financial institution, assign its right to any moneys due, or to become due, under the Contract.

1.8 Care and Supply of Documents

1.8.1 The Specification and Drawings shall be in the custody and care of the Procuring Entity. Unless otherwise stated in the Contract, two copies of the Contract and of each subsequent Drawing shall be supplied to the Contractor, who may make or request further copies at the cost of the Contractor.

1.8.2 Each of the Contractor's Documents shall be in the custody and care of the Contractor, unless and until taken over by the Procuring Entity. Unless otherwise stated in the Contract, the Contractor shall supply to the Engineer

1.8.3 The Contractor shall keep, on the Site, a copy of the Contract, publications named in the Specification, the Contractor's Documents (if any), the Drawings and Variations and other communications given under the Contract. The Procuring Entity's Personnel shall have the right of access to all these documents at all reasonable times.

1.8.4 If a Party becomes aware of an error or defect in a document which was prepared for use in executing the Works, the Party shall promptly give notice to the other Party of such error or defect.

1.9 Delayed Drawings or Instructions

1.9.1 The Contractor shall give notice to the Engineer whenever the Works are likely to be delayed or disrupted if any necessary drawing or instruction is not issued to the Contractor within a particular time, which shall be reasonable. The notice shall include details of the necessary drawing or instruction, details of why and by when it should be issued, and the nature and amount of the delay or disruption likely to be suffered if it is late.

If the Contractor suffers delay and/or incurs Cost as a result of a failure of the Engineer to issue the notified drawing or instruction within a time which is reasonable and is specified in the notice with supporting details, the Contractor shall give a further notice to the Engineer and shall be entitled subject to Sub-Clause 20.1 [Contractor's Claims] to:

a) an extension of time for any such delay, if completion is or will be delayed, under Sub-Clause 8.4 [Extension of Time for Completion], and
b) payment of any such Cost-plus profit, which shall be included in the Contract Price.

1.9.2 After receiving this further notice, the Engineer shall proceed in accordance with Sub-Clause 3.5 [Determinations] to agree or determine these matters.

1.9.3 However, if and to the extent that the Engineer's failure was caused by any error or delay by the Contractor, including an error in, or delay in the submission of, any of the Contractor's Documents, the Contractor shall not be entitled to such extension of time, Cost or profit.

1.10 Procuring Entity's Use of Contractor's Documents

1.10.1 As between the Parties, the Contractor shall retain the copyright and other intellectual property rights in the Contractor's Documents and other design documents made by (or on behalf of) the Contractor. The Contractor shall be deemed (by signing the Contract) to give to the Procuring Entity a non-terminable transferable non-exclusive royalty-free license tocopy, use and communicate the Contractor's Documents, including making and using modifications of them. This license shall:

a) apply throughout the actual or intended working life (whichever is longer) of the relevant parts of the Works,

b) entitle any person in proper possession of the relevant part of the Works to copy, use and communicate the Contractor's Documents for the purposes of completing, operating, maintaining, altering, adjusting, repairing and demolishing the Works, and

c) in the case of Contractor's Documents which are in the form of computer programs and other software, permit their use on any computer on the Site and other places as envisaged by the Contract, including replacements of any computers supplied by the Contractor.

1.10.2 The Contractor's Documents and other design documents made by (or on behalf of) the Contractor shall not, without the Contractor's consent, be used, copied or communicated to a third party by (or on behalf of) the Procuring Entity for purposes other than those permitted under this Sub-Clause.

1.11 Contractor's Use of Procuring Entity's Documents

As between the Parties, the Procuring Entity shall retain the copyright and other intellectual property rights in the Specification, the Drawings and other documents made by (or on behalf of) the Procuring Entity. The Contractor may, at his cost, copy, use, and obtain communication of these documents for the purposes of the Contract. They shall not, without the Procuring Entity's consent, be copied, used or communicated to a third party by the Contractor, except as necessary for the purposes of the Contract.

1.12 Confidential Details

The Contractor's and the Procuring Entity's Personnel shall disclose all such confidential and other information as may be reasonably required in order to verify compliance with the Contract and allow its proper implementation.

1.13 Compliance with Laws

The Contractor shall, in performing the Contract, comply with applicable Laws. Unless otherwise stated in the Particular Conditions:

a) The Procuring Entity shall have obtained (or shall obtain) the planning, zoning, building permit or similar permission for the Permanent Works, and any other permissions described in the Specification as having been (or to be) obtained by the Procuring Entity; and the Procuring Entity shall indemnify and hold the Contractor harmless against and from the consequences of any failure to do so; and

b) the Contractor shall give all notices, pay all taxes, duties and fees, and obtain all permits, licenses and approvals, as required by the Laws in relation to the execution and completion of the Works and the remedying of any defects; and the Contractor shall indemnify and hold the Procuring Entity harmless against and from the consequences of any failure to do so, unless the Contractor is impeded to accomplish these actions and shows evidence of its diligence.

1.14 Joint and Several Liability

If the Contractor constitutes (under applicable Laws) a joint venture, consortium or other unincorporated grouping of two or more persons:

a) These persons shall be deemed to be jointly and severally liable to the Procuring Entity for the performance of the Contract;

b) these persons shall notify the Procuring Entity of their leader who shall have authority to bind the Contractor and each of these persons; and

c) the Contractor shall not alter its composition or legal status without the prior consent of the Procuring Entity.

1.15 Inspections and Audit by the Procuring Entity

Pursuant to paragraph 2.2 e. of Appendix B to the General Conditions, the Contractor shall permit and shall cause its subcontractors and sub-consultants to permit, the Procuring Entity and/or persons appointed by the Procuring Entity to inspect the Site and/or the accounts and records relating to the procurement process, selection and/or contract execution, and to have such accounts and records audited by auditors appointed by the Procuring Entity if requested by the Procuring Entity. The Contractor's and its Subcontractors' and sub-consultants' attention is drawn to Sub-Clause15.6 (Fraud and Corruption) which provides, interalia, that acts intended to materially impede the exercise of the Procuring Entity's inspection and audit rights constitute a prohibited practice subject to contract termination (as well as to a determination of ineligibility pursuant to the Procuring Entity's prevailing sanctions procedures).

2. THE PROCURING ENTITY

2.1 Right of Access to the Site

2.1.1 The Procuring Entity shall give the Contractor right of access to, and possession of, all parts of the Site within the time (or times) stated in the **SCC**. The right and possession may not be exclusive to the Contractor. If, under the Contract, the Procuring Entity is required to give (to the Contractor) possession of any foundation, structure, plant or means of access, the Procuring Entity shall do so in the time and manner stated in the Specification. However, the Procuring Entity may withhold any such right or possession until the Performance Security has been received.

2.1.2 If no such time is stated in the **SCC**, the Procuring Entity shall give the Contractor right of access to, and possession of, the Site within such times as required to enable the Contractor to proceed without disruption in accordance with the programme submitted under Sub-Clause 8.3 [Programme].

2.1.3 If the Contractor suffers delay and/or incurs Cost as aresult of a failure by the Procuring Entity to give any such right or possession within such time, the Contractor shall give notice to the Engineer and shall been titled subject toSub-Clause20.1 [Contractor's Claims] to:

a) an extension of time for any such delay, if completion is or will be delayed, under Sub-Clause 8.4 [Extension of Time for Completion], and

b) payment of any such Cost-plus profit, which shall be included in the Contract Price.

2.1.4 After receiving this notice, the Engineer shall proceed in accordance with Sub-Clause3.5 [Determinations]to agree or determine these matters.

2.1.5 However, if and to the extent that the Procuring Entity's failure was caused by any error or delay by the Contractor, including an error in, or delay in the submission of, any of the Contractor's Documents, the Contractor shall not be entitled to such extension of time, Cost or profit.

2.2 Permits, Licenses or Approvals

The Procuring Entity shall provide, at the request of the Contractor, such reasonable assistance as to allow the Contractor to obtain properly:

a) Copies of the Laws of the Country which are relevant to the Contract but are not readily available, and

b) Any permits, licenses or approvals required by the Laws of the Country:

i) Which the Contractor is required to obtain under Sub-Clause 1.13 [Compliance with Laws],
ii) For the delivery of Goods, including clearance through customs, and
iii) For the export of Contractor's Equipment when it is removed from the Site.

23 Procuring Entity's Personnel

The Procuring Entity shall be responsible for ensuring that the Procuring Entity's Personnel and the Procuring Entity's other contractors on the Site:

a) co-operate with the Contractor's efforts under Sub-Clause 4.6 [Co-operation], and

b) take actions similar to those which the Contractor is required to take under sub-paragraphs (a), (b) and (c) of Sub-Clause 4.8 [Safety Procedures] and under Sub-Clause 4.18 [Protection of the Environment].

24 Procuring Entity's Financial Arrangement

24.1 The Procuring Entity shall submit, before the Commencement Date and there after within 30 days after receiving any request from the Contractor, reasonable evidence that financial arrangements have been made and are being maintained which will enable the Procuring Entity to pay the Contract Price punctually (as estimated at that time) in accordance with Clause 14 [Contract Price and Payment]. Before the Procuring Entity makes any material change to his financial arrangements, the Procuring Entity shall give notice to the Contractor with detailed particulars.

24.2 In addition, if the Procuring Entity has notified to the Contractor that the Procuring Entity has suspended disbursements under its loan, which finances in whole or in part the execution of the Works, the Procuring Entity shall give notice of such suspension to the Contractor with detailed particulars, including the date of such notification, with a copy to the 2.4.3 Engineer, within 7 days of the Procuring Entity having received the suspension notification from the Procuring Entity. If alternative funds will be available in appropriate currencies to the Procuring Entity to continue making payments to the Contractor beyond a date 60 day after the date of Procuring Entity notification of the suspension, the Procuring Entity shall provide reasonable evidence in his notice of the extent to which such funds will be available.

25 Procuring Entity's Claims

25.1 If the Procuring Entity considers itself to be entitled to any payment under any Clause of these Conditions or otherwise in connection with the Contract, and/or to any extension of the Defects Notification Period, the Procuring Entity or the shall give notice and particulars to the Contractor. However, notice is not required for payments due under Sub-Clause 4.19 [Electricity, Water and Gas], under Sub-Clause 4.20 [Procuring Entity's Equipment and Free-Issue Materials], or for other services requested by the Contractor.

25.2 The notice shall be given as soon as practicable and no longer than 30 days after the Procuring Entity became aware, or should have become aware, of the event or circumstances giving rise to the claim. A notice relating to any extension of the Defects Notification Period shall be given before the expiry of such period.

25.3 The particulars shall specify the Clause or other basis of the claim and shall include substantiation of the amount and/or extension to which the Procuring Entity considers itself to be entitled in connection with the Contract. The Engineer shall then proceed in accordance with Sub-Clause 3.5 [Determinations] to agree or determine (i) the amount (if any) which the Procuring Entity is entitled to be paid by the Contractor, and/or(ii) the extension (if any) of the Defects Notification Period in accordance with Sub-Clause 11.3 [Extension of Defects Notification Period].

3. THE ENGINEER

31 Engineer's Duties and Authority

31.1 The Procuring Entity shall appoint the Engineer who shall carry out the duties assigned to him in the Contract. The Engineer's staff shall include suitably qualified engineers and other professionals who are competent to carry out these duties.

The Engineer shall have no authority to amend the Contract.
The Engineer may exercise the authority attributable to the Engineer as specified in or necessarily to be implied from the Contract. If the Engineer is required to obtain the approval of the Procuring Entity before exercising a

specified authority, the requirements shall be as stated in the Particular Conditions. The Procuring Entity shall promptly inform the Contractor of any change to the authority attributed to the Engineer.

3.1.2 However, whenever the Engineer exercises a specified authority for which the Procuring Entity's approval is required, then (for the purposes of the Contract) the Procuring Entity shall be deemed to have given approval. Except as otherwise stated in these Conditions:

a) Whenever carrying out duties or exercising authority, specified in or implied by the Contract, the Engineer shall be deemed to act for the Procuring Entity; the Engineer has no authority to relieve either Party of any duties, obligations or

b) any approval, check, certificate, consent, examination, inspection, instruction, notice, proposal, request, test, or similar act by the Engineer (including absence of disapproval) shall not relieve the Contractor from any responsibility he has under the Contract, including responsibility for errors, omissions, discrepancies and non-compliances; and

c) any act by the Engineer in response to a Contractor's request except as otherwise expressly specified shall be notified in writing to the Contractor within 14 days of receipt.

3.1.2 The following provisions shall apply; The Engineer shall obtain the specific approval of the Procuring Entity before taking action under the-following Sub-Clauses of these Conditions:

a) Sub-Clause 4.12: agreeing or determining an extension of time and/or additional cost.

b) Sub-Clause13.1: instructing a Variation, except;

i) In an emergency situation as determined by the Engineer, or

ii) If such a Variation would increase the Accepted Contract Amount by less than the percentage specified in the **SCC**.

c) Sub-Clause13.3: Approving a proposal for Variation submitted by the Contractor in accordance with Sub Clause13.1or13.2.

d) Sub-Clause13.4: Specifying the amount payable in each of the applicable currencies.

3.1.3 Notwithstanding the obligation, as set out above, to obtain approval, if, in the opinion of the Engineer, an emergency occurs affecting the safety of life or of the Works or of adjoining property, he may, without relieving the Contractor of any of his duties and responsibility under the Contract, instruct the Contract or to execute all such work or to do all such things as may, in the opinion of the Engineer, be necessary to abate or reduce the risk. The Contractor shall forthwith comply, despite the absence of approval of the Procuring Entity, with any such instruction of the Engineer. The Engineer shall determine an addition to the Contract Price, in respect of such instruction, in accordance with Clause 13 and shall notify the Contractor accordingly, with a copy to the Procuring Entity.

3.2 Delegation by the Engineer

3.2.1 The Engineer may from time to time assign duties and delegate authority to assistants, and may also revoke such assignment or delegation. These assistants may include a resident engineer, and/or independent inspectors appointed to inspect and/or test items of Plant and/or Materials. The assignment, delegation or revocation shall be in writing and shall not take effect until copies have been received by both Parties. However, unless otherwise agreed by both Parties, the Engineer shall not delegate the authority to determine any matter in accordance with Sub-Clause3.5 [Determinations].

3.2.2 Each assistant, to whom duties have been assigned or authority has been delegated, shall only be authorized to issue instructions to the Contractor to the extent defined by the delegation. Any approval, check, certificate, consent, examination, inspection, instruction, notice, proposal, request, test, or similar act by an assistant, in accordance with the delegation, shall have the same effect as though the act had been an act of the Engineer. However:

a) Any failure to disapprove any work, Plant or Materials shall not constitute approval, and shall therefore not prejudice the right of the Engineer to reject the work, Plant or Materials;

b) if the Contractor questions any determination or instruction of an assistant, the Contractor may refer the matter to the Engineer, who shall promptly confirm, reverse or vary the determination or instruction.

3.3 Instructions of the Engineer

3.3.1 The Engineer may issue to the Contractor (at any time) instructions and additional or modified Drawings which may be necessary for the execution of the Works and the remedying of any defects, all in accordance with the

Contract. The Contractor shall only take instructions from the Engineer, or from an assistant to whom the appropriate authority has been delegated under this Clause. If an instruction constitutes a Variation, Clause 13 [Variations and Adjustments] shall apply.

3.3.2 The Contractor shall comply with the instructions given by the Engineer or delegated assistant, on anymatter related to the Contract. Whenever practicable, their instructions shall be given in writing. If the Engineer or a delegated assistant:

a) Gives an oral instruction,
b) receives a written confirmation of the instruction, from (or on behalf of) theContractor, within two working days after giving the instruction, and
c) does not reply by issuing a written rejection and/or instruction within two working days after receiving the confirmation, then the confirmation shall constitute the written instruction of the Engineeror delegated assistant (as the case may be).

3.4 Replacement of the Engineer

3.4.1 If the Procuring Entity intends to replace the Engineer, the Procuring Entity shall, not less than 21 days before the intended date of replacement, give notice to the Contractor of the name, address and relevant experience of the intended replacement Engineer. If the Contractor considers the intended replacement Engineer to be unsuitable, he has the right to raise objection against him by notice to the Procuring Entity, with supporting particulars, and the Procuring Entity shall give full and fair consideration to this objection.

3.5 Determinations

3.5.1 Whenever these Conditions provide that the Engineer shall proceed in accordance with this Sub-Clause 3.5 to agree or determine any matter, the Engineer shall consult with each Party in an endeavor to reach agreement. If agreement is not achieved, the Engineer shall make a fair determination in accordance with the Contract, taking due regard of all relevant circumstances.

3.5.2 The Engineer shall give notice to both Parties of each agreement or determination, with supporting particulars, within 30 days from the receipt of the corresponding claim or request except when otherwise specified. Each Party shall give effect to each agreement or determination unless and until revised under Clause 20 [Claims, Disputes and Arbitration].

4. THE CONTRACTOR

4.1 Contractor's General Obligations

4.1.1 The Contractor shall design (to the extent specified in the Contract), execute and complete the Works in accordance with the Contract and with the Engineer's instructions, and shall remedy any defects in the Works.

4.1.2 The Contractor shall provide the Plant and Contractor's Documents specified in the Contract, and all Contractor's Personnel, Goods, consumables and other things and services, whether of a temporary or permanent nature, required in and for this design, execution, completion and remedying of defects.

4.1.3 All equipment, material, and services to be incorporated in or required for the Works shall have their origin in any eligible source country as defined by the Procuring Entity.

4.1.4 The Contractor shall be responsible for the adequacy, stability and safety of all Site operations and of all methods of construction. Except to the extent specified in the Contract, the Contractor (i) shall be responsible for all Contractor's Documents, Temporary Works, and such design of each item of Plant and Materials as is required for the item to be in accordance with the Contract, and (ii) shall not otherwise be responsible for the design or specification of the Permanent Works.

4.1.5 The Contractor shall, whenever required by the Engineer, submit details of the arrangements and methods which the Contractor proposes to adopt for the execution of the Works. No significant alteration to these arrangements and methods shall be made without this having previously been notified to the Engineer.

4.1.6 The Contractor shall not commence any Works, including mobilization and/or pre-construction activities (e.g. limited clearance for haul roads, site accesses and work site establishment, geotechnical investigations or investigations to select ancillary features such as quarries and borrowpits), unless the Engineer is satisfied that appropriate measures are in place to address environmental, social, health and safety risks and impacts.

4.1.7 If the Contract specifies that the Contract or shall design any part of the Permanent Works, then unless otherwise stated in the Particular Conditions:

a) The Contractor shall submit to the Engineer the Contractor's Documents for this part in accordance with the procedures specified in the Contract;

b) These Contractor's Documents shall be in accordance with the Specification and Drawings, shall be written in the language for communications defined in Sub-Clause 1.4 [Law and Language], and shall include additional information required by the Engineer to add to the Drawings for co-ordination of each Party's designs;

c) The Contractor shall be responsible for this part and it shall, when the Works are completed, be fit for such purposes for which the part is intended as are specified in the Contract; and

d) Prior to the commencement of the Tests on Completion, the Contractor shall submit to the Engineer the "as- built" documents and, if applicable, operation and maintenance manuals in accordance with the Specification and insufficient detail for the Procuring Entity to operate, maintain, dismantle, reassemble, adjust and repair this part of the Works. Such part shall not be considered to be completed for thev purposes of taking-over under Sub-Clause 10.1 [Taking Over of the Works and Sections] until these documents and manuals have been submitted to the Engineer.

4.2 Performance Security

4.2.1 Performance security shall not be required for contracts estimated to cost less than Kenya shillings five million shillings.

4.2.2 The Contractor shall obtain (at his cost) a Performance Security for proper performance, in the amount stated in the **SCC** and denominated in the currency (ies) of the Contractor in a freely convertible currency acceptable to the Procuring Entity. If an amount is not stated in the **SCC,** this Sub-Clause shall not apply.

4.2.3 The Contractor shall deliver the Performance Security to the Procuring Entity within 14 days after receiving the Letter of Acceptance and shall send a copy to the Engineer. The Performance Security shall be issued by a reputable Procuring Entity or financial institution selected by the Contract or and shall be in the form annexed to the Particular Conditions, as stipulated by the Procuring Entity in the **SCC**, or in another form approved by the Procuring Entity.

4.2.4 The Contractor shall ensure that the Performance Security is valid and enforceable until the Contractor has executed and completed the Works and remedied any defects. If the terms of the Performance Security specify its expiry date, and the Contractor has not become entitled to receive the Performance Certificate by the date 30 days prior to the expiry date, the Contractor shall extend the validity of the Performance Security until the Works have been completed and any defects have been remedied.

4.2.5 The Procuring Entity shall not make a claim under the Performance Security, except for amounts to which the Procuring Entity is entitled under the Contract.

The Procuring Entity shall indemnify and hold the Contractor harmless against and from all damages, losses and expenses (including legal fees and expenses) resulting from a claim under the Performance Security to the extent to which the Procuring Entity was not entitled to make the claim.

4.2.6 The Procuring Entity shall return the Performance Security to the Contractor within 21 days after receiving a copy of the Performance Certificate.

4.2.7 Without limitation to the provisions of the rest of this Sub-Clause, whenever the Engineer determines an addition or are duction to the Contract Price as a result of a change in cost and/or legislation, or as a result of a Variation, amounting to more than 25 percent of the portion of the Contract Price payable in a specific currency, the Contractor shall at the Engineer's request promptly increase, or may decrease, as the case may be, the value of the Performance Security in that currency by an equal percentage.

4.3 Contractor's Representative

4.3.1 The Contractor shall appoint the Contractor's Representative and shall give him all authority necessary to act on the Contractor's behalf under the Contract.

Unless the Contractor's Representative is named in the Contract, the Contractor shall, prior to the Commencement Date, submit to the Engineer for consent the name and particulars of the person the Contractor proposes to appoint as Contractor's Representative. If consent is withheld or subsequently revoked interms of Sub-Clause 6.9 [Contractor's Personnel], or if the appointed person fails to act as Contractor's Representative, the Contractor shall similarly submit the name and particulars of another suitable person for such appointment.

The Contractor shall not, without the prior consent of the Engineer, revoke the appointment of the Contractor's Representative or appoint a replacement.

4.3.2 The whole time of the Contractor's Representative shall be given to directing the Contractor's performance of the Contract. If the Contractor's Representative is to be temporarily absent from the Site during the execution of the Works, a suitable replacement person shall be appointed, subject to the Engineer's prior consent, and the Engineer shall be notified accordingly.

4.3.3 The Contractor's Representative shall, on behalf of the Contractor, receive instructions under Sub-Clause 3.3 [Instructions of the Engineer].

The Contractor's Representative may delegate any powers, functions and authority to any competent person, and may at anytime revoke the delegation. Any delegation or revocation shall not take effect until the Engineer has received prior notice signed by the Contractor's Representative, naming the person and specifying the powers, functions and authority being delegated or revoked.

4.3.4 The Contractor's Representative shall be fluent in the language for communications defined in Sub-Clause1.4 [Law and Language]. If the Contractor's Representative's delegates are not fluent in the said language, the Contractor shall make competent interpreters available during all working hours in a number deemed sufficient by the Engineer.

4.4 Subcontractors

4.4.1 The Contractor shall not subcontract the whole of the Works.

The Contractor shall be responsible for the acts or defaults of any Subcontractor, his agents or employees, as if they were the acts or defaults of the Contractor. Unless otherwise stated in the Particular Conditions:

a) The Contractor shall not be required to obtain consent to suppliers solely of Materials, or to a subcontract for which the Subcontractor is named in the Contract;

b) The prior consent of the Engineer shall be obtained to other proposed Sub contractors;

c) the Contractor shall give the Procuring entity not less than 14 days' notice of the intended date of the commencement of each Subcontractor's work, and of the commencement of such work on the Site; and

d) each subcontract shall include provisions which would entitle the Procuring Entity to require the subcontract to be assigned to the Procuring Entity under Sub-Clause 4.5 [Assignment of Benefit of Subcontract] (if or when applicable) or in the event of termination under Sub-Clause15.2 [Termination by Procuring Entity].

4.4.2 The Contractor shall ensure that the requirements imposed on the Contractorby Sub-Clause 1.12 [Confidential Details] apply equally to each Subcontractor.

4.4.3 Where practicable, the Contractor shall give fair and reasonable opportunity for contractors from the Country to be appointed as Subcontractors.

4.5 Assignment of Benefit of Subcontract

If a Subcontractor's obligations extend beyond the expiry date of the relevant Defects Notification Period and the Engineer, prior to this date, instructs the Contractor to assign the benefit of such obligations to the Procuring Entity, then the Contractor shall do so. Unless otherwise stated in the assignment, the Contractor shall have no liability to the Procuring Entity for the work carried out by the Subcontractor after the assignment takes effect.

4.6 Co-operation

4.6.1 The Contractor shall, as specified in the Contract or as instructed by the Engineer, allow appropriate opportunities for carrying out work to:
a) The Procuring Entity's Personnel,
b) Any other contractors employed by the Procuring Entity, and
c) The personnel of any legally constituted public authorities, who may be employed in the execution on or near the Site of any work not included in the Contract.

4.6.2 Any such instruction shall constitute a Variation if and to the extent that it causes the Contractor to suffer delays and/or to incur Unforeseeable Cost. Services for these personnel and other contractors may include the use of Contractor's Equipment, Temporary Works or access arrangements which are the responsibility of the Contractor.

If, under the Contract, the Procuring Entity is required to give to the Contractor possession of any foundation, structure, plant or means of access in accordance with Contractor's Documents, the Contractor shall submit such documents to the Engineer in the time and manner stated in the Specification.

4.7 Setting Out

4.7.1 The Contractor shall set out the Works in relation to original points, lines and levels of reference specified in the Contractor notified by the Engineer. The Contractor shall be responsible for the correct positioning of all parts of the Works, and shall rectify any error in the positions, levels, dimensions or alignment of the Works.

The Procuring Entity shall be responsible for any errors in these specified or notified items of reference, but the Contractor shall use reasonable efforts to verify their accuracy before they are used.

4.7.2 If the Contractor suffers delay and/or incurs Cost from executing work which was necessitated by an error in these items of reference, and an experienced contractor could not reasonably have discovered such error and avoided this delay and/or Cost, the Contractor shall give notice to the Engineer and shall be entitled subject to Sub-Clause 20.1 [Contractor's Claims] to:
a) an extension of time for any such delay, if completion is or will be delayed, under Sub-Clause 8.4 [Extension of Time for Completion], and
b) payment of any such Cost-plus profit, which shall be included in the Contract Price.

4.7.3 After receiving this notice, the Engineer shall proceed in accordance with Sub-Clause 3.5 [Determinations] to agree or determine (i) whether and (if so) to what extent the error could not reasonably have been discovered, and (ii) the matters described in sub-paragraphs (a) and (b) above related to thise.

4.8 Safety Procedures

The Contractor shall:
a) Comply with all applicable safety regulations,
b) Take care for the safety of all persons entitled to be on the Site,
c) Use reasonable efforts to keep the Site and Works clear of unnecessary obstructions as to avoid danger to these persons,
d) provide fencing, lighting, guarding and watching of the Works until completion and taking over under Clause10 [Procuring Entity's Taking Over], and
e) provide any Temporary Works (including roadways, footways, guards and fences) which may be necessary, because of the execution of the Works, for the use and protection of the public and of owners and occupiers of adjacent land.

4.9 Quality Assurance

The Contractor shall institute a quality assurance system to demonstrate compliance with the requirementsof the Contract. The system shall be in accordance with the details stated in the Contract. The Engineer shall be entitled to audit any aspect of the system.

Details of all procedures and compliance documents shall be submitted to the Engineer for information before each design and execution stage is commenced. When any document of a technical nature is issued to the Engineer, evidence of the prior approval by the Contractor itself shall be apparent on the document

itself. Compliance with the quality assurance system shall not relieve the Contractor of any of his duties, obligations or responsibilities under the Contract.

4.10 Site Data

The Procuring Entity shall have made available to the Contractor for his information, prior to the Base Date, all relevant data in the Procuring Entity's possession on sub-surface and hydrological conditions at the Site, including environmental aspects. The Procuring Entity shall similarly make available to the Contract or all such data which come into the Procuring Entity's possession after the Base Date. The Contractor shall be responsible for interpreting all such data.

To the extent which was practicable (taking account of cost and time), the Contractor shall be deemed to have obtained all necessary information as to risks, contingencies and other circumstances which may influence or affect the Tender or Works. To the same extent, the Contractor shall be deemed to have inspected and examined the Site, its surroundings, the above data and other available information, and to have been satisfied before submitting the Tender as to all relevant matters, including (without limitation):

a) The form and nature of the Site, including sub-surface conditions,
b) The hydrological and climatic conditions,
c) The extent and nature of the work and Goods necessary for the execution and completion of the Works and the remedying of any defects,
d) The Laws, procedures and labor practices of the Country, and
e) The Contractor's requirements for access, accommodation, facilities, personnel, power, transport, water and other services.

4.11 Sufficiency of the Accepted Contract Amount

4.11.1 The Contractor shall be deemed to:

a) Have satisfied itself as to the correctness and sufficiency of the Accepted Contract Amount, and
b) Have based the Accepted Contract Amount on the data, interpretations, necessary information, inspections, examinations and satisfaction as to all relevant matters referred to in Sub-Clause 4.10 [Site Data].

4.11.2 Unless otherwise stated in the Contract, the Accepted Contract Amount covers all the Contractor's obligations under the Contract (including those under Provisional Sums, if any) and all things necessary for the proper execution and completion of the Works and the remedying of any defects.

4.12 Unforeseeable Physical Conditions

4.12.1 In this Sub-Clause, "physical conditions" means natural physical conditions and man-made and other physical obstructions and pollutants, which the Contractor encounters at the Site when executing the Works, including sub-surface and hydrological conditions but excluding climatic conditions.

4.12.2 If the Contractor encounters adverse physical conditions which he considers to have been Unforeseeable, the Contractorshallgivenoticetothe Engineerassoonaspracticable.

This notice shall describe the physical conditions, so that they can be inspected by the Engineer, and shall set out the reasons why the Contractor considers them to be Unforeseeable. The Contractor shall continue executing the Works, using such proper and reasonable measures as are appropriate for the physical conditions, and shall comply with any instructions which the Engineer may give. If an instruction constitutes a Variation, Clause 13 [Variations and Adjustments] shall apply.

4.12.3 If and to the extent that the Contractor encounters physical conditions which are Unforeseeable, gives such a notice, and suffers delay and/or incurs Cost due to these conditions, the Contractor shall be entitled subject to notice under Sub-Clause 20.1 [Contractor's Claims] to:

a) An extension of time for any such delay, if completion is or will be delayed, under Sub-Clause 8.4 [Extension of Time for Completion], and
b) Payment of any such Cost, which shall be included in the Contract Price.

4.12.4 Upon receiving such notice and inspecting and/or investigating these physical conditions, the Engineer shall proceed in accordance with Sub-Clause 3.5 [Determinations] to agree or determine (i) whether and (if so) to what extent these physical conditions were Unforeseeable, and (ii) the matters described in sub-paragraphs (a) and (b) above related to this extent.

4.12.5 However, before additional Cost is finally agreed or determined under sub-paragraph (ii), the Engineer may also review whether other physical conditions in similar parts of the Works (if any) were more favorable than could reasonably have been foreseen when the Contractor submitted the Tender. If and to the extent that thesemore favorable conditions were encountered, the Engineer may proceed in accordance with Sub-Clause 3.5 [Determinations] to agree or determine the reductions in Cost which were due to these conditions, which may be included (as deductions) in the Contract Price and Payment Certificates. However, the net effect of all adjustments under sub-paragraph (b) and all these reductions, for all the physical conditions encountered in similar parts of the Works, shall not result in any reduction in the Contract Price.

4.12.6 The Engineer shall take account of any evidence of the physical conditions foreseen by the Contractor when submitting the Tender, which shall be made available by the Contractor, but shall not be bound by the Contractor's interpretation of any such evidence.

4.13 Rights of Way and Facilities

Unless otherwise specified in the Contract the Procuring Entity shall provide effective access to and possession of the Site including special and/or temporary rights-of-way which are necessary for the Works. The Contractor shall obtain, at his risk and cost, any additional rights of way or facilities outside the Site which he may require for the purposes of the Works.

4.14 Avoidance of Interference

The Contractor shall not interfere unnecessarily or improperly with:

a) The convenience of the public, or
b) The access to and use and occupation of all roads and footpaths, irrespective of whether they are public or in the possession of the Procuring Entity or of others.

The Contractor shall indemnify and hold the Procuring Entity harmless against and from all damages, losses and expenses (including legal fees and expenses) resulting from any such unnecessary or improper interference.

4.15 Access Route

TheContractorshallbedeemedtohavebeensatisfiedastothesuitabilityandavailabilityofaccessroutestothe SiteatBaseDate.TheContractorshallusereasonableeffortstopreventanyroadorbridgefrombeingdamaged by the Contractor's traffic or by the Contractor's Personnel. These efforts shall include the proper use of appropriatevehiclesandroutes.

Except as otherwise stated in these Conditions:

a) The Contractor shall (as between the Parties) be responsible for any maintenance which may be required for his use of access routes;
b) the Contractor shall provide all necessary signs or directions along access routes, and shall obtain any permission which may be required from the relevant authorities for his use of routes, signs and directions;
c) the Procuring Entity shall not be responsible for any claims which may arise from the use or otherwise of any access route;
d) the Procuring Entity does not guarantee the suitability or availability of particular access routes; and
e) Costs due to non-suitability or non-availability, for the use required by the Contractor, of access routes shall be borne by the Contractor.

4.16 Transport of Goods

Unless otherwise stated in the Particular Conditions:

a) The Contractor shall give the Engineer not less than 21 days' notice of the date on which any Plant or a major item of other Goods will be delivered to the Site;
b) the Contractor shall be responsible for packing, loading, transporting, receiving, unloading, storing and protecting all Goods and other things required for the Works; and
c) the Contractor shall indemnify and hold the Procuring Entity harmless against and from all damages, losses and expenses (including legal fees and expenses) resulting from the transport of Goods, and shall negotiate and pay all claims arising from their transport.

4.17 Contractor's Equipment

The Contractor shall be responsible for all Contractor's Equipment. When brought onto the Site, Contractor's Equipment shall be deemed to be exclusively intended for the execution of the Works. The Contractor shall not remove from the Site any major items of Contractor's Equipment without the consent of the Engineer. However, consent shall not be required for vehicles transporting Goods or Contractor's Personnel off Site.

4.18 Protection of the Environment

The Contractor shall take all reasonable steps to protect the environment (both on and off the Site) and to limit damage and nuisance to people and property resulting from pollution, noise and other results of his operations.

The Contractor shall ensure that emissions, surfaced is charges and effluent from the Contractor's activities shall not exceed the values stated in the Specification or prescribed by applicable Laws.

4.19 Electricity, Water and Gas

4.19.1 The Contractor shall, except as stated below, be responsible for the provision of all power, water and other services he may require for his construction activities and to the extent defined in the Specifications, for the tests.

The Contractor shall be entitled to use for the purposes of the Works such supplies of electricity, water, gas and other services as may be available on the Site and of which details and prices are given in the Specification. The Contractor shall, at his risk and cost, provide any apparatus necessary for his use of these services and for measuring the quantities consumed.

4.19.2 The quantities consumed and the amounts due (at these prices) for such services shall be agreed or determined by the Engineer in accordance with Sub-Clause 2.5 [Procuring Entity's Claims] and Sub-Clause 3.5 [Determinations]. The Contractor shall pay these amounts to the Procuring Entity.

4.20 Procuring Entity's Equipment and Free-Issue Materials

4.20.1 The Procuring Entity shall make the Procuring Entity's Equipment (if any) available for the use of the Contractor in the execution of the Works in accordance with the details, arrangements and prices stated in the Specification. Unless otherwise stated in the Specification:

a) The Procuring Entity shall be responsible for the Procuring Entity's Equipment, except that

b) the Contractor shall be responsible for each item of Procuring Entity's Equipment whilst any of the Contractor's Personnel is operating it, driving it, directing it or in possession or control of it.

4.20.2 The appropriate quantities and the amounts due (at such stated prices) for the use of Procuring Entity's Equipment shall be agreed or determined by the Engineer in accordance with Sub-Clause 2.5 [Procuring Entity's Claims] and Sub-Clause 3.5 [Determinations]. The Contractor shall pay these amounts to the Procuring Entity.

The Procuring Entity shall supply, free of charge, the “free-issue materials” (if any) in accordance with the details stated in the Specification. The Procuring Entity shall, at his risk and cost, provide these materialsc at the time and place specified in the Contract. The Contractor shall then visually inspect them and shall promptly give notice to the Engineer of any shortage, defect or default in these materials. Unless otherwise agreed by both Parties, the Procuring Entity shall immediately rectify the notified shortage, defect or default.

4.20.3 After this visual inspection, the free-issue materials shall come under the care, custody and control of the Contractor.The Contractor's obligations of inspection, care, custody and control shall not relieve the Procuring Entity of liability for any shortage, defect or default not apparent froma visual inspection.

4.21 Progress Reports

4.21.1 Unless otherwise stated in the Particular Conditions, monthly progress reports shall be prepared by the Contractor and submitted to the Engineer in six copies. The first report shall cover the period upto the end of the first calendar month following the Commencement Date. Reports shall be submitted monthly thereafter, each within 7 days after the last day of the period to which it relates.

4.21.2 Reporting shall continue until the Contractor has completed all work which is known to be outstanding at the completion date stated in the Taking-Over Certificate for the Works.

Each report shall include:

a) charts and detailed descriptions of progress, including each stage of design (if any), Contractor's Documents, procurement, manufacture, delivery to Site, construction, erection and testing; andincluding these stages for work by each nominated Subcontractor (as defined in Clause 5 [Nominated Subcontractors]),
b) photographs showing the status of manufacture and of progress on the Site;
c) for the manufacture of each main item of Plant and Materials, the name of the manufacturer, manufacture location, percentage progress, and the actual or expected dates of:
   i) commencement of manufacture,
   ii) Contractor's inspections,
   iii) tests, and
   iv) shipment and arrival at the Site;
d) the details described in Sub-Clause 6.10 [Records of Contractor's Personnel and Equipment];
e) copies of quality assurance documents, test results and certificates of Materials;
f) list of notices given under Sub-Clause 2.5 [Procuring Entity's Claims] and notices given under Sub-Clause 20.1 [Contractor's Claims];
g) safety statistics, including details of any hazardous incidents and activities relating to environmental aspects and public relations; and
h) comparisons of actual and planned progress, with details of any events or circumstances which may jeopardize the completion in accordance with the Contract, and the measures being (or to be) adopted to overcome delays.

4.21.3 The Contractor shall provide immediate notification to the Engineer of incidents in the following categories. Full details of such incidents shall be provided to the Engineer within the time frame agreed with the Engineer.

a) confirmed or likely violation of any law or international agreement;
b) any fatality or serious injury;
c) significant adverse effects or damage to private property (e.g. vehicle accident, damage from fly rock, working beyond the boundary);
d) major pollution of drinking water aquifer or damage or destruction of rare or endangered habitat (including protected areas) or species; or
e) any allegation of sexual harassment or sexual misbehavior, child abuse, defilement, or other violations involving children.

4.22 Security of the Site

Unless otherwise stated in the Particular Conditions:

a) The Contractor shall be responsible for keeping unauthorized persons off the Site, and
b) Authorized persons shall be limited to the Contractor's Personnel and the Procuring Entity's Personnel; and to any other personnel notified to the Contractor, by the Procuring Entity or the Engineer, as authorized personnel of the Procuring Entity's other contractors on the Site.

4.23 Contractor's Operations on Site

4.23.1 The Contractor shall confine his operations to the Site, and to any additional areas which may be obtained by the Contractor and agreed by the Engineer as additional working areas. The Contractor shall take all necessary precautions to keep Contractor's Equipment and Contractor's Personnel within the Site and these additional areas, and to keep them off adjacent land.

During the execution of the Works, the Contractor shall keep the Site free from all unnecessary obstruction and shall store or dispose of any Contractor's Equipment or surplus materials. The Contractor shall clear away and remove from the Site any wreckage, rubbish and Temporary Works which are no longer required.

4.23.2 Upon the issue of a Taking-Over Certificate, the Contractor shall clear away and remove, from that part of the Site and Works to which the Taking-Over Certificate refers, all Contractor's Equipment, surplus material, wreckage, rubbish and Temporary Works. The Contractor shall leave that part of the Site and the Works in a clean and safe condition. However, the Contractor may retain on Site, during the Defects Notification Period, such Goods as are required for the Contractor to fulfil obligations under the Contract.

4.24 Fossils

All fossils, coins, articles of value or antiquity, and structures and other remains or items of geological or archaeological interest found on the Site shall be placed under the care and authority of the Procuring Entity. The Contractor shall take reasonable precautions to prevent Contractor's Personnel or other persons from removing or damaging any of these findings.

The Contractor shall, upon discovery of any such finding, promptly give notice to the Engineer, who shall issue instructions for dealing with it. If the Contractor suffers delay and/or incurs Cost from complying with the instructions, the Contractor shall give a further notice to the Engineer and shall be entitled subject to Sub-Clause
20.1 [Contractor's Claims] to:

a) an extension of time for any such delay, if completion is or will be delayed, under Sub-Clause 8.4 [Extension of Time for Completion], and
b) payment of any such Cost, which shall be included in the Contract Price.

After receiving this further notice, the Engineer shall proceed in accordance with Sub-Clause 3.5 [Determinations] to agree or determine these matters.

5. NOMINATED SUB CONTRACTORS

5.1 Definition of "nominated Subcontractor

In the Contract, "nominated Subcontractor" means a Subcontractor:

a) Who is stated in the Contract as being a nominated Subcontractor, or
b) whom the Engineer, under Clause 13 [Variations and Adjustments], instructs the Contractor to employ as a Subcontractor subject to Sub-Clause 5.2 [Objection to Notification].

5.2 Objection to Nomination

The Contractor shall not be under any obligation to employ a nominated Subcontractor against whom the Contractor raises reasonable objection by notice to the Engineer as soon as practicable, with supporting particulars. An objection shall be deemed reasonable if it arises from (among other things) any of the following matters, unless the Procuring Entity agrees in writing to indemnify the Contractor against and from the consequences of the matter:

a) there are reasons to believe that the Subcontractor does not have sufficient competence, resources or financial strength;
b) the nominated Subcontract or does not accept to indemnify the Contractor against and from any negligence or misuse of Goods by the nominated Subcontractor, his agents and employees; or
c) the nominated Subcontractor does not accept to enter into a subcontract which specifies that, for the subcontracted work (including design, if any), the nominated Subcontract or shall:
    i) undertake to the Contractor such obligations and liabilities as will enable the Contractor to discharge his obligations and liabilities under the Contract;
    ii) indemnify the Contractor against and from all obligations and liabilities arising under or in connection with the Contract and from the consequences of any failure by the Subcontractor to perform these obligations or to fulfil these liabilities, and
    iii) be paid only if and when the Contractor has received from the Procuring Entity payments for sums due under the Subcontract referred to under Sub-Clause 5.3 [Payment to nominated Subcontractors]
    .

5.3 Payments to nominated Subcontractors

The Contractor shall pay to the nominated Subcontractor the amounts shown on the nominated Subcontractor's invoices approved by the Contractor which the Engineer certifies to be due in accordance with the subcontract. These amounts plus other charges shall be included in the Contract Price in accordance with sub-paragraph (b) of Sub-Clause 13.5 [Provisional Sums], except as stated in Sub-Clause 5.4 [Evidence of Payments].

5.4 Evidence of Payments

Before issuing a Payment Certificate which includes an amount payable to a nominated Subcontractor, the Engineer may request the Contractor to supply reasonable evidence that the nominated Subcontractor hasreceived all amounts due in accordance with previous Payment Certificates, less applicable deductions for retention or otherwise. Unless the Contractor:

a) Submits this reasonable evidence to the Engineer, or

b) i) satisfies the Engineer in writing that the Contractor is reasonably entitled to withhold or refuse to pay these amounts, and

ii) submits to the Engineer reasonable evidence that the nominated Subcontractor has been notified of the Contractor's entitlement, then the Procuring Entity may (at his sole discretion) pay, direct to the nominated Subcontractor, partor all of such amounts previously certified (less applicable deductions) as are due to the nominated Subcontractor and for which the Contractor has failed to submit the evidence described in sub-paragraphs (a) or (b) above. The Contractor shall then repay, to the Procuring Entity, the amount which the nominated Subcontractor was directly paid by the Procuring Entity.

6. STAFF AND LABOR

6.1 Engagement of Staff and Labor

Except as otherwise stated in the Specification, the Contractor shall make arrangements for the engagement of all staff and labor, local or otherwise, and for their payment, feeding, transport, and, when appropriate, housing. The Contractor is encouraged, to the extent practicable and reasonable, to employ staff and labor with appropriate qualifications and experience from sources within the Country.

6.2 Rates of Wages and Conditions of Labor

6.2.1 The Contractor shall pay rates of wages, and observe conditions of labor, which are not lower than those established for the trade or industry where the work is carried out. If no established rates or conditions are applicable, the Contractor shall pay rates of wages and observe conditions which are not lower than the general level of wages and conditions observed locally by Procuring Entity's whose trade or industry is similar to that of the Contractor.

6.2.2 The Contractor shall inform the Contractor's Personnel about their liability to pay personal income taxes in Kenya in respect of such of their salaries, wages, allowances and any benefits as are subject to tax under the Laws of Kenya for the time being in force, and the Contractor shall perform such duties in regard to such deductions there of as may be imposed on him by such Laws.

6.3 Persons in the Service of Procuring Entity

The Contractor shall not recruit, or attempt to recruit, staff and labor from amongst the Procuring Entity's Personnel.

6.4 Labor Laws

The Contractor shall comply with all the relevant labor Laws applicable to the Contractor's Personnel, including Laws relating to their employment, health, safety, welfare, immigration and emigration, and shall allow them all their legal rights.

The Contractor shall require his employees to obey all applicable Laws, including those concerning safety at work.

6.5 Working Hours

No work shall be carried out on the Site on locally recognized days of rest, or outside the normal working hours stated in the **SCC**, unless:

a) Otherwise stated in the Contract,
b) The Engineer gives consent, or
c) The work is unavoidable, or necessary for the protection of life or property or for the safety of the Works, in which case the Contractor shall immediately advise the Engineer.

6.6 Facilities for Staff and Labor

Except as otherwise stated in the Specification, the Contractor shall provide and maintain all necessary accommodation and welfare facilities for the Contractor's Personnel. The Contractor shall also provide facilities for the Procuring Entity's Personnel as stated in the Specification.

The Contractor shall not permit any of the Contractor's Personnel to maintain any temporary or permanent living quarters within the structures forming part of the Permanent Works.

6.7 Health and Safety

6.7.1 The Contractor shall at all times take all reasonable precautions to maintain the health and safety of the Contractor's Personnel. In collaboration with local health authorities, the Contractor shall ensure thatmedical staff, first aid facilities, sick bay and ambulance service are available at all times at the Site and at any accommodation for Contractor's and Procuring Entity's Personnel, and that suitable arrangements are made for all necessary welfare and hygiene requirements and for the prevention of epidemics.

6.7.2 The Contractor shall appoint an accident prevention officer at the Site, responsible for maintaining safety and protection against accidents. This person shall be qualified for this responsibility and shall have the authority to issue instructions and take protective measures to prevent accidents. Throughout the execution of the Works, the Contractor shall provide whatever is required by this person to exercise this responsibility and authority.

6.7.3 The Contractor shall send, to the Engineer, details of any accident as soon as practicable after its occurrence. The Contractor shall maintain records and make reports concerning health, safety and welfare of persons, and damage to property, as the Engineer may reasonably require.

6.7.3 HIV-AIDS Prevention. The Contractor shall conduct an HIV-AIDS awareness programme via an approved service provider and shall undertake such other measures as are specified in this Contract to reduce the risk of the transfer of the HIV virus between and among the Contractor's Personnel and the local community, to promote early diagnosis and to assist affected individuals.

6.8 Contractor's Superintendence

6.8.1 Throughout the execution of the Works, and as long thereafter as is necessary to fulfil the Contractor's obligations, the Contractor shall provide all necessary superintendence to plan, arrange, direct, manage, inspect and test the work.

6.8.2 Superintendence shall be given by a sufficient number of persons having adequate knowledge of the language for communications (defined in Sub-Clause 1.4 [Law and Language]) and of the operations to be carried out (including the methods and techniques required, the hazards likely to be encountered and methods of preventing accidents), for the satisfactory and safe execution of the Works.

6.9 Contractor's Personnel

6.9.1 The Contractor's Personnel specified in the **SCC** shall be appropriately qualified, skilled and experienced in their respective trades or occupations. The Engineer may require the Contractor to remove (or cause to be removed) any person employed on the Site or Works, including the Contractor's Representative if applicable, who:

a) Persists in any misconduct or lack of care,
b) Carries out duties incompetently or negligently,
c) Fails to conform with any provisions of the Contract,
d) Persists in any conduct which is prejudicial to safety, health, or the protection of the environment, or
e) Based on reasonable evidence, is determined to have engaged in Fraud and Corruption during the execution of the Works.

6.9.2 If appropriate, the Contractor shall then appoint (or cause to be appointed) a suitable replacement person.

6.10 Records of Contractor's Personnel and Equipment

The Contractor shall submit, to the Engineer, details showing the number of each class of Contractor's Personnel and of each type of Contractor's Equipment on the Site. Details shall be submitted each calendar month, in a form approved by the Engineer, until the Contractor has completed all work which is known to be outstanding at the completion date stated in the Taking-Over Certificate for the Works.

6.11 Disorderly Conduct

The Contractor shall at all times take all reasonable precautions to prevent any unlawful, riotous or disorderly conduct by or amongst the Contractor's Personnel, and to preserve peace and protection of persons and property on and near the Site.

6.12 Foreign Personnel

6.12.1 The Contractor may bring in to the Country any foreign personnel who are necessary for the execution of the Works to the extent allowed by the applicable Laws. The Contractor shall ensure that these personnel are provided with the required residence visas and work permits. The Procuring Entity will, if requested by the Contractor, use his Lowest endeavors in a timely and expeditious manner to assist the Contract or in obtaining any local, state, national or government permission required for bringing in the Contractor's personnel.

6.12.2 The Contractor shall be responsible for the return of these personnel to the place where they were recruited or to their domicile. In the event of the death in the Country of any of these personnel or members of their families, the Contractor shall similarly be responsible for making the appropriate arrangements for their return or burial.

6.13 Supply of Foodstuffs

The Contractor shall arrange for the provision of a sufficient supply of suitable food as may be stated in the Specification at reasonable prices for the Contractor's Personnel for the purposes of or in connection with the Contract.

6.14 Supply of Water

The Contractor shall, having regard to local conditions, provide on the Site an adequate supply of drinking and other water for the use of the Contractor's Personnel.

6.15 Measures against Insect and Pest Nuisance

The Contractor shall at all times take the necessary precautions to protect the Contractor's Personnel employed on the Site from insect and pest nuisance, and to reduce the danger to their health. The Contractor shall comply with all the regulations of the local health authorities, including use of appropriate insecticide.

6.16 Alcoholic Liquor or Drugs

The Contractor shall not, otherwise than in accordance with the Laws of the Country, import, sell, give, barter or otherwise dispose of any alcoholic liquor or drugs, or permit or allow importation, sale, gift, barter or disposal thereof by Contractor's Personnel.

6.17 Arms and Ammunition

The Contractor shall not give, barter, or otherwise dispose of, to any person, any arms or ammunition of any kind, or allow Contractor's Personnel to do so.

6.18 Festivals and Religious Customs

The Contractor shall respect the Country's recognized festivals, days of rest and religious or other customs.

6.19 Funeral Arrangements

The Contractor shall be responsible, to the extent required by local regulations, for making any funeral arrangements for any of his local employees who may die while engaged upon the Works.

6.20 Prohibition of Forced or Compulsory Labor

The Contractor shall not employ forced labor, which consists of any work or service, not voluntarily performed, that is exacted from an individual under threat of force or penalty, and includes any kind of involuntary or compulsory labor, such as indentured labor, bonded labor or similar labor-contracting arrangements.

6.21 Prohibition of Harmful Child Labor

The Contractor shall not employ children in a manner that is economically exploitative, or is likely to be hazardous, or to interfere with, the child's education, or to be harmful to the child's health or physical, mental, spiritual, moral, or social development. Where the relevant labor laws of the Country have provisions for employment of minors, the Contract or shall follow those laws applicable to the Contractor. Children below the age of 18 years shall not be employed in dangerous work.

6.22 Employment Records of Workers

The Contractor shall keep complete and accurate records of the employment of labor at the Site. The records shall include the names, ages, genders, hours worked and wages paid to all workers. These records shall be summarized on a monthly basis and submitted to the Engineer. These records shall be included in the details to be submitted by the Contractor under Sub-Clause 6.10 [Records of Contractor's Personnel and Equipment].

6.23 Workers' Organizations

The Contractor shall comply with laws on workers' rights to form and to join workers' organizations without interference and to bargain collectively.

6.24 Non-Discrimination and Equal Opportunity

The Contractor shall not make employment decisions on the basis of personal characteristics unrelated to inherent job requirements. The Contractor shall base the employment relationship on the principle of equal opportunity and fair treatment and shall not discriminate with respect to aspects of the employment relationship, including recruitment and hiring, compensation (including wages and benefits), working conditions and terms of employment, access to training, promotion, termination of employment or retirement, and discipline.

7. Plant, Materials and Workmanship

7.1 Manner of Execution

The Contractor shall carry out the manufacture of Plant, the production and manufacture of Materials, and all other execution of the Works:

a) In the manner (if any) specified in the Contract,
b) In a proper workman like and careful manner, in accordance with recognized good practice, and
c) with properly equipped facilities and non-hazardous Materials, except as otherwise specified in the Contract.

7.2 Samples

The Contractor shall submit the following samples of Materials, and relevant information, to the Engineer for consent prior to using the Materials in or for the Works:

a) manufacturer's standard samples of Materials and samples specified in the Contract, all at the Contractor's cost, and
b) additional samples instructed by the Engineer as a Variation.

Each sample shall be labeled as to origin and intended use in the Works.

7.3 Inspection

7.3.1 The Procuring Entity's Personnel shall at all reasonable times:

a) Have full access to all parts of the Site and to all places from which natural Materials are being obtained, and
b) during production, manufacture and construction (at the Site and elsewhere), be entitled to examine, inspect, measure and test the materials and workmanship, and to check the progress of manufacture of Plant and production and manufacture of Materials.

7.3.2 The Contractor shall give the Procuring Entity's Personnel full opportunity to carry out these activities, including providing access, facilities, permissions and safety equipment. No such activity shall relieve the Contractor from any obligation or responsibility.

The Contractor shall give notice to the Engineer whenever any work is ready and before it is covered up, put out of sight, or packaged for storage or transport. The Engineer shall then either carry out the examination, inspection, measurement or testing without unreasonable delay, or promptly give notice to the Contractor that the Engineer does not require to do so. If the Contractor fails to give the notice, he shall, if and when required by the Engineer, uncover the work and thereafter reinstate and make good, all at the Contractor's cost.

7.4 Testing

7.4.1 This Sub-Clause shall apply to all tests specified in the Contract, other than the Tests after Completion (if any).

7.4.2 Except as otherwise specified in the Contract, the Contractor shall provide all apparatus, assistance, documents and other information, electricity, equipment, fuel, consumables, instruments, labor, materials, and suitably qualified and experienced staff, as are necessary to carry out the specified tests efficiently. The Contractor shall agree, with the Engineer, the time and place for the specified testing of any Plant, Materials and other parts of the Works.

The Engineer may, under Clause 13 [Variations and Adjustments], vary the location or details of specified tests, or instruct the Contractor to carry out additional tests. If these varied or additional tests show that the tested Plant, Materials or workmanship is not in accordance with the Contract, the cost of carrying out this Variation shall be borne by the Contractor, notwithstanding other provisions of the Contract.

7.4.3 The Engineer shall give the Contractor not less than 24 hours' notice of the Engineer's intention to attend the tests. If the Engineer does not attend at the time and place agreed, the Contractor may proceed with the tests, unless otherwise instructed by the Engineer, and the tests shall then be deemed to have been made in the Engineer'spresence.

If the Contractor suffers delay and/or incurs Cost from complying with these instructions or as a result of a delay for which the Procuring Entity is responsible, the Contractor shall give notice to the Engineer and shall be entitled subject to Sub-Clause 20.1 [Contractor's Claims] to:

a) An extension of time for any such delay, if completion is or will be delayed, under Sub-Clause 8.4 [Extension ofTime for Completion], and

b) Payment of any such Cost-plus profit, which shall be included in the Contract Price.

7.4.4 After receiving this notice, the Engineer shall proceed in accordance with Sub-Clause 3.5 [Determinations] to agree or determine these matters.

The Contractor shall promptly forward to the Engineer duly certified reports of the tests. When the specified tests have been passed, the Engineer shall endorse the Contractor's test certificate, or issue a certificate to him, to that effect. If the Engineer has not attended the tests, he shall be deemed to have accepted the readings as accurate.

7.5 Rejection

7.5.1 If, as a result of an examination, inspection, measurement or testing, any Plant, Materials or workmanship is found to be defective or otherwise not in accordance with the Contract, the Engineer may reject the Plant, Materials or workmanship by giving notice to the Contractor, with reasons. The Contractor shall then promptly make good the defect and ensure that the rejected item complies with the Contract.

7.5.2 If the Engineer requires this Plant, Materials or workmanship to be retested, the tests shall be repeated unde rthe same terms and conditions. If the rejection and retesting cause the Procuring Entity to incur additional costs, the Contractor shall subject to Sub-Clause 2.5 [Procuring Entity's Claims] pay these costs to the Procuring Entity.

7.6 Remedial Work

7.6.1 Notwithstanding any previous test or certification, the Engineer may instruct the Contractor to:

a) remove from the Site and replace any Plant or Materials which is not in accordance with the Contract,

b) remove and re-execute any other work which is not in accordance with the Contract, and

c) execute any work which is urgently required for the safety of the Works, whether because of an accident, unforeseeable event or otherwise.

7.6.2 The Contractor shall comply with the instruction within a reasonable time, which shall be the time (if any) specified in the instruction, or immediately if urgency is specified under sub-paragraph (c).

7.6.3 If the Contractor fails to comply with the instruction, the Procuring Entity shall be entitled to employ and pay other persons to carry out the work. Except to the extent that the Contractor would have been entitled to payment for the work, the Contractor shall subject to Sub-Clause 2.5 [Procuring Entity's Claims] pay to the Procuring Entity all costs arising from this failure.

7.7 Ownership of Plant and Materials

Except as otherwise provided in the Contract, each item of Plant and Materials shall, to the extent consistent with the Laws of the Country, become the property of the Procuring Entity at whichever is the earlier of the following times, free from liens and other encumbrances:

a) When it is incorporated in the Works;
b) when the Contractor is paid the corresponding value of the Plant and Materials under Sub-Clause 8.10 [Payment for Plant and Materials in Event of Suspension].

7.8 Royalties

Unless otherwise stated in the Specification, the Contractor shall pay all royalties, rents and other payments for:

a) Natural Materials obtained from outside the Site, and
b) The disposal of material from demolitions and excavations and of other surplus material (whether natural or man-made), except to the extent that disposal areas within the Site are specified in the Contract.

8. COMMENCEMENT, DELAYS AND SUSPENSION

8.1 Commencement of Works

8.1.1 Except as otherwise specified in the Special Conditions of Contract, the Commencement Date shall be the date at which the following precedent conditions have all been fulfilled and the Engineer's notification recording the agreement of both Parties on such fulfilment and instructing to commence the Work is received by the Contractor:

a) Contract by relevant authorities of the Country;
b) delivery to the Contractor of reasonable evidence of the Procuring Entity's financial arrangements (under Sub-Clause 2.4 [Procuring Entity's Financial Arrangements]);
c) signature of the Contract Agreement by both Parties, and if required, approval of the except if otherwise specified in the **SCC**, effective access to and possession of the Site given to the Contractor together with such permission(s) under (a) of Sub-Clause 1.13 [Compliance with Laws] as required for the commencement of the Works
d) receipt by the Contract or of the Advance Payment under Sub-Clause14.2 [Advance Payment] provided that the corresponding Procuring Entity guarantee has been delivered by the Contractor.

8.1.2 If the said Engineer's instruction is not received by the Contractor within 180 days from his receipt of the Letter of Acceptance, the Contractor shall be entitled to terminate the Contract under Sub-Clause 16.2 [Termination by Contractor].

8.1.3 The Contractor shall commence the execution of the Works as soon as is reasonably practicable after the Commencement Date and shall then proceed with the Works with due expedition and without delay.

8.2 Time for Completion

The Contractor shall complete the whole of the Works, and each Section (if any), within the Time for Completion for the Works or Section (as the case may be), including:

a) achieving the passing of the Tests on Completion, and
b) completing all work which is stated in the Contract as being required for the Works or Section to be considered to be completed for the purposes of taking-over under Sub-Clause 10.1 [Taking Over of the Works and Sections].

8.3 Programme

8.3.1 The Contractor shall submit a detailed time programme to the Engineer within 14 days after receiving the notice under Sub-Clause 8.1 [Commencement of Works]. The Contractor shall also submit a revised programme whenever the previous programme is inconsistent with actual progress or with the Contractor's obligations. Each programme shall include:

a) the order in which the Contractor intends to carry out the Works, including the anticipated timing ofeach stage of design (if any), Contractor's Documents, procurement, manufacture of Plant, delivery to Site, construction, erection and testing,

b) each of these stages for work by each nominated Subcontractor (as defined in Clause 5 [Nominated Subcontractors]),

c) the sequence and timing of inspections and tests specified in the Contract, and

d) a supporting report which includes:

i) a general description of the methods which the Contract or intends to adopt, and of the major stages, in the execution of the Works, and

ii) details showing the Contractor's reasonable estimate of the number of each class of Contractor's Personnel and of each type of Contractor's Equipment, required on the Site for each major stage.

8.3.2 Unless the Engineer, within 14 days after receiving a programme, gives notice to the Contractor stating the extent to which it does not comply with the Contract, the Contractor shall proceed in accordance with the programme, subject to his other obligations under the Contract. The Procuring Entity's Personnel shall be entitled to rely upon the programme when planning their activities.

8.3.3 The Contractor shall promptly give notice to the Engineer of specific probable future events or circumstances which may adversely affect the work, increase the Contract Price or delay the execution of the Works. The Engineer may require the Contractor to submit an estimate of the anticipated effect of the future event or circumstances, and/or a proposal under Sub-Clause 13.3 [Variation Procedure].

8.3.4 If, at anytime, the Engineer gives notice to the Contractor that a programme fails (to the extent stated) to comply with the Contract or to be consistent with actual progress and the Contractor's stated intentions, the Contractor shall submit a revised programme to the Engineer in accordance with this Sub-Clause.

8.4 Extension of Time for Completion

8.4.1 The Contractor shall be entitled subject to Sub-Clause 20.1 [Contractor's Claims] to an extension of the Time for Completion if and to the extent that completion for the purposes of Sub-Clause10.1 [Taking Over of the Works and Sections] is or will be delayed by any of the following causes:

a) a Variation (unless an adjustment to the Time for Completion has been agreed under Sub-Clause 13.3 [Variation Procedure]) or other substantial change in the quantity of an item of work included in the Contract,

b) a cause of delay giving an entitlement to extension of time under a Sub-Clause of these Conditions,

c) exceptionally adverse climatic conditions,

d) Unforeseeable shortages in the availability of personnel or Goods caused by epidemic or governmental actions, or

e) Any delay, impediment or prevention caused by or attributable to the Procuring Entity, the Procuring Entity's Personnel, or the Procuring Entity's other contractors.

8.4.2 If the Contractor considers itself to be entitled to an extension of the Time for Completion, the Contractor shall give notice to the Engineer in accordance with Sub-Clause 20.1 [Contractor's Claims]. When determining each extension of time under Sub-Clause 20.1, the Engineer shall review previous determinations and may increase, but shall not decrease, the total extension of time.

8.5 Delays Caused by Authorities

If the following conditions apply, namely:

a) The Contractor has diligently followed the procedures laid down by the relevant legally constituted public authorities in the Country,

b) These authorities delay or disrupt the Contractor's work, and

c) the delay or disruption was Unforeseeable, then this delay or disruption will be considered as a cause of delay under sub-paragraph (b) of Sub-Clause 8.4 [Extension of Time for Completion].

8.6 Rate of Progress

8.6.1 If, at any time:

a) Actual progress is too slow to complete within the Time for Completion, and/or

b) Progress has fallen (or will fall) behind the current programme under Sub-Clause 8.3 [Programme], other than as a result of a cause listed in Sub-Clause 8.4 [Extension of Time for Completion], then the Engineer may instruct the Contractor to submit, under Sub-Clause 8.3 [Programme], a revised programme and supporting report describing the revised methods which the Contractor proposes to adopt in order to expedite progress and complete within the Time for Completion.

Unless the Engineer notifies otherwise, the Contractor shall adopt these revised methods, which may require increases in the working hours and/or in the numbers of Contractor's Personnel and/or Goods, at the risk and cost of the Contractor. If these revised methods cause the Procuring Entity to incur additional costs, the Contractor shall subject to notice under Sub-Clause 2.5 [Procuring Entity's Claims] pay these costs to the Procuring Entity, in addition to delay damages (if any) under Sub-Clause 8.7 below.

8.6.2 Additional costs of revised methods including acceleration measures, instructed by the Engineer to reduce delays resulting from causes listed under Sub-Clause 8.4 [Extension of Time for Completion] shall be paid by the Procuring Entity, without generating, however, any other additional payment benefit to the Contractor.

8.7 Delay Damages

8.7.1 If the Contractor fails to comply with Sub-Clause 8.2 [Time for Completion], the Contractor shall subject to notice under Sub-Clause 2.5 [Procuring Entity's Claims] pay delay damages to the Procuring Entity for this default. These delay damages shall be the sum stated in the **SCC**, which shall be paid for everyday which shall elapse between the relevant Time for Completion and the datestatedintheTaking-OverCertificate.However, the total amount due under this Sub-Clause shall not exceed the maximum amount of delay damages (if any) stated in the **SCC**.

8.7.2 These delay damages shall be the only damages due from the Contractor for such default, other than in the event of termination under Sub-Clause 15.2 [Termination by Procuring Entity] prior to completion of the Works. These damages shall not relieve the Contractor from his obligation to complete the Works, or from any other duties, obligations or responsibilities which he may have under the Contract.

8.8 Suspension of Work

The Engineer may at any time instruct the Contractor to suspend progress of part or all of the Works. During such suspension, the Contractor shall protect, store and secure such part or the Works against any deterioration, loss or damage.

The Engineer may also notify the cause for the suspension. If and to the extent that the cause is notified and is the responsibility of the Contractor, the following Sub-Clauses 8.9, 8.10 and 8.11 shall not apply.

8.9 Consequences of Suspension

8.9.1 If the Contractor suffers delay and/or incurs Cost from complying with the Engineer's instructions under Sub-Clause 8.8 [Suspension of Work] and/or from resuming the work, the Contractor shall give notice to the Engineer and shall been titled subject to Sub-Clause 20.1 [Contractor's Claims] to:

a) An extension of time for any such delay, if completion is or will be delayed, under Sub-Clause 8.4 [Extension of Time for Completion], and

b) Payment of any such Cost, which shall be included in the Contract Price.

After receiving this notice, the Engineer shall proceed in accordance with Sub-Clause 3.5 [Determinations] to agree or determine these matters.

8.9.2 The Contractor shall not be entitled to an extension of time for, or to payment of the Cost incurred in, making good the consequences of the Contractor's faulty design, workmanship or materials, or of the Contractor's failure to protect, store or secure in accordance with Sub-Clause 8.8 [Suspension of Work].

8.10 Payment for Plant and Materials in Event of Suspension

The Contractor shall be entitled to payment of the value (as at the date of suspension) of Plant and/or Materials which have not been delivered to Site, if:

a) the work on Plant or delivery of Plant and/or Materials has been suspended for more than 30 days, and
b) the Contractor has marked the Plant and/or Materials as the Procuring Entity's property in accordance with the Engineer's instructions.

8.11 Prolonged Suspension

If the suspension under Sub-Clause 8.8 [Suspension of Work] has continued for more than 84 days, the Contractor may request the Engineer's permission to proceed. If the Engineer does not give permission within 30 days after being requested to do so, the Contractor may, by giving notice to the Engineer, treat the suspension as an omission under Clause 13 [Variations and Adjustments] of the affected part of the Works. If the suspension affects the whole of the Works, the Contractor may give notice of termination under Sub-Clause 16.2 [Termination by Contractor].

8.12 Resumption of Work

After the permission or instruction to proceed is given, the Contractor and the Engineer shall jointly examine the Works and the Plant and Materials affected by the suspension. The Contractor shall make good any deterioration or defect in or loss of the Works or Plant or Materials, which has occurred during the suspension after receiving from the Engineer an instruction to this effect under Clause13 [Variations and Adjustments].

9. TESTS ON COMPLETION

9.1 Contractor's Obligations

9.1.1 The Contractor shall carry out the Tests on Completion in accordance with this Clause and Sub-Clause 7.4 [Testing], after providing the documents in accordance with sub-paragraph (d) of Sub-Clause 4.1 [Contractor's General Obligations].

9.1.2 The Contractor shall give to the Engineer not less than 21 days' notice of the date after which the Contract or will be ready to carry out each of the Tests on Completion. Unless otherwise agreed, Tests on Completion shall be carried out within 14 days after this date, on such day or days as the Engineer shall instruct.

9.1.3 In considering the results of the Tests on Completion, the Engineer shall make allowances for the effect of any use of the Works by the Procuring Entity on the performance or other characteristics of the Works. As soon as the Works, or a Section, have passed any Tests on Completion, the Contractor shall submit a certified report of the results of these Tests to the Engineer.

9.2 Delayed Tests

9.2.1 If the Tests on Completion are being unduly delayed by the Procuring Entity, Sub-Clause 7.4 [Testing] (fifth paragraph) and/or Sub-Clause 10.3 [Interference with Tests on Completion] shall be applicable.

If the Tests on Completion are being unduly delayed by the Contractor, the Engineer may by notice require the Contractor to carry out the Tests within 21 days after receiving the notice. The Contractor shall carry out the Tests on such day or days within that period as the Contract or may fix and of which he shall give notice to the Engineer.

If the Contractor fails to carry out the Tests on Completion within the period of 21 days, the Procuring Entity's Personnel may proceed with the Tests at the risk and cost of the Contractor. The Tests on Completion shall then be deemed to have been carried out in the presence of the Contract or and the results of the Tests shall be accepted as accurate.

9.3 Retesting

If the Works, or a Section, fail to pass the Tests on Completion, Sub-Clause 7.5 [Rejection] shall apply, and the Engineer or the Contractor may require the failed Tests, and Tests on Completion on any related work, to be repeated under the same terms and conditions.

9.4 Failure to Pass Tests on Completion

9.4.1 If the Works, or a Section, fail to pass the Tests on Completion repeated under Sub-Clause 9.3 [Retesting], the Engineer shall be entitled to:

a) Order further repetition of Tests on Completion under Sub-Clause 9.3;

b) If the failure deprives the Procuring Entity of substantially the whole benefit of the Works or Section, reject the Works or Section (as the case may be), in which event the Procuring Entity shall have the same remedies as are provided in sub-paragraph (c) of Sub-Clause 11.4 [Failure to Remedy Defects]; or

c) Issue a Taking-Over Certificate, if the Procuring Entity so requests.

9.4.2 In the event of sub-paragraph (c), the Contractor shall proceed in accordance with all other obligations under the Contract, and the Contract Price shall be reduced by such amount as shall be appropriate to cover the reduced value to the Procuring Entity as a result of this failure. Unless the relevant reduction for this failure is stated (or its method of calculation is defined) in the Contract, the Procuring Entity may require the reduction to be (i) agreed by both Parties (in full satisfaction of this failure only) and paid before this Taking-Over Certificate is issued, or
(ii) determined and paid under Sub-Clause 2.5 [Procuring Entity's Claims] and Sub-Clause 3.5 [Determinations].

10. PROCURING ENTITY'S TAKING OVER

10.1 Taking Over of the Works and Sections

10.1.1 Except as stated in Sub-Clause 9.4 [Failure to Pass Tests on Completion], the Works shall be taken over by the Procuring Entity when (i) the Works have been completed in accordance with the Contract, including the matters described in Sub-Clause 8.2 [Time for Completion] and except as allowed in sub-paragraph (a) below, and (ii) a Taking-Over Certificate for the Works has been issued, or is deemed to have been issued in accordance with this Sub-Clause.

10.1.2 The Contractor may apply by notice to the Engineer for a Taking-Over Certificate not earlier than 14 days before the Works will, in the Contractor's opinion, be complete and ready for taking over. If the Works are divided into Sections, the Contract or may similarly apply for a Taking-Over Certificate for each Section.

The Engineer shall, within 30 days after receiving the Contractor's application:

a) issue the Taking-Over Certificate to the Contractor, stating the date on which the Works or Section were completed in accordance with the Contract, except for any minor outstanding work and defects which will not substantially affect the use of the Works or Section for their intended purpose (either until or whilst this work is completed and these defects are remedied); or

b) reject the application, giving reasons and specifying the work required to be done by the Contractor to enable the Taking-Over Certificate to be issued. The Contractor shall then complete this work before issuing a further notice under this Sub-Clause.

10.1.3 If the Engineer fails either to issue the Taking-Over Certificate or to reject the Contractor's application within the period of 30 days, and if the Works or Section (as the case may be) are substantially in accordance with the Contract, the Taking-Over Certificate shall be deemed to have been issued on the last day of that period.

10.2 Taking Over of Parts of the Works

10.2.1 The Engineer may, at the sole discretion of the Procuring Entity, issue a Taking-Over Certificate for any part of the Permanent Works.

The Procuring Entity shall not use any part of the Works (other than as a temporary measure which is either specified in the Contract or agreed by both Parties) unless and until the Engineer has issued a Taking-Over Certificate for this part. However, if the Procuring Entity does use any part of the Works before the Taking-Over Certificate isissued:

a) The part which is used shall be deemed to have been taken over as from the date on which it is used,

b) The Contractor shall cease to be liable for the care of such part as from this date, when responsibility shall pass to the Procuring Entity, and

c) If requested by the Contractor, the Engineer shall issue a Taking-Over Certificate for this part.

10.2.2 After the Engineer has issued a Taking-Over Certificate for a part of the Works, the Contractor shall be given the earliest opportunity to take such steps as may be necessary to carry out any outstanding Tests onCompletion. The Contractor shall carry out these Tests on Completion as soon as practicable before the expiry date of the relevant Defects Notification Period.

10.2.3 If the Contractor incurs Cost as a result of the Procuring Entity taking over and/or using a part of the Works, other than such use as is specified in the Contractor agreed by the Contractor, the Contractor shall (i) give notice to the Engineer and (ii) be entitled subject to Sub-Clause 20.1 [Contractor's Claims] to payment of any such Cost-plus profit, which shall be included in the Contract Price. After receiving this notice, the Engineer shall proceed in accordance with Sub-Clause 3.5 [Determinations] to agree or determine this Cost and profit.

10.2.4 If a Taking-Over Certificate has been issued for a part of the Works (other than a Section), the delay damages there after for completion of the remainder of the Works shall be reduced. Similarly, the delay damages for the remainder of the Section (if any) in which this part is included shall also be reduced. For any period of delay after the date stated in this Taking-Over Certificate, the proportional reduction in these delay damages shall be calculated as the proportion which the value of the part so certified bears to the value of the Works or Section (as the case may be) as a whole. The Engineer shall proceed in accordance with Sub-Clause 3.5 [Determinations] to agree or determine these proportions. The provisions of this paragraph shall only apply to the daily rate of delay damages under Sub-Clause 8.7 [Delay Damages] and shall not affect the maximum amount of these damages.

10.3 Interference with Tests on Completion

10.3.1 If the Contractor is prevented, for more than 14 days, from carrying out the Tests on Completion by a cause for which the Procuring Entity is responsible, the Procuring Entity shall be deemed to have taken over the Works or Section (as the case may be) on the date when the Tests on Completion would otherwise have been completed.

The Engineer shall then issue a Taking-Over Certificate accordingly, and the Contractor shall carry out the Tests on Completion as soon as practicable, before the expiry date of the Defects Notification Period. The Engineer shall require the Tests on Completion to be carried out by giving 14 days' notice and in accordance with the relevant provisions of the Contract.

10.3.2 If the Contractor suffers delay and/or incurs Cost as a result of this delay in carrying out the Tests on Completion, the Contractor shall give notice to the Engineer and shall be entitled subject to Sub-Clause 20.1 [Contractor's Claims] to:

a) An extension of time for any such delay, if completion is or will be delayed, under Sub-Clause 8.4 [Extension of Time for Completion], and
b) Payment of any such Cost-plus profit, which shall be included in the Contract Price.

10.3.3 After receiving this notice, the Engineer shall proceed in accordance with Sub-Clause 3.5 [Determinations] to agree or determine these matters.

10.4 Surfaces Requiring Reinstatement

Except as otherwise stated in a Taking-Over Certificate, a certificate for a Section or part of the Works shall not be deemed to certify completion of any ground or other surfaces requiring reinstatement.

11. Defects Liability

11.1 Completion of Outstanding Work and Remedying Defects

In order that the Works and Contractor's Documents, and each Section, shall be in the condition required by the Contract (fair wear and tear excepted) by the expiry date of the relevant Defects Notification Period or as soon as practicable there after, the Contractor shall:

a) complete any work which is outstanding on the date stated in a Taking-Over Certificate, within such reasonable time as is instructed by the Engineer, and

b) execute all work required to remedy defects or damage, as may be notified by (or on behalf of) the Procuring Entity on or before the expiry date of the Defects Notification Period for the Works or Section (as the case may be).

If a defect appears or damage occurs, the Contractor shall be notified accordingly, by (or on behalf of) the Procuring Entity.

11.2 Cost of Remedying Defects

11.2.1 All work referred to in sub-paragraph (b) of Sub-Clause 11.1 [Completion of Outstanding Work and Remedying Defects] shall be executed at the risk and cost of the Contractor, if and to the extent that the work is attributable to:

a) Any design for which the Contractor is responsible,
b) Plant, Materials or workmanship not being in accordance with the Contract, or
c) Failure by the Contractor to comply with any other obligation.

11.2.2 If and to the extent that such work is attributable to any other cause, the Contractor shall be notified promptly by (or on behalf of) the Procuring Entity, and Sub-Clause 13.3 [Variation Procedure] shall apply.

11.3 Extension of Defects Notification Period

11.3.1 The Procuring Entity shall be entitled subject to Sub-Clause 2.5 [Procuring Entity's Claims] to an extension of the Defects Notification Period for the Works or a Section if and to the extent that the Works, Section or a major item of Plant (as the case may be, and after taking over) cannot be used for the purposes for which they are intended by reason of a defect or by reason of damage attributable to the Contractor. However, a Defects Notification Period shall not be extended by more than two years.

11.3.2 If delivery and/or erection of Plant and/or Materials was suspended under Sub-Clause 8.8 [Suspension of Work] orSub-Clause 16.1 [Contractor's Entitlement to Suspend Work], the Contractor's obligations under this Clause shall not apply to any defects or damage occurring more than two years after the Defects Notification Period for the Plant and/or Materials would otherwise have expired.

11.4 Failure to Remedy Defects

11.4.1 If the Contractor fails to remedy any defector damage within a reasonable time, a date may be fixed by (or on behalf of) the Procuring Entity, on or by which the defect or damage is to be remedied. The Contractor shall be given reasonable notice of this date.

11.4.2 If the Contractor fails to remedy the defect or damage by this notified date and this remedial work was to be executed at the cost of the Contractor under Sub-Clause 11.2 [Cost of Remedying Defects], the Procuring Entity may (at his option):

a) Carry out the work itself or by others, in a reasonable manner and at the Contractor's cost, but the Contractor shall have no responsibility for this work; and the Contractor shall subject to Sub-Clause 2.5 [Procuring Entity's Claims] pay to the Procuring Entity the costs reasonably incurred by the Procuring Entity in remedying the defect or damage;
b) Require the Engineer to agree or determine a reasonable reduction in the Contract Price in accordance with Sub-Clause3.5 [Determinations]; or
c) If the defect or damage deprives the Procuring Entity of substantially the whole benefit of the Works or any major part of the Works, terminate the Contract as a whole, or in respect of such major part which cannot be put to the intended use.

11.4.3 Without prejudice to any other rights, under the Contractor otherwise, the Procuring Entity shall then be entitled to recover all sums paid for the Works or for such part (as the case may be), plus financing costs and the cost of dismantling the same, clearing the Site and returning Plant and Materials to the Contractor.

11.5 Removal of Defective Work

If the defect or damage cannot be remedied expeditiously on the Site and the Procuring Entity gives consent, the Contractor may remove from the Site for the purposes of repair such items of Plant as are defective or damaged. This consent may require the Contractor to increase the amount of the Performance Security by the full replacement cost of these items, or to provide other appropriate security.

11.6 Further Tests

If the work of remedying of any defect or damage may affect the performance of the Works, the Engineer may require the repetition of any of the tests described in the Contract. The requirement shall be made by notice within 30 days after the defect or damage is remedied.

These tests shall be carried out in accordance with the terms applicable to the previous tests, except that hey shall be carried out at the risk and cost of the Party liable, under Sub-Clause 11.2 [Cost of Remedying Defects], for the cost of the remedial work.

11.7 Right of Access

Until the Performance Certificate has been issued, the Contractor shall have such right of access to the Works as is reasonably required in order to comply with this Clause, except as may be inconsistent with the Procuring Entity's reasonable security restrictions.

11.8 Contractor to Search

The Contractor shall, if required by the Engineer, search for the cause of any defect, under the direction of the Engineer. Unless the defect is to be remedied at the cost of the Contractor under Sub-Clause 11.2 [Cost of Remedying Defects], the Cost of the search plus profit shall be agreed or determined by the Engineer in accordance with Sub-Clause 3.5 [Determinations] and shall be included in the Contract Price.

11.9 Completion Certificate

11.9.1 Performance of the Contractor's obligations shall not be considered to have been completed until the Engineer has issued the Performance Certificate to the Contractor, stating the date on which the Contractor completed his obligations under the Contract.

11.9.2 The Engineer shall issue the Performance Certificate within 30 days after the latest of the expiry dates of the Defects Notification Periods, or as soon thereafter as the Contractor has supplied all the Contractor's Documents and completed and tested all the Works, including remedying any defects. A copy of the Performance Certificate shall be issued to the Procuring Entity.

11.9.3 Only the Performance Certificate shall be deemed to constitute acceptance of the Works.

11.10 Unfulfilled Obligations

After the Performance Certificate has been issued, each Party shall remain liable for the fulfilment of any obligation which remains unperformed at that time. For the purposes of determining the nature and extentof unperformed obligations, the Contract shall be deemed to remain in force.

11.11 Clearance of Site

11.11.1 Upon receiving the Performance Certificate, the Contractor shall remove any remaining Contractor's Equipment, surplus material, wreckage, rubbish and Temporary Works from the Site.

11.11.2 If all these items have not been removed within 30 days after receipt by the Contractor of the Performance Certificate, the Procuring Entity may sell or otherwise dispose of any remaining items. The Procuring Entity shall be entitled to be paid the costs incurred in connection with, or attributable to, such sale or disposal and restoring the Site.

Any balance of the moneys from the sale shall be paid to the Contractor. If these moneys are less than the Procuring Entity's costs, the Contractor shall pay the outstanding balance to the Procuring Entity.

12. MEASUREMENT AND EVALUATION

12.1 Works to be Measured

12.1.1 The Works shall be measured, and valued for payment, in accordance with this Clause. The Contractor shall show in each application under Sub-Clauses 14.3 [Application for Interim Payment Certificates], 14.10 [Statement on Completion] and 14.11 [Application for Final Payment Certificate] the quantities and other particulars detailing the amounts which he considers to be entitled under the Contract.

12.1.2 Whenever the Engineer requires any part of the Works to be measured, reasonable notice shall be given to the Contractor's Representative, who shall:

a) promptly either attend or send another qualified representative to assist the Engineer in making the measurement, and

(b) supply any particulars requested by the Engineer.

If the Contractor fails to attend or send a representative, the measurement made by (or on behalf of) the Engineer shall be accepted as accurate.

12.1.3 Except as otherwise stated in the Contract, wherever any Permanent Works are to be measured from records, these shall be prepared by the Engineer. The Contractor shall, as and when requested, attend to examine and agree the records with the Engineer, and shall sign the same when agreed. If the Contractor does not attend, the records shall be accepted as accurate.

12.1.4 If the Contractor examines and disagrees the records, and/or does not sign them as agreed, then the Contractor shall give notice to the Engineer of the respects in which the records are asserted to be inaccurate. After receiving this notice, the Engineer shall review the records and either confirm or vary them and certify the payment of the undisputed part. If the Contractor does not so give notice to the Engineer within 14 days after being requested to examine the records, they shall be accepted as accurate.

12.2 Method of Measurement

Except as otherwise stated in the Contract and notwithstanding local practice:

a) Measurement shall be made of the net actual quantity of each item of the Permanent Works, and
b) The method of measurement shall be in accordance with the Bills of Quantities or other applicable Schedules.

12.3 Evaluation

12.3.1 Except as otherwise stated in theContract, the Engineer shallproceed in accordance with Sub-Clause 3.5 [Determinations] to agree or determine the Contract Price by evaluating each item of work, applying the measurement agreed or determined in accordance with the above Sub-Clauses 12.1 and 12.2 and the appropriate rate or price for the item.

For each item of work, the appropriate rate or price for the item shall be the rate or price specified for such item in the Contractor, if there is no such item, specified for similar work.

12.3.2 Any item of work included in the Bills of Quantities for which no rate or price was specified shall be considered as included in other rates and prices in the Bills of Quantities and will not be paid for separately.

However, a new rate or price shall be appropriate for an item of work if:

a) I) the measured quantity of the item is changed by more than 25% from the quantity of this item in the Bills of Quantities or another Schedule,
   ii) This change in quantity multiplied by such specified rate fo rthis item exceeds 0.25% of the Accepted Contract Amount,
   iii) This change in quantity directly changes the Cost per unit quantity of this item by more than 1%, and
   iv) This item is not specified in the Contract as a “fixed rate item”;

   or

b) i) the work is instructed under Clause 13 [Variations and Adjustments],
   ii) no rate or price is specified in the Contract for this item, and
   iii) no specified rate or price is appropriate because the item of work is not of similar character, or is not executed under similar conditions, as any item in the Contract.

12.3.3 Each new rate or price shall be derived from any relevant rates or prices in the Contract, with reasonable adjustments to take account of the matters described in sub-paragraph (a) and/or (b), as

applicable. If no rates or prices are relevant for the derivation of a new rate or price, it shall be derived from the reasonable Cost of executing the work, together with profit, taking account of any other relevant matters.

12.3.4 Until such time as an appropriate rate or price is agreed or determined, the Engineer shall determine a provisional rate or price for the purposes of Interim Payment Certificates as soon as the concerned work commences.

12.3.5 Where the contract price is different from the corrected tender price, in order to ensure the contractor is not paid less or more relative to the contract price (*which would be the tender price*), payment valuation certificates and variation orders on omissions and additions valued based on rates in the Bill of Quantities or schedule of rates in the Tender, will be adjusted by a plus or minus percentage. The percentage already worked out during tender evaluation is worked out as follows: *(corrected tender price–tender price)/tender price X 100*.

12.4 Omissions

Whenever the omission of any work forms part (or all) of a Variation, the value of which has not been agreed, if:

a) the Contractor will incur (or has incurred) cost which, if the work had not been omitted, would have been deemed to be covered by a sum forming part of the Accepted Contract Amount;
b) the omission of the work will result (or has resulted) in this sum not forming part of the Contract Price; and
c) this cost is not deemed to be included in the evaluation of any substituted work; then the Contractor shall give notice to the Engineer accordingly, with supporting particulars. Upon receiving this notice, the Engineer shall proceed in accordance with Sub-Clause 3.5 [Determinations] to agree or determine this cost, which shall be included in the Contract Price.

13. VARIATIONS AND ADJUSTMENTS

13.1 Right to Vary

13.1.1 Variations may be initiated by the Engineer at any time prior to issuing the Taking-Over Certificate for the Works, either by an instruction or by a request for the Contractor to submit a proposal.

13.1.2 The Contractor shall execute and be bound by each Variation, unless the Contractor promptly gives notice to the Engineer stating (with supporting particulars) that (i) the Contractor cannot readily obtain the Goods required for the Variation, or (ii) such Variation triggers a substantial change in the sequence or progress of the Works. Upon receiving this notice, the Engineer shall cancel, confirm or vary the instruction.
Each Variation may include:

a) Changes to the quantities of any item of work included in the Contract (however, such changes do not necessarily constitute a Variation),
b) Changes to the quality and other characteristics of any item of work,
c) Changes to the levels, positions and/or dimensions of any part of the Works,
d) Omission of any work unless it is to be carried out by others,
e) any additional work, Plant, Materials or services necessary for the Permanent Works, including any associated Tests on Completion, boreholes and other testing and exploratory work, or
f) changes to the sequence or timing of the execution of the Works.

13.1.3 The Contractor shall not make any alteration and/or modification of the Permanent Works, unless and until the Engineer instructs or approves a Variation.

13.2 Value Engineering

13.2.1 The Contract or may, at any time, submit to the Engineer a written proposal which (in the Contractor's opinion) will, if adopted, (i) accelerate completion, (ii) reduce the cost to the Procuring Entity of executing, maintaining or operating the Works, (iii) improve the efficiency or value to the Procuring Entity of the completed Works, or (iv) otherwise be of benefit to the Procuring Entity.

13.2.2 The proposal shall be prepared at the cost of the Contract or and shall include the items listed in Sub- Clause 13.3 [Variation Procedure].

If a proposal, which is approved by the Engineer, includes a change in the design of part of the Permanent Works, then unless otherwise agreed by both Parties:

a) The Contractor shall design this part,
b) sub-paragraphs (a) to (d) of Sub-Clause 4.1 [Contractor's General Obligations] shall apply, and
c) if this change results in a reduction in the contract value of this part, the Engineer shall proceed in accordance with Sub-Clause 3.5 [Determinations] to agree or determine a fee, which shall be included in the Contract Price. This fee shall be half (50%) of the difference between the following amounts:
    i) such reduction in contract value, resulting from the change, excluding adjustments under Sub-Clause 13.7 [Adjustments for Changes in Legislation] and Sub-Clause 13.8 [Adjustments for Changes in Cost], and
    ii) the reduction (if any) in the value to the Procuring Entity of the varied works, taking account of any reductions in quality, anticipated life or operational efficiencies.

13.2.3 However, if amount (i) is less than amount (ii), there shall not be a fee.

13.3 Variation Procedure

13.3.1 If the Engineer requests a proposal, prior to instructing a Variation, the Contractor shall respond in writing as soon as practicable, either by giving reasons why he cannot comply (if this is the case) or by submitting:

a) A description of the proposed work to be performed and a programme for its execution,
b) the Contractor's proposal for any necessary modifications to the programme according toSub-Clause 8.3 [Programme] and to the Time for Completion, and
c) the Contractor's proposal for evaluation of the Variation.

13.3.2 The Engineer shall, as soon as practicable after receiving such proposal (under Sub-Clause 13.2 [Value Engineering] or otherwise), respond with approval, disapproval or comments. The Contractor shall not delay any work whilst awaiting a response.

13.3.3 Each instruction to execute a Variation, with any requirements for the recording of Costs, shall be issued by the Engineer to the Contractor, who shall acknowledge receipt.

Each Variation shall be evaluated in accordance with Clause 12 [Measurement and Evaluation], unless the Engineer instructs or approves otherwise in accordance with this Clause.

13.4 Payment in Applicable Currencies

If the Contract provides for payment of the Contract Price in more than one currency, then whenever an adjustment is agreed, approved or determined as stated above, the amount payable in each of the applicable currencies shall be specified. For this purpose, reference shall be made to the actual or expected currency proportions of the Cost of the varied work, and to the proportions of various currencies specified for payment of the Contract Price.

13.5 Provisional Sums

13.5.1 Each Provisional Sum shall only be used, in whole or in part, in accordance with the Engineer's instructions, and the Contract Price shall be adjusted accordingly. The total sum paid to the Contractor shall include only such amounts, for the work, supplies or services to which the Provisional Sum relates, as the Engineer shall have instructed. For each Provisional Sum, the Engineer may instruct:

a) Work to be executed (including Plant, Materials or services to be supplied) by the Contractor and valued under Sub-Clause 13.3 [Variation Procedure]; and/or

b) Plant, Materials or services to be purchased by the Contractor, from a nominated Subcontractor (as defined in Clause 5 [Nominated Subcontractors]) or otherwise; and for which there shall be included in the Contract Price:

   i) The actual amounts paid (or due to be paid) by the Contractor, and

   ii) A sum for overhead charges and profit, calculated as a percentage of these actual amounts by applying the relevant percentage rate (if any) stated in the appropriate Schedule.

   iii) If there is no such rate, the percentage rate stated in the **SCC** shall be applied.

13.5.2 The Contractor shall, when required by the Engineer, produce quotations, invoices, vouchers and accounts or receipts in substantiation.

13.6 Daywork

13.6.1 For work of a minor or incidental nature, the Engineer may instruct that a Variation shall be executed on a daywork basis. The work shall then be valued in accordance with the Daywork Schedule included in the Contract, and the following procedure shall apply. If a Daywork Schedule is not included in the Contract, this Sub-Clause shall not apply.

Before ordering Goods for the work, the Contractor shall submit quotations to the Engineer. When applying for payment, the Contractor shall submit invoices, vouchers and accounts or receipts for any Goods.

13.6.2 Except for any items for which the Daywork Schedule specifies that payment is not due, the Contractor shall deliver each day to the Engineer accurate statements in duplicate which shall include the following details of the resources used in executing the previous day's work:

a) The names, occupations and time of Contractor's Personnel,

b) The identification, type and time of Contractor's Equipment and Temporary Works, and

c) The quantities and types of Plant and Materials used.

13.6.3 One copy of each statement will, if correct, or when agreed, be signed by the Engineer and returned to the Contractor. The Contractor shall then submit priced statements of these resources to the Engineer, prior to their inclusion in the next Statement under Sub-Clause 14.3 [Application for Interim Payment Certificates].

13.7 Adjustments for Changes in Legislation

13.7.1 The Contract Price shall be adjusted to take account of any increase or decrease in Costresulting from a change in the Laws of the Country (including the introduction of new Laws and the repeal or modification of existing Laws) or in the judicial or official governmental interpretation of such Laws, made after the Base Date, which affect the Contractor in the performance of obligations under the Contract.

13.7.2 If the Contract or suffers (or will suffer) delay and/or incurs (or will incur) additional Cost as a result of these changes in the Laws or in such interpretations, made after the Base Date, the Contractorshall give notice to the Engineer and shall be entitled subject to Sub-Clause 20.1 [Contractor's Claims] to:

a) An extension of time for any such delay, if completion is or will be delayed, under Sub-Clause 8.4 [Extension of Time for Completion], and

b) Payment of any such Cost, which shall be included in the Contract Price.

After receiving this notice, the Engineer shall proceed in accordance with Sub-Clause 3.5 [Determinations] to agree or determine these matters.

13.7.3 Not withstanding the foregoing, the Contractor shall not be entitled to an extension of time if the relevant delay has already been taken into account in the determination of a previous extension of time and such Cost shall not be separately paid if the same shall already have been taken into account inthe index ing of any inputs to the table of adjustment data in accordance with the provisions of Sub-Clause 13.8 [Adjustments for Changes in Cost].

13.8 Adjustments for Changes in Cost

13.8.1 In this Sub-Clause, "table of adjustment data" means the completed table of adjustment data for local and foreign currencies included in the Schedules. If there is no such table of adjustment data, this Sub- Clause shall not apply.

13.8.2 If this Sub-Clause applies, the amounts payable to the Contractor shall be adjusted for rises or falls in the cost of labor, Goods and other inputs to the Works, by the addition or deduction of the amounts determined by the formulae prescribed in this Sub-Clause. To the extent that full compensation for any rise or fall in Costs is not covered by the provisions of this or other Clauses, the Accepted Contract Amount shall be deemed to have included amounts to cover the contingency of other rises and falls in costs.

13.8.3 The adjustment to be applied to the amount otherwise payable to the Contractor, as valued in accordance with the appropriate Schedule and certified in Payment Certificates, shall be determined from formulae for each of the currencies in which the Contract Price is payable. No adjustment is to be applied to work valued on the basis of Cost or current prices. The formulae shall be of the following general type:

Pn = a + b Ln/ Lo + c En/Eo + d Mn/Mo + ... where:

"Pn"is the adjustment multiplier to be applied to the estimated contract value in the relevant currency of the work carried out in period "n", this period being a month unless otherwise stated in the **SCC**;

"a" is a fixed coefficient, stated in the relevant table of adjustment data, representing the non-adjustable portion in contractual payments;

"b", "c", "d" …are coefficients representing the estimated proportion of each cost element related to the execution of the Works, as stated in the relevant table of adjustment data; such tabulated cost elements may be indicative of resources such as labor, equipment and materials;

"Ln", "En", "Mn", … are the current cost indices or reference prices for period "n", expressed in the relevant currency of payment, each of which is applicable to the relevant tabulated cost element on the date 49 days prior to the last day of the period (to which the particular Payment Certificate relates); and

"Lo", "Eo", "Mo", … are the base cost indices or reference prices, expressed in the relevant currency of payment, each of which is applicable to the relevant tabulated cost element on the Base Date.

13.8.4 The cost indices or reference prices stated in the table of adjustment data shall be used. If their source is in doubt, it shall be determined by the Engineer. For this purpose, reference shall be made to the values of the indices at stated dates (quoted in the fourth and fifth columns respectively of the table) for the purposes of clarification of the source; although these dates (and thus these values) may not correspond to the base cost indices.

13.8.5 In cases where the "currency of index" is not the relevant currency of payment, each index shall be converted into the relevant currency of payment at the selling rate, established by the central Procuring Entity of the Country, of this relevant currency on the above date for which the index is required to be applicable.

13.8.6 Until such time as each current cost index is available, the Engineer shall determine a provisional index for the issue of Interim Payment Certificates. When a current cost index is available, the adjustment shall be recalculated accordingly.

13.8.7 If the Contractor fails to complete the Works within the Time for Completion, adjustment of prices thereafter shall be made using either (i) each index or price applicable on the date 49 days prior to the expiry of the Time for Completion of the Works, or (ii) the current index or price, which ever is more favorable to the Procuring Entity.

13.8.8 The weightings (coefficients) for each of the factors of cost stated in the table(s) of adjustment data shall only be adjusted if they have been rendered unreasonable, unbalanced or inapplicable, as a result of Variations.

14. CONTRACT PRICE AND PAYMENT

14.1 The Contract Price

14.1.1 Unless otherwise stated in the Particular Conditions:

a) the Contract Price shall be agreed or determined under Sub-Clause 12.3 [Evaluation] and be subject to adjustments in accordance with the Contract;
b) the Contractor shall pay all taxes, duties and fees required to be paid by him under the Contract, and the Contract Price shall not be adjusted for any of these costs except as stated in Sub-Clause 13.7 [Adjustments for Changes in Legislation];
c) any quantities which may be set out in the Bills of Quantities or other Schedule are estimated quantities and are not to be taken as the actual and correct quantities:
   i) of the Works which the Contractor is required to execute, or
   ii) for the purposes of Clause 12 [Measurement and Evaluation]; and
d) the Contractor shall submit to the Engineer, within 30 days after the Commencement Date, a proposed breakdown of each lumpsum price in the Schedules.

14.1.2 The Engineer may take account of the breakdown when preparing Payment Certificates, but shall not be bound by it.

14.1.3 Not withstanding the provisions of subparagraph (b), Contractor's Equipment, including essential spare parts there for, imported by the Contractor for the sole purpose of executing the Contract shall be exempt from the payment of import duties and taxes upon importation.

14.2 Advance Payment

14.2.1 The Procuring Entity shall make an advance payment, as an interest- free loan for mobilization and cashflow support, when the Contractor submits a guarantee in accordance with this Sub-Clause. The total advance payment, the number and timing of instalments (if more than one), and the applicable currencies and proportions, shall be as stated in the **SCC**. Unless and until the Procuring Entity receives this guarantee, or if the total advance payment is not stated in the **SCC**, this Sub-Clause shall not apply.

14.2.2 The Engineer shall deliver to the Procuring Entity and to the Contractor an Interim Payment Certificate for the advance payment or its first instalment after receiving a Statement (under Sub-Clause 14.3 [Application for Interim Payment Certificates]) and after the Procuring Entity receives (i) the Performance Security in accordance with Sub-Clause 4.2 [Performance Security] and (ii) a guarantee in amounts and currencies equal to the advance payment. This guarantee shall be issued by a reputable Procuring Entity or financial institution selected by the Contractor and shall be in the form annexed to the Particular Conditions or in another form approved by the Procuring Entity.

14.2.3 The Contractor shall ensure that the guarantee is valid and enforceable until the advance payment has been repaid, but its amount shall be progressively reducedbytheamountrepaidbytheContractorasindicatedinthe Payment Certificates. If the terms of the guarantee specify its expiry date, and the advance payment has not been repaid by the date 30 days prior to the expiry date, the Contractor shall extend the validity of the guarantee until the advance payment has been repaid.

14.2.4 Unless stated otherwise in the SCC, the advance payment shall be repaid through percentage deductions from the interim payments determined by the Engineer in accordance with Sub-Clause 14.6 [Issue of Interim PaymentCertificates], as follows:

a) Deductions shall commence in the next interim Payment Certificate following that in which the total of all certified interim payments (excluding the advance payment and deductions and repayments of retention) exceeds 30 percent (30%) of the Accepted Contract Amount less Provisional Sums; and
b) Deductions shall be made at the amortization rate stated in the **SCC** of the amount of each Interim Payment Certificate (excluding the advance payment and deductions for its repayments as well as deductions for retention money) in the currencies and proportions of the advance payment until such time as the advance payment has been repaid; provided that the advance payment shall be completely repaid prior to the time when 90 percent (90%) of the Accepted Contract Amount less Provisional Sums has been certified for payment.

14.2.5 If the advance payment has not been repaid prior to the issue of the Taking-Over Certificate for the Works or prior to termination under Clause 15 [Termination by Procuring Entity], Clause 16 [Suspension and Termination by Contractor] or Clause 19 [Force Majeure] (as the case may be), the whole of the balance then outstanding shall immediately become due and in case of termination under Clause 15 [Termination by Procuring Entity], except for Sub-Clause 15.5 [Procuring Entity's Entitlement to Termination for Convenience], payable by the Contractor to the Procuring Entity.

14.3 Application for Interim Payment Certificates

14.3.1 The Contractor shall submit a Statement in six copies to the Engineer after the end of each month, in aform approved by the Engineer, showing in detail the amounts to which the Contractor considers itself to been titled, together with supporting documents which shall include the report on the progress during this month in accordance with Sub-Clause 4.21 [Progress Reports].

14.3.2 The Statement shall include the following items, as applicable, which shall be expressed in the various currencies in which the Contract Price is payable, in the sequence listed:

a) the estimated contract value of the Works executed and the Contractor's Documents produced up to the end of the month (including Variations but excluding items described in sub-paragraphs (b) to (g) below);
b) any amounts to be added and deducted for changes in legislation and changes in cost, in accordance with Sub-Clause 13.7 [Adjustments for Changes in Legislation] and Sub-Clause 13.8 [Adjustments for Changes in Cost];
c) any amount to be deducted for retention, calculated by applying the percentage of retention stated in the **SCC** to the total of the above amounts, until the amount so retained by the Procuring Entity reaches the limit of Retention Money (if any) stated in the **SCC**;
d) any amounts to be added for the advance payment and (if more than one instalment) and to be deducted for its repayments in accordance with Sub-Clause 14.2 [Advance Payment];
e) any amounts to be added and deducted for Plant and Materials in accordance with Sub-Clause14.5[Plant and Materials intended for the Works];
f) any other additions or deductions which may have become due under the Contract or otherwise, including those under Clause 20 [Claims, Disputes and Arbitration]; and
g) the deduction of amounts certified in all previous Payment Certificates.

14.3.3 Where the contract price is different from the corrected tender price, in order to ensure the contractor is not paid less or more relative to the contract price (*which would be the tender price*), payment valuation certificates and variation orders on omissions and additions valued based on rates in the Bill of Quantities or schedule of rates in the Tender, will be adjusted by a plus or minus percentage. The percentage already worked out during tender evaluation is worked out as follows: *(corrected tender price–tender price)/tender priceX100*.

14.4 Schedule of Payments

14.4.1 If the Contract includes a schedule of payments specifying the instalments in which the Contract Price will be paid, then unless otherwise stated in this schedule:

a) The instalments quoted in this schedule of payments shall be the estimated contract values for the purposes of sub-paragraph (a) of Sub-Clause 14.3 [Application for Interim Payment Certificates];
b) Sub-Clause14.5[Plantand Materials intended for the Works] shall not apply; and
c) If these instalments are not defined by reference to the actual progress achieved in executing the Works, and if actual progress is found to be less or more than that on which this schedule of payments was based, then the Engineer may proceed in accordance with Sub-Clause 3.5 [Determinations] to agree or determine revised instalments, which shall take account of the extent to which progress is less or more than that on which the instalments were previously based.

14.4.2 If the Contract does not include a schedule of payments, the Contractor shall submit non-binding estimates of the payments which he expects to become due during each quarterly period. The first estimate shall be submitted within 42 days after the Commencement Date. Revised estimates shall be submitted at quarterly intervals, until the Taking-Over Certificate has been issued for the Works.

14.5 **Plant and Materials intended for the Works** *(see SCC for lists)*

14.5.1 If this Sub-Clause applies, Interim Payment Certificates shall include, under sub-paragraph (e) of Sub-Clause 14.3, (i) an amount for Plant and Materials which have been sent to the Site for incorporation in the Permanent Works, and (ii) a reduction when the contract value of such Plant and Materials is included as part of the Permanent Works under sub-paragraph (a) of Sub-Clause 14.3 [Application for Interim Payment Certificates].

14.5.2 If the lists referred to in sub-paragraphs (b) (i) or (c) (i) below are not included in the Schedules, this Sub-Clause shall not apply. The Engineer shall determine and certify each addition if the following conditions are satisfied:

a) The Contractor has:
   i) Kept satisfactory records (including the orders, receipts, Costs and use of Plant and Materials) which are available for inspection, and
   ii) Submitted a statement of the Cost of acquiring and delivering the Plant and Materials to the Site, supported by satisfactory evidence;
   and either:
b) The relevant Plant and Materials:
   i) Are those listed in the Schedules for payment when shipped,
   ii) Have been shipped to the Country, enroute to the Site, in accordance with the Contract; and
   iii) are described in a clean shipped bill of lading or other evidence of shipment, which has been submitted to the Engineer together with evidence of payment of freight and insurance, any other documents reasonably required, and an Procuring Entity guarantee in a form and issued by an entity approved by the Procuring Entity in amounts and currencies equal to the amount due under this Sub-Clause: this guarantee may be in a similar form to the form referred to in Sub-Clause 14.2[Advance Payment] and shall be valid until the Plant and Materials are properly stored on Site and protected against loss, damage or deterioration;
c) the relevant Plant and Materials:
   i) are those listed in the Schedules for payment when delivered to the Site, and
   ii) have been delivered to and are properly stored on the Site, are protected against loss, damage or deterioration, and appear to be in accordance with the Contract.

14.5.3 The additional amount to be certified shall be the equivalent of eighty percent (80%) of the Engineer's determination of the cost of the Plant and Materials (including delivery to Site), taking account of the documents mentioned in this Sub-Clause and of the contract value of the Plant and Materials.

14.5.4 The currencies for this additional amount shall be the same as those in which payment will become due when the contract value is included under sub-paragraph (a) of Sub-Clause 14.3 [Application for Interim Payment Certificates]. At that time, the Payment Certificate shall include the applicable reduction which shall be equivalent to, and in the same currencies and proportions as, this additional amount for the relevant Plant and Materials.

14.6 Issue of Interim Payment Certificates

14.6.1 No amount will be certified or paid until the Procuring Entity has received and approved the Performance Security. Thereafter, the Engineer shall, within 30 days after receiving a Statement and supporting documents, deliver to the Procuring Entity and to the Contractor an Interim Payment Certificate which shall

state the amount which the Engineer fairly determines to be due, with all supporting particulars for any reduction or withholding made

However, prior to issuing the Taking-Over Certificate for the Works, the Engineer shall not be bound to issue an Interim Payment Certificate in an amount which would (after retention and other deductions) be less than the minimum amount of Interim Payment Certificates (if any) stated in the **SCC**. In this event, the Engineer shall give notice to the Contractor accordingly.

14.6.2 An Interim Payment Certificate shall not be withheld for any other reason, although:

a) if anything supplied or work done by the Contractor is not in accordance with the Contract, the cost of rectification or replacement may bewithheld until rectification or replacement has been completed; and/or

b) if the Contractor was or is failing to perform any work or obligation in accordance with the Contract, and had been so notified by the Engineer, the value of this work or obligation may be withheld until the work or obligation has been performed.

14.6.3 The Engineer may in any Payment Certificate make any correction or modification that should properly be made to any previous Payment Certificate. A Payment Certificate shall not be deemed to indicate the Engineer's acceptance, approval, consent or satisfaction.

14.7 Payment

14.7.1 The Procuring Entity shall pay to the Contractor:

a) The first instalment of the advance payment within 42 days after issuing the Letter of Acceptance or within 21 days after receiving the documents in accordance with Sub-Clause 4.2 [Performance Security] and Sub-Clause 14.2 [Advance Payment], whichever is later;

b) the amount certified in each Interim Payment Certificate within 56 days after the Engineer receives the Statement and supporting documents; or, at a time when the Procuring Entity's loan or credit (from which part of the payments to the Contractor is being made) is suspended, the amount shown on any statement submitted by the Contractor within 14 days after such statement is submitted, any discrepancy being rectified in the next payment to the Contractor; and

c) the amount certified in the Final Payment Certificate within 56 days after the Procuring Entity receives this Payment Certificate; or, at a time when the Procuring Entity's loan or credit (from which part of the payments to the Contractor is being made) is suspended, the undisputed amount shown in the Final Statement within 56 days after the date of notification of the suspension in accordance with Sub-Clause 16.2 [Termination by Contractor].

14.7.2 Payment of the amount due in each currency shall be made in to the Procuring Entity account, nominated by the Contractor, in the payment country (for this currency) specified in the Contract.

14.8 Delayed Payment

If the Contractor does not receive payment in accordance with Sub-Clause 14.7 [Payment], the Contractor shall be entitled to receive financing charges compounded monthly on the amount unpaid during the period of delay. This period shall be deemed to commence on the date for payment specified in Sub-Clause 14.7 [Payment], irrespective (in the case of its sub-paragraph (b)) of the date on which any Interim Payment Certificate isissued.

Unless otherwise stated in theParticular Conditions, these financing charges shall be calculated at the annual rate of three percentage points above the discount rate of the central Procuring Entity in the country of the currency of payment, or if not available, the inter-Procuring Entity offered rate, and shall be paid in such currency.

The Contractor shall be entitled to this payment without formal notice or certification, and without prejudice to any other right or remedy.

14.9 Payment of Retention Money

14.9.1 When the Taking-Over Certificate has been issued for the Works, the first half of the Retention Money shall be certified by the Engineer for payment to the Contractor. If a Taking-Over Certificate is issued for a Section or part of the Works, a proportion of the Retention Money shall be certified and paid. This proportion shall be half

(50%) of the proportion calculated by dividing the estimated contract value of the Section or part, by the estimated final Contract Price.

14.9.2 Promptly after the latest of the expiry dates of the Defects Notification Periods, the outstanding balance of the Retention Money shall be certified by the Engineer for payment to the Contractor. If a Taking-Over Certificate was issued for a Section, a proportion of the second half of the Retention Money shall be certified and paid promptly after the expiry date of the Defects Notification Period for the Section. This proportion shall be half (50%) of the proportion calculated by dividing the estimated contract value of the Section by the estimated final Contract Price.

14.9.3 However, if any work remains to be executed under Clause 11 [Defects Liability], the Engineer shall be entitled to withhold certification of the estimated cost of this work until it has been executed.

14.9.4 When calculating these proportions, no account shall be taken of any adjustments under Sub-Clause 13.7 [Adjustments for Changes in Legislation] and Sub-Clause 13.8 [Adjustments for Changes in Cost].

14.9.5 Unless otherwise stated in the Particular Conditions, when the Taking-Over Certificate has been issued for the Works and the first half of the Retention Money has been certified for payment by the Engineer, the Contractor shall be entitled to substitute a guarantee, in the form annexed to the Particular Conditions or in another form approved by the Procuring Entity and issued by a reputable Procuring Entity or financial institution selected by the Contractor, for the second half of the Retention Money. The Contractor shall ensure that the guarantee is in the amounts and currencies of the second half of the Retention Money and is valid and enforceable until the Contract or has executed and completed the Works and remedied any defects, as specified for the Performance Security in Sub-Clause 4.2. On receipt by the Procuring Entity of the required guarantee, the Engineer shall certify and the Procuring Entity shall pay the second half of the Retention Money. The release of the second half of the Retention Money against a guarantee shall then be in lieu of the release under the second paragraph of this Sub-Clause. The Procuring Entity shall return the guarantee to the Contractor within 21 days after receiving a copy of the Performance Certificate.

14.9.6 If the Performance Security required under Sub-Clause 4.2 is in the form of a demand guarantee, and the amount guaranteed under it when the Taking-Over Certificate is issued is more than half of the Retention Money, then the Retention Money guarantee will not be required. If the amount guaranteed under the Performance Security when the Taking-Over Certificate isissued is less than half of the Retention Money, the Retention Money guarantee will only be required for the difference between half of the Retention Money and the amount guaranteed under the Performance Security.

14.10 Statement at Completion

Within 84 days after receiving the Taking-Over Certificate for the Works, the Contractor shall submit tothe Engineer six copies of a Statement at completion with supporting documents, in accordance with Sub-Clause
14.3 [Application for Interim Payment Certificates], showing:

a) the value of all work done in accordance with the Contract up to the date stated in the Taking-Over Certificate for the Works,
b) any further sums which the Contractor considers to be due, and
c) an estimate of any other amounts which the Contractor considers will become due to him under the Contract. Estimated amounts shall be shown separately in this Statement at completion.

The Engineer shall then certify in accordance with Sub-Clause 14.6 [Issue of Interim Payment Certificates].

14.11 Application for Final Payment Certificate

14.11.1 Within 56 days after receiving the Performance Certificate, the Contractor shall submit, to the Engineer, six copies of a draft final statement with supporting documents showing in detail in a form approved by the Engineer:

a) The value of all work done in accordance with the Contract, and
b) Any further sums which the Contractor considers to be due to him under the Contractor otherwise.

14.11.2 If the Engineer disagrees with or cannot verify any part of the draft final statement, the Contractor shall submit such further information as the Engineer may reasonably require within 30 days from receipt of said draft and shall make such changes in the draft as may be agreed between them. The Contractor shall then prepare and submit to the Engineer the final statement as agreed. This agreed statement is referred to in these Conditions as the “Final Statement”.

14.11.3 However, if, following discussions between the Engineer and the Contractor and any changes to the draft

final statement which are agreed, it becomes evident that a dispute exists, the Engineer shall deliver to the Procuring Entity (with a copy to the Contractor) an Interim Payment Certificate for the agreed parts of the draft final statement. Thereafter, if the dispute is finally resolved under Sub-Clause 20.4 [Obtaining Dispute Board's Decision] or Sub-Clause 20.5 [Amicable Settlement], the Contractor shall then prepare and submit to the Procuring Entity (with a copy to the Engineer) a Final Statement.

14.12 Discharge

When submitting the Final Statement, the Contractor shall submit a discharge which confirms that the total of the Final Statement represents full and final settlement of all moneys due to the Contractor under or in connection with the Contract. This discharge may state that it becomes effective when the Contractor has received the Performance Security and the outstanding balance of this total, in which event the discharge shall be effective on such date.

14.13 Issue of Final Payment Certificate

14.13.1 Within 30 days after receiving the Final Statement and discharge in accordance with Sub-Clause 14.11 [Application for Final Payment Certificate] and Sub-Clause 14.12 [Discharge], the Engineer shall deliver, to the Procuring Entity and to the Contractor, the Final Payment Certificate which shall state:

(a) The amount which he fairly determines is finally due, and
(b) After giving credit to the Procuring Entity for all amounts previously paid by the Procuring Entity and for all sums to which the Procuring Entity is entitled, the balance (if any) due from the Procuring Entity to the Contractor or from the Contractor to the Procuring Entity, as the case may be.

14.13.1 If the Contractor has not applied for a Final Payment Certificate in accordance with Sub-Clause 14.11 [Application for Final Payment Certificate] and Sub-Clause 14.12 [Discharge], the Engineer shall request the Contractor to do so. If the Contractor fails to submit an application within a period of 30 days, the Engineer shall issue the Final Payment Certificate for such amount as he fairly determines to be due.

14.14 Cessation of Procuring Entity's Liability

14.14.1 The Procuring Entity shall not be liable to the Contractor for any matter or thing under or in connection with the Contract or execution of the Works, except to the extent that the Contractor shall have included an amount expressly for it:
a) In the Final Statement and also
b) (except for matters or things arising after the issue of the Taking-Over Certificate for the Works) in the Statement at completion described in Sub-Clause 14.10[Statement at Completion].

14.14.2 However, this Sub-Clause shall not limit the Procuring Entity'sliabilityunderhisindemnificationobligations, or the Procuring Entity's liability in any case of fraud, deliberate default or reckless misconduct by the ProcuringEntity.

14.15 Currencies of Payment

The Contract Price shall be paid in the currency or currencies named in the Schedule of Payment Currencies.If more than one currency is so named, payments shall be made as follows:
a) If the Accepted Contract Amount was expressed in Local Currency only:
   (i) The proportions or amounts of the Local and Foreign Currencies, and the fixed rates of exchange to be used for calculating the payments, shall be as stated in the Schedule of Payment Currencies, except as otherwise agreed by both Parties;
   ii) payments and deductions under Sub-Clause 13.5 [Provisional Sums] and Sub-Clause 13.7 [Adjustments for Changes in Legislation] shall be made in the applicable currencies and proportions; and
   iii) other payments and deductions under sub-paragraphs (a) to (d) of Sub-Clause 14.3 [Application for Interim Payment Certificates] shall be made in the currencies and proportions specified in sub-paragraph (a) (i) above;

b) payment of the damages specified in the **SCC**, shall be made in the currencies and proportions specified in the Schedule of Payment Currencies;
c) other payments to the Procuring Entity by the Contractor shall be made in the currency in which the sum was expended by the Procuring Entity, or in such currency as may be agreed by both Parties;
d) if any amount payable by the Contractor to the Procuring Entity in a particular currency exceeds the sum payable by the Procuring Entity to the Contractor in that currency, the Procuring Entity may recover the balance of this amount from the sums otherwise payable to the Contractor in other currencies; and
e) if no rates of exchange are stated in the Schedule of Payment Currencies, they shall be those prevailing on the Base Date and determined by the central Procuring Entity of the Country.

15. TERMINATION BY PROCURING ENTITY

15.1 Notice to Correct

If the Contractor fails to carry out any obligation under the Contract, the Engineer may by notice require the Contractor to make good the failure and to remedy it within a specified reasonable time.

15.2 Termination by Procuring Entity

15.2.1 The Procuring Entity shall be entitled to terminate the Contract if the Contractor:
a) fails to comply with Sub-Clause 4.2 [Performance Security] or with a notice under Sub-Clause 15.1 [Notice to Correct],
b) abandons the Works or otherwise plainly demonstrates the intention not to continue performance of his obligations under the Contract,
c) without reasonable excuse fails:
   (i) to proceed with the Works in accordance with Clause 8 [Commencement, Delays and Suspension], or
   ii) to comply with a notice issued under Sub-Clause 7.5 [Rejection] or Sub-Clause 7.6 [Remedial Work], within 30 days after receiving it,
d) subcontracts the whole of the Works or as signs the Contract without the required agreement,
e) becomes bankrupt or insolvent, goes into liquidation, has a receiving or administration order made against him, compounds with his creditors, or carries on business under a receiver, trustee or manager for the benefit of his creditors, or if any act is done or event occurs which (under applicable Laws) has a similar effect to any of these acts or events, or
f) gives or offers to give (directly or indirectly) to any person any bribe, gift, gratuity, commission or other thing of value, as an inducement or reward:
   i) for doing or forbearing to do any action in relation to the Contract, or
   ii) for showing or for bearing to show favor or disfavor to any person in relation to the Contract,
   or if any of the Contractor's Personnel, agents or Subcontractors gives or offers to give (directly or indirectly) to any person any such inducement or reward as is described in this sub-paragraph (f). However, lawful inducements and rewards to Contractor's Personnel shall not entitle termination, or
g) based on reasonable evidence, has engaged in Fraud and Corruption as defined in paragraph 2.2 of the Appendix B to these General Conditions, in competing for or in executing the Contract.

15.2.2 In any of these events or circumstances, the Procuring Entity may, upon giving 14 days' notice to the Contractor, terminate the Contract and expel the Contractor from the Site. However, in the case of sub-paragraph (e) or (f) or (g), the Procuring Entity may by notice terminate the Contract immediately.

15.2.3 The Procuring Entity's election to terminate the Contract shall not prejudice any other rights of the Procuring Entity, under the Contract or otherwise.

The Contractor shall then leave the Site and deliver any required Goods, all Contractor's Documents, and other design documents made by or for him, to the Engineer. However, the Contractor shall use his Lowest efforts to comply immediately with any reasonable instructions included in the notice (i) for the assignment of any subcontract, and (ii) for the protection of life or property or for the safety of the Works.

After termination, the Procuring Entity may complete the Works and/or arrange for any other entities to do so. The Procuring Entity and these entities may then use any Goods, Contractor's Documents and other design documents made by or on behalf of the Contractor.

The Procuring Entity shall then give notice that the Contractor's Equipment and Temporary Works will be released to the Contractor at or near the Site. The Contractor shall promptly arrange their removal, at the risk and cost of the Contractor. However, if by this time the Contractor has failed to make a payment due to the Procuring Entity, these items may be sold by the Procuring Entity in order to recover this payment. Any balance of the proceeds shall then be paid to the Contractor.

15.3 Valuation at Date of Termination

As soon as practicable after a notice of termination under Sub-Clause 15.2 [Termination by Procuring Entity] has taken effect, the Engineer shall proceed in accordance with Sub-Clause 3.5 [Determinations] to agree or determine the value of the Works, Goods and Contractor's Documents, and any other sums due to the Contractor for work executed in accordance with the Contract.

15.4 Payment after Termination

After a notice of termination under Sub-Clause 15.2 [Termination by Procuring Entity] has taken effect, the Procuring Entity may:

a) Proceed in accordance with Sub-Clause 2.5 [Procuring Entity's Claims],

b) Withhold further payments to the Contractor until the costs of execution, completion and remedying of any defects, damages for delay in completion (if any), and all other costs incurred by the Procuring Entity, have been established, and/or

c) Recover from the Contractor any losses and damages incurred by the Procuring Entity and any extra costs of completing the Works, after allowing for any sum due to the Contractor under Sub-Clause 15.3 [Valuation at Date of Termination]. After recovering any such losses, damages and extra costs, the Procuring Entity shall pay any balance to the Contractor.

15.5 Procuring Entity's Entitlement to Termination for Convenience

15.5.1 The Procuring Entity shall be entitled to terminate the Contract, at any time for the Procuring Entity's convenience, by giving notice of such termination to the Contractor. The termination shall take effect 30 days after the later of the dates on which the Contractor receives this notice or the Procuring Entity returns the Performance Security. The Procuring Entity shall not terminate the Contract under this Sub-Clause in order to execute the Works itself or to arrange for the Works to be executed by another contractor or to avoid a termination of the Contract by the Contractor under Clause 16.2[Termination by Contractor].

15.5.2 After this termination, the Contractor shall proceed in accordance with Sub-Clause 16.3 [Cessation of Work and Removal of Contractor's Equipment] and shall be paid in accordance with Sub-Clause 16.4 [Payment on Termination].

15.6 Fraud and Corruption

The Procuring Entity requires compliance with the national law and regulations against corruption. All available sanctions will apply where corruption is detected.

16. SUSPENSION AND TERMINATION BY CONTRACTOR

16.1 Contractor's Entitlement to Suspend Work

16.1.1 If the Engineer fails to certify in accordance with Sub-Clause 14.6 [Issue of Interim Payment Certificates] or the Procuring Entity fails to comply with Sub-Clause 2.4 [Procuring Entity's Financial Arrangements] or Sub- Clause 14.7 [Payment], the Contractor may, after giving not less than 21days' notice to the Procuring Entity, suspend work (or reduce the rate of work) unless and until the Contractor has received the Payment Certificate, reasonable evidence or payment, as the case may be and as described in the notice.

16.1.2 Not withstanding the above, if the Procuring Entity has suspended disbursements under the loan or credit from which payments to the Contractor are being made, in whole or in part, for the execution of the Works, and no alternative funds are available as provided for in Sub-Clause 2.4 [Procuring Entity's Financial Arrangements], the Contractor may by notice suspend work or reduce the rate of work at any time, but not less than 7 days after the Procuring Entity having received the suspension notification from the Procuring Entity.

16.1.3 The Contractor's action shall not prejudice his entitlements to financing charges under Sub-Clause 14.8 [Delayed Payment] and to termination under Sub-Clause 16.2[Termination by Contractor].

16.1.4 If the Contractor subsequently receives such Payment Certificate, evidence or payment (as described in the relevant Sub-Clause and in the above notice) before giving a notice of termination, the Contractor shall resume normal working as soon as is reasonably practicable.

16.1.5 If the Contractor suffers delay and/or incurs Cost as a result of suspending work (or reducing the rate of work) in accordance with this Sub-Clause, the Contractor shall give notice to the Engineer and shall be entitled subject to Sub-Clause 20.1 [Contractor's Claims] to:

a) an extension of time for any such delay, if completion is or will be delayed, under Sub-Clause 8.4 [Extension of Time for Completion], and
b) payment of any such Cost-plus profit, which shall be included in the Contract Price.

16.1.6 After receiving this notice, the Engineers hall proceed in accordance with Sub-Clause 3.5 [Determinations] to agree or determine these matters.

16.2 Termination by Contractor

16.2.1 The Contractor shall be entitled to terminate the Contract if:

a) the Contractor does not receive the reasonable evidence within 42 days after giving notice under Sub-Clause 16.1 [Contractor's Entitlement to Suspend Work] in respect of a failure to comply with Sub-Clause 2.4 [Procuring Entity's Financial Arrangements],
b) the Engineer fails, within 56 days after receiving a Statement and supporting documents, to issue the relevant Payment Certificate,
c) the Contractor does not receive the amount due under an Interim Payment Certificate within 42 days after the expiry of the time stated in Sub-Clause 14.7 [Payment] within which payment is to be made (except for deductions in accordance with Sub-Clause 2.5 [Procuring Entity's Claims]),
d) the Procuring Entity substantially fails to perform his obligations under the Contract in such manner as to materially and adversely affect the economic balance of the Contract and/or the ability of the Contractor to perform the Contract,
e) the Procuring Entity fails to comply with Sub-Clause 1.6 [Contract Agreement] or Sub-Clause 1.7 [Assignment],
f) a prolonged suspension affects the whole of the Works as described in Sub-Clause 8.11 [Prolonged Suspension], or
g) the Procuring Entity becomes bankrupt or insolvent, goes into liquidation, has a receiving or administration order made against him, compounds with his creditors, or carries on business under a receiver, trustee or manager for the benefit of his creditors, or if any act is done or event occurs which (under applicable Laws) has a similar effect to any of these acts or events.
h) The Contractor does not receive the Engineer's instruction recording the agreement of both Parties on the fulfilment of the conditions for the Commencement of Works under Sub-Clause 8.1 [Commencement of Works.

16.2.2 In any of these events or circumstances, the Contractor may, upon giving 14 days' notice to the Procuring Entity, terminate the Contract. However, in the case of sub-paragraph (f) or (g), the Contractor may by notice terminate the Contract immediately.

16.2.3 In the event the Procuring Entity suspends the loan or credit from which part or whole of the payments to the Contractor are being made, if the Contractor hasnot received the sums due to him upon expiration of the14 days referred to in Sub-Clause 14.7 [Payment] for payments under Interim Payment Certificates, the Contractor may, without prejudice to the Contractor's entitlement to financing charges under Sub-Clause14.8 [Delayed Payment], take one of the following actions, namely (i) suspend work or reduce the rate of work under Sub-Clause 16.1 above, or (ii) terminate the Contract by giving notice to the Procuring Entity, with a copy to the Engineer, such termination to take effect 14 days after the giving of the notice.

The Contractor's election to terminate the Contract shall not prejudice any other rights of the Contractor, under the Contract or otherwise.

16.3 Cessation of Work and Removal of Contractor's Equipment

After a notice of termination under Sub-Clause 15.5 [Procuring Entity's Entitlement to Termination for Convenience], Sub-Clause 16.2 [Termination by Contractor] or Sub-Clause 19.6 [Optional Termination, Payment and Release] has taken effect, the Contractor shall promptly:

a) Cease all further work, except for such work as may have been instructed by the Engineer for the protection of life or property or for the safety of the Works,

b) Handover Contractor's Documents, Plant, Materials and other work, for which the Contractor has received payment, and

c) Remove all other Goods from the Site, except as necessary for safety, and leave the Site.

16.4 Payment on Termination

After a notice of termination under Sub-Clause 16.2 [Termination by Contractor] has taken effect, the Procuring Entity shall promptly:

a) Return the Performance Security to the Contractor,

b) pay the Contractor in accordance with Sub-Clause 19.6 [Optional Termination, Payment and Release], and

c) pay to the Contractor the amount of any loss or damage sustained by the Contractor as a result of this termination.

17. RISK AND RESPONSIBILITY

17.1 Indemnities

17.1.1 The Contractor shall indemnify and hold harmless the Procuring Entity, the Procuring Entity's Personnel, and their respective agents, against and from all claims, damages, losses and expenses (including legal fees and expenses) in respect of:

(a) Bodily injury, sickness, disease or death, of any person whatsoever arising out of or in the course of or by reason of the Contractor's design (if any), the execution and completion of the Works and the remedying of any defects, unless attributable to any negligence, willful actor breach of the Contract by the Procuring Entity, the Procuring Entity's Personnel, or any of the irrespective agents, and

(b) Damage to or loss of any property, real or personal (other than the Works), to the extent that such damage or loss arises out of or in the course of or by reason of the Contractor's design (if any), the execution and completion of the Works and the remedying of any defects, unless and to the extent that any such damage or loss is attributable to any negligence, willful act or breach of the Contract by the Procuring Entity, the Procuring Entity's Personnel, the irrespective agents, or any one directly or indirectly employed by any of them.

17.1.2 The Procuring Entity shall indemnify and hold harmless the Contractor, the Contractor's Personnel, and their respective agents, against and from all claims, damages, losses and expenses (including legal fees and expenses) in respect of (1) bodily injury, sickness, disease or death, which is attributable to any negligence, willful act or breach of the Contract by the Procuring Entity, the Procuring Entity's Personnel, or any oftheir respective agents, and (2) the matters for which liability may be excluded from insurance cover, as described in sub-paragraphs (d)(i), (ii) and (iii) of Sub-Clause 18.3 [Insurance Against Injury to Persons and Damage to Property].

17.2 Contractor's Care of the Works

17.2.1 The Contractor shall take full responsibility for the care of the Works and Goods from the Commencement Date until the Taking-Over Certificate is issued (or is deemed to be issued under Sub-Clause 10.1 [Taking Over of the Works and Sections]) for the Works, when responsibility for the care of the Works shall pass to the Procuring Entity. If a Taking-Over Certificate is issued (or is so deemed to be issued) for any Section or part of the Works, responsibility for the care of the Section or part shall then pass to the Procuring Entity.

17.2.2 After responsibility has accordingly passed to the Procuring Entity, the Contractor shall take responsibility for the care of any work which is outstanding on the date stated in a Taking-Over Certificate, until this outstanding work has been completed.

17.2.3 If any loss or damage happens to the Works, Goods or Contractor's Documents during the period when the Contractor is responsible for their care, from any cause not listed in Sub-Clause 17.3 [Procuring Entity's Risks], the Contractor shall rectify the loss or damage at the Contractor's risk and cost, so that the Works, Goods and Contractor's Documents conform with the Contract.

17.2.4 The Contractor shall be liable for any loss or damage caused by any actions performed by the Contractor aftera Taking-Over Certificate has been issued. The Contractor shall also be liable for any loss or damage which occurs after a Taking-Over Certificate has been issued and which arose from a previous event for which the Contractor was liable.

17.3 Procuring Entity's Risks

The risks referred to in Sub-Clause 17.4 [Consequences of Procuring Entity's Risks] below, insofar as they directly affect the execution of the Works in the Country, are:

a) war, hostilities (whether war be declared or not), invasion, act of foreign enemies,
b) rebellion, terrorism, sabotage by persons other than the Contractor's Personnel, revolution, insurrection, military or usurped power, or civil war, within the Country,
c) riot, commotion or disorder within the Country by persons other than the Contractor's Personnel,
d) munitions of war, explosive materials, ionizing radiation or contamination by radio-activity, within the Country, except as may be attributable to the Contractor's use of such munitions, explosives, radiation or radio-activity,
e) pressure waves caused by aircraft or other aerial devices traveling at sonic or supersonic speeds,
f) use or occupation by the Procuring Entity of any part of the Permanent Works, except as may be specified in the Contract,
g) design of any part of the Works by the Procuring Entity's Personnel or by others for whom the Procuring Entity is responsible, and
h) any operation of the forces of nature which is Unforeseeable or against which an experienced contractor could not reasonably have been expected to have taken adequate preventive precautions.

17.4 Consequences of Procuring Entity's Risks

17.4.1 If and to the extent that any of the risks listed in Sub-Clause 17.3 above results in loss or damage to the Works, Goods or Contractor's Documents, the Contractor shall promptly give notice to the Engineer and shall rectify this loss or damage to the extent required by the Engineer.

17.4.2 If the Contractor suffers delay and/or incurs Cost from rectifying this loss or damage, the Contractor shall give a further notice to the Engineer and shall be entitled subject to Sub-Clause 20.1[Contractor's Claims] to:

a) an extension of time for any such delay, if completion is or will be delayed, under Sub-Clause 8.4 [Extension of Time for Completion], and
b) payment of any such Cost, which shall be included in the Contract Price. In the case of sub-paragraphs (f) and (g) of Sub-Clause 17.3 [Procuring Entity's Risks], Cost plus profit shall be payable.

17.4.3 After receiving this further notice, the Engineer shall proceed in accordance with Sub-Clause 3.5 [Determinations] to agree or determine these matters.

17.5 Intellectual and Industrial Property Rights

17.5.1 In this Sub-Clause, "infringement" means an infringement (or alleged infringement) of any patent, registered design, copyright, trademark, tradename, trade secret or other intellectual or industrial property right relating to the Works; and "claim" means a claim (or proceedings pursuing a claim) alleging an infringement.

17.5.2 Whenever a Party does not give notice to the other Party of any claim within 30 days of receiving the claim, the first Party shall be deemed to have waived any right to indemnity under this Sub-Clause.

17.5.3 The Procuring Entity shall indemnify and hold the Contractor harmless against and from any claim alleging an infringement which is or was:

a) An unavoidable result of the Contractor's compliance with the Contract, or
b) A result of any Works being used by the Procuring Entity:

i) For a purpose other than that indicated by, or reasonably to be inferred from, the
ii) Contract, or
iii) in conjunction with anything not supplied by the Contractor, unless such use was disclosed to the Contractor prior to the Base Date or is stated in the Contract.

17.5.4 The Contractor shall indemnify and hold the Procuring Entity harmless against and from any other claim which arises out of or in relation to (i) the manufacture, use, sale or import of any Goods, or (ii) any design for which the Contractor is responsible.

17.5.5 If a Party is entitled to be indemnified under this Sub-Clause, the indemnifying Party may (at its cost) conduct negotiations for the settlement of the claim, and any litigation or arbitration which may arise from it. The other Party shall, at the request and cost of the indemnifying Party, assist in contesting the claim. This other Party (and its Personnel) shall not make any admission which might be prejudicial to the indemnifying Party, unless the indemnifying Party failed to take over the conduct of any negotiations, litigation or arbitration upon being requested to do so by such other Party.

17.6 Limitation of Liability

17.6.1 Neither Party shall be liable to the other Party for loss of use of any Works, loss of profit, loss of any contractor for any indirect or consequential loss or damage which may be suffered by the other Party in connection with the Contract, other than as specifically provided in Sub-Clause 8.7 [Delay Damages]; Sub-Clause 11.2 [Cost of Remedying Defects]; Sub-Clause 15.4 [Payment after Termination]; Sub-Clause 16.4 [Payment on Termination]; Sub-Clause17.1 [Indemnities]; Sub-Clause 17.4 (b) [Consequences of Procuring Entity's Risks] and Sub-Clause 17.5[Intellectual and Industrial Property Rights].

17.6.2 The total liability of the Contractor to the Procuring Entity, under or in connection with the Contract other than under Sub-Clause 4.19 [Electricity, Water and Gas], Sub-Clause 4.20 [Procuring Entity's Equipment and Free- Issue Materials], Sub-Clause 17.1 [Indemnities] and Sub-Clause 17.5 [Intellectual and Industrial Property Rights], shall not exceed the sum resulting from the application of a multiplier (less or greater than one) to the Accepted Contract Amount, as stated in the **SCC**, or (if such multiplier or other sum is not so stated) the Accepted Contract Amount.

17.6.3 This Sub-Clause shall not limit liability in any case of fraud, deliberate default or reckless misconduct by the defaulting Party.

17.7 Use of Procuring Entity's Accommodation/Facilities

17.7.1 The Contractor shall take full responsibility for the care of the Procuring Entity provided accommodation and facilities, if any, as detailed in the Specification, from the respective dates of hand-over to the Contract or until cessation of occupation (where hand-over or cessation of occupation may take place after the date stated in the Taking-Over Certificate for theWorks).

17.7.2 If any loss or damage happens to any of the above items while the Contractor is responsible for their care arising from any cause whatsoever other than those for which the Procuring Entity is liable, the Contractor shall, at his own cost, rectify the loss or damage to the satisfaction of the Engineer.

18. INSURANCE

18.1 General Requirements for Insurances

18.1.1 In this Clause, “insuring Party” means, for each type of insurance, the Party responsible for effecting and maintaining the insurance specified in the relevant Sub-Clause.

18.1.2 Wherever the Contractor is the insuring Party, each insurance shall be effected with insurers and in terms approved by the Procuring Entity. These terms shall be consistent with any terms agreed by both Parties before the date of the Letter of Acceptance. This agreement of terms shall take precedence over the provisions of this Clause.

18.1.3 Wherever the Procuring Entity is the insuring Party, each insurance shall be effected with insurers and in terms acceptable to the Contractor. These terms shall be consistent with any terms agreed by both Parties before the date of the Letter of Acceptance. This agreement of terms shall take precedence over the provisions of this Clause.

18.1.4 If a policy is required to indemnify joint insured, the cover shall apply separately to each insured as though a separate policy had been issued for each of the joint insured. If a policy indemnifies additional joint insured, namely in addition to the insured specified in this Clause, (i) the Contractor shall act under the policy on behalf of these additional joint insured except that the Procuring Entity shall act for Procuring Entity's Personnel, (ii) additional joint insured shall not be entitled to receive payments directly from the insurer or to have any other direct dealings with the insurer, and (iii) the insuring Party shall require all additional joint insured to comply with the conditions stipulated in the policy.

18.1.5 Each policy insuring against loss or damage shall provide for payments to be made in the currencies required to rectify the loss or damage. Payments received from insurers shall be used for the rectification of the loss or damage.

18.1.6 The relevant insuring Party shall, within the respective periods stated in the **SCC** (calculated from the Commencement Date), submit to the other Party:

a) Evidence that the insurances described in this Clause have been effected, and

b) copies of the policies for the insurances described in Sub-Clause 18.2 [Insurance for Works and Contractor's Equipment] and Sub-Clause 18.3 [Insurance against Injury to Persons and Damage to Property].

18.1.7 When each premium is paid, the insuring Party shall submit evidence of payment to the other Party. Whenever evidence or policies are submitted, the insuring Party shall also give notice to the Engineer.

18.1.8 Each Party shall comply with the conditions stipulated in each of the insurance policies. The insuringParty shall keep the insurers informed of any relevant changes to the execution of the Works and ensure that insurance is maintained in accordance with this Clause.

Neither Party shall make any material alteration to the terms of any insurance without the prior approval of the other Party. If an insurer makes (or attempts to make) any alteration, the Party first notified by the insurer shall promptly give notice to the other Party.

18.1.9 The insuring Party fails to effect and keep in force any of the insurances it is required to effect and maintain under the Contract or fails to provide satisfactory evidence and copies of policies in accordance with this Sub- Clause, the other Party may (at its option and without prejudice to any other right or remedy) effect insurance for the relevant coverage and pay the premiums due. The insuring Party shall pay the amount of these premiums to the other Party, and the Contract Price shall be adjusted accordingly.

18.1.10 Nothing in this Clause limits the obligations, liabilities or responsibilities of the Contractor or the Procuring Entity, under the other terms of the Contractor otherwise. Any amounts not insured or not recovered from the insurers shall be borne by the Contractor and/or the Procuring Entity in accordance with these obligations, liabilities or responsibilities. However, if the insuring Party fails to effect and keep in force an insurance which is available and which it is required to effect and maintain under the Contract, and the other Party neither approves the omission nor effects insurance for the coverage relevant to this default, any moneys which should have been recoverable under this insurance shall be paid by the insuring Party.

18.1.11 Payments by one Party to the other Party shall be subject to Sub-Clause 2.5 [Procuring Entity's Claims] or Sub- Clause 20.1[Contractor's Claims], as applicable.

18.1.12 The Contractor shall be entitled to place all insurance relating to the Contract (including, but not limited to the insurance referred to Clause18) with insurers from any eligible source country.

18.2 Insurance for Works and Contractor's Equipment

18.2.1 The insuring Party shall insure the Works, Plant, Materials and Contractor's Documents for not less than the full reinstatement cost including the costs of demolition, removal of debris and professional fees and profit. This insurance shall be effective from the date by which the evidence is to be submitted under sub-paragraph (a) of Sub-Clause 18.1 [General Requirements for Insurances], until the date of issue of the Taking-Over Certificate for the Works.

18.2.2 The insuring Party shall maintain this insurance to provide cover until the date of issue of the Performance Certificate, for loss or damage for which the Contractor is liable arising from a cause occurring prior to the issue of the Taking-Over Certificate, and for loss or damage caused by the Contractor in the course of any other operations (including those under Clause 11 [Defects Liability]).

18.2.3 The insuring Party shall insure the Contractor's Equipment for not less than the full replacement value, including delivery to Site. For each item of Contractor's Equipment, the insurance shall be effective while it is being transported to the Site and until it is no longer required as Contractor's Equipment.

18.2.4 Unless otherwise stated in the Particular Conditions, insurances under this Sub-Clause:

a) Shall be effected and maintained by the Contractor as insuring Party,

b) shall be in the joint names of the Parties, who shall be jointly entitled to receive payments from the insurers, payments being held or allocated to the Party actually bearing the costs of rectifying the loss or damage,

c) shall cover all loss and damage from any cause not listed in Sub-Clause 17.3 [Procuring Entity's Risks],

d) shall also cover, to the extent specifically required in the tendering documents of the Contract, loss or damage to a part of the Works which is attributable to the use or occupation by the Procuring Entity of another part of the Works, and loss or damage from the risks listed in sub-paragraphs (c), (g) and (h) of Sub-Clause 17.3 [Procuring Entity's Risks], excluding (in each case) risks which are not insurable at commercially reasonable terms, with deductibles per occurrence of not more than the amount stated in the **SCC**(if an amount is not so stated, this sub-paragraph (d) shall not apply), and

e) may however exclude loss of, damage to, and reinstatement of:

i) a part of the Works which is in a defective condition due to a defect in its design, materials or workmanship (but cover shall include any other parts which are lost or damaged as a direct result of this defective condition and not as described in sub-paragraph (ii) below),

ii) a part of the Works which is lost or damaged in order to reinstate any other part of the Works if this other part is in a defective condition due to a defect in its design, materials or workmanship,

iii) a part of the Works which has been taken over by the Procuring Entity, except to the extent that the Contractor is liable for the loss or damage, and

iv) Goods while they are not in the Country, subject to Sub-Clause 14.5 [Plant and Materials intended for the Works].

18.2.5 If, more than one year after the Base Date, the cover described in sub-paragraph (d) above ceases to be available at commercially reasonable terms, the Contractor shall (as insuring Party) give notice to the Procuring Entity, with supporting particulars. The Procuring Entity shall then (i) be entitled subject to Sub-Clause 2.5 [Procuring Entity's Claims] to payment of an amount equivalent to such commercially reasonable terms as the Contractor should have expected to have paid for such cover, and (ii) be deemed, unless he obtains the cover at commercially reasonable terms, to have approved the omission under Sub-Clause 18.1 [General Requirements for Insurances].

18.3 Insurance against Injury to Persons and Damage to Property

18.3.1 The insuring Party shall insure against each Party's liability for any loss, damage, death or bodily injury which may occur to any physical property (except things insured under Sub-Clause 18.2 [Insurance for Works and Contractor's Equipment]) or to any person (except persons insured under Sub-Clause 18.4 [Insurance for Contractor's Personnel]), which may arise out of the Contractor's performance of the Contract and occurring before the issue of the Performance Certificate.

18.3.2 This insurance shall be for a limit per occurrence of not less than the amount stated in the **SCC**, with no limit on the number of occurrences. If an amount is not stated in the **SCC**, this Sub-Clause shall not apply. Unless otherwise stated in the Particular Conditions, the insurances specified in this Sub-Clause:

a) Shall be effected and maintained by the Contractor as insuring Party,

b) Shall be in the joint names of the Parties,

c) Shall be extended to cover liability for all loss and damage to the Procuring Entity's property (except things insured under Sub-Clause 18.2) arising out of the Contractor's performance of the Contract, and

d) May however exclude liability to the extent that it arises from:

i) The Procuring Entity's right to have the Permanent Works executed on, over, under, in or through any land, and to occupy this land for the Permanent Works,

ii) damage which is an unavoidable result of the Contractor's obligations to execute the Works and remedy any defects, and

iii) a cause listed in Sub-Clause 17.3 [Procuring Entity's Risks], except to the extent that cover is available at commercially reasonable terms.

18.4 Insurance for Contractor's Personnel

18.4.1 The Contract or shall effect and maintain insurance against liability for claims, damages, losses and expenses (including legal fees and expenses) arising from injury, sickness, disease or death of any person employed by the Contractor or any other of the Contractor's Personnel.

18.4.2 The insurance shall cover the Procuring Entity and the Engineer against liability for claims, damages, losses and expenses (including legal fees and expenses) arising from injury, sickness, disease or death of any person employed by the Contractor or any other of the Contractor's Personnel, except that this insurance may exclude losses and claims to the extent that they arise from any act or neglect of the Procuring Entity or of the Procuring Entity's Personnel.

18.4.3 The insurance shall be maintained in full force and effect during the whole time that these personnel are assisting in the execution of the Works. For a Subcontractor's employees, the insurance may be effected by the Subcontractor, but the Contractor shall be responsible for compliance with this Clause.

19. FORCE MAJEURE

19.1 Definition of Force Majeure

In this Clause, "Force Majeure" means an exceptional event or circumstance:

a) Which is beyond a Party's control,
b) Which such Party could not reasonably have provided against before entering into the Contract,
c) which, having arisen, such Party could not reasonably have avoided or overcome, and
d) which is not substantially attributable to the other Party.

Force Majeure may include, but is not limited to, exceptional events or circumstances of the kind listed below, so long as conditions (a) to (d) above are satisfied:

i) war, hostilities (whether war be declared or not), invasion, act of foreign enemies,
ii) rebellion, terrorism, sabotage by persons other than the Contractor's Personnel, revolution, insurrection, military or usurped power, or civil war,
iii) riot, commotion, disorder, strike or lock out by persons other than the Contractor's Personnel,
iv) munitions of war, explosive materials, ionizing radiation or contamination by radio-activity, except as may be attributable to the Contractor's use of such munitions, explosives, radiation or radio-activity, and
v) natural catastrophes such as earthquake, hurricane, typhoon or volcanic activity.

19.2 Notice of Force Majeure

19.2.1 If a Party is or will be prevented from performing its substantial obligations under the Contract by Force Majeure, then it shall give notice to the other Party of the event or circumstances constituting the Force Majeure and shall specify the obligations, the performance of which is or will be prevented. The notice shall be given within 14 days after the Party became aware, or should have become aware, of the relevant event or circumstance constituting Force Majeure.

19.2.2 The Party shall, having given notice, be excused performance of its obligations for so long as such Force Majeure prevents it from performing them.

Notwithstanding any other provision of this Clause, Force Majeure shall not apply to obligations of either Party to make payments to the other Party under the Contract.

19.3 Duty to Minimize Delay

Each Party shall at all times use all reasonable endeavors to minimize any delay in the performance of the Contract as a result of Force Majeure. A Party shall give notice to the other Party when it ceases to be affected by the ForceMajeure.

19.4 Consequences of Force Majeure

19.4.1 If the Contractor is prevented from performing his substantial obligations under the Contract by Force Majeure of which notice has been given under Sub-Clause 19.2 [Notice of Force Majeure], and suffers delay and/or incurs Cost by reason of such Force Majeure, the Contractor shall be entitled subject to Sub-Clause 20.1 [Contractor's Claims] to:

a) an extension of time for any such delay, if completion is or will be delayed, under Sub-Clause 8.4 [Extension of Time for Completion], and

b) if the event or circumstance is of the kind described in sub-paragraphs (i) to (iv) of Sub-Clause 19.1 [Definition of Force Majeure] and, in sub-paragraphs (ii) to (iv), occurs in the Country, payment of any such Cost, including the costs of rectifying or replacing the Works and/or Goods damaged or destroyed by Force Majeure, to the extent they are not indemnified through the insurance policy referred to in Sub-Clause 18.2 [Insurance for Works and Contractor's Equipment].

19.4.2 After receiving this notice, the Engineer shall proceed in accordance with Sub-Clause 3.5 [Determinations] to agree or determine these matters.

19.5 Force Majeure Affecting Subcontractor

If any Subcontractor is entitled under any contract or agreement relating to the Works to relief from force majeure on terms additional to or broader than those specified in this Clause, such additional or broader force majeure events or circumstances shall not excuse the Contractor's non-performance or entitle him to relief under this Clause.

19.6 Optional Termination, Payment and Release

If the execution of substantially all the Works in progress is prevented for a continuous period of 84 days by reason of Force Majeure of which notice has been given under Sub-Clause 19.2 [Notice of Force Majeure], or for multiple periods which total more than 140 days due to the same notified Force Majeure, then either Party may give to the other Party a notice of termination of the Contract. In this event, the termination shall take effect 7 days after the notice is given, and the Contractor shall proceed in accordance with Sub-Clause 16.3 [Cessation of Work and Removal of Contractor's Equipment].

Upon such termination, the Engineer shall determine the value of the work done and issue a Payment Certificate which shall include:

a) The amounts payable for any work carried out for which a price is stated in the Contract;

b) The Cost of Plant and Materials ordered for the Works which have been delivered to the Contractor, or of which the Contractor is liable to accept delivery: this Plant and Materials shall become the property of (and be at the risk of) the Procuring Entity when paid for by the Procuring Entity, and the Contractor shall place the same at the Procuring Entity's disposal;

c) other Cost or liabilities which in the circumstances were reasonably and necessarily incurred by the Contractor in the expectation of completing the Works;

d) the Cost of removal of Temporary Works and Contractor's Equipment from the Site and there turn of these items to the Contractor's works in his country (or toanyotherdestinationatnogreatercost);and

e) the Cost of repatriation of the Contractor's staff and labor employed wholly in connection with the Works at the date of termination.

19.7 Release from Performance

Notwithstanding any other provision of this Clause, if any event or circumstance outside the control of the Parties (including, but not limited to, Force Majeure) arises which makes it impossible or unlawful for either or both Parties to fulfil its or their contractual obligations or which, under the law governing the Contract, entitles the Parties to be released from further performance of the Contract, then upon notice by either Party to the other Party of such event or circumstance:

a) The Parties shall be discharged from further performance, without prejudice to the rights of either Party in respect of any previous breach of the Contract, and

b) The sum payable by the Procuring Entity to the Contractor shall be the same as would have been payable under Sub-Clause 19.6 [Optional Termination, Payment and Release] if the Contract had been terminated under Sub-Clause 19.6.

20. CLAIMS, DISPUTES AND ARBITRATION

20.1 Contractor's Claims

20.1.1 If the Contractor considers itself to be entitled to any extension of the Time for Completion and/or any additional payment, under any Clause of these Conditions or otherwise in connection with the Contract, the Contractor shall give Notice to the Engineer, describing the event or circumstance giving rise to the claim. The notice shall be given as soon as practicable, and not later than 30 days after the Contractor became aware, or should have become aware, of the event or circumstance.

20.1.2 If the Contractor fails to give notice of a claim within such period of 30days, the Time for Completion shall not be extended, the Contractor shall not be entitled to additional payment, and the Procuring Entity shall be discharged from all liability in connection with the claim. Otherwise, the following provisions of this Sub- Clauseshallapply.

20.1.3 The Contractor shall also submit any other notices which are required by the Contract, and supporting particulars for the claim, all as relevant to such event or circumstance.

20.1.3 The Contractor shall keep such contemporary records as may be necessary to substantiate any claim, either on the Site or at another location acceptable to the Engineer. Without admitting the Procuring Entity's liability, the Engineer may, after receiving any notice under this Sub-Clause, monitor the record-keeping and/or instruct the Contractor to keep further contemporary records. The Contractor shall permit the Engineer to inspect all these records, and shall (if instructed) submit copies to the Engineer.

20.1.4 Within 42 days after the Contractor became aware (or should have become aware) of the eventor circumstance giving rise to the claim, or within such other period as may be proposed by the Contractor and approved by the Engineer, the Contractor shall send to the Engineer a fully detailed claim which includes full supporting particulars of the basis of the claim and of the extension of time and/or additional payment claimed. If the event or circumstance giving rise to the claim has a continuing effect:

a) This fully detailed claim shall be considered as interim;
b) The Contractor shall send further interim claims at monthly intervals, giving the accumulated delay and/or amount claimed, and such further particulars as the Engineer may reasonably require; and
c) The Contractor shall send a final claim within 30 days after the end of the effects resulting from the event or circumstance, or within such other period as may be proposed by the Contractor and approved by the Engineer.

20.1.5 Within 42 days after receiving a Notice of a claim or any further particulars supporting a previous claim, or within such other period as may be proposed by the Engineer and approved by the Contractor, the Engineer shall respond with approval, or with disapproval and detailed comments. He may also request any necessary further particulars, but shall nevertheless give his response on the principles of the claim within the above defined time period.

20.1.6 Within the above defined period of 42 days, the Engineer shall proceed in accordance with Sub-Clause 3.5 [Determinations] to agree or determine (i) the extension (if any) of theTime for Completion (before or after its expiry) in accordance with Sub-Clause 8.4 [Extension of Time for Completion], and/or (ii) the additional payment (if any) to which the Contractor is entitled under the Contract.

20.1.7 Each Payment Certificate shall include such additional payment for any claim as has been reasonably substantiated as due under the relevant provision of the Contract. Unless and until the particulars supplied are sufficient to substantiate the whole of the claim, the Contractor shall only be entitled to payment for such part of the claim as he has been able to substantiate.

20.1.8 If the Engineer does not respond within the time frame defined in this Clause, either Party may consider that the claim is rejected by the Engineer and any of the Parties may refer to Arbitration in accordance with Sub-Clause 20.4 [Arbitration].

20.1.9 The requirements of this Sub-Clause are in addition to those of any other Sub-Clause which may apply toa claim. If the Contractor fails to comply with this or another Sub-Clause in relation to any claim, any extension of time and/or additional payment shall take account of the extent (if any) to which the failure has prevented or prejudiced proper investigation of the claim, unless the claim is excluded under the second paragraph of Sub- Clause 20.3 (f).

20.2 Amicable Settlement

Where a notice of a claim has been given, both Parties shall attempt to settle the dispute amicably before the commencement of arbitration. However, unless both Parties agree otherwise, the Party giving a notice of a claim in accordance with Sub-Clause 20.1 above should move to commence arbitration after the fifty-sixth day from the day on which a notice of a claim was given, even if no attempt at an amicable settlement has been made.

20.3 Matters that may be referred to arbitration

Notwithstanding anything stated herein the following matters may be referred to arbitration before the practical completion of the Works or abandonment of the Works or termination of the Contract by either party:

a) The appointment of a replacement Engineer upon the said person ceasing to act.
b) Whether or not the issue of an instruction by the Engineer is empowered by these Conditions.
c) Whether or not a certificate has been improperly withheld or is not in accordance with these Conditions.
e) Any dispute arising in respect of war risks or war damage.
f) All other ma tters shall only be referred to arbitration after the completion or alleged completion of the Works or termination or alleged termination of the Contract, unless the Procuring Entity and the Contract or agree otherwise in writing.

20.4 Arbitration

20.4.1 Any claim or dispute between the Parties arising out of or in connection with the Contract not settled amicably in accordance with Sub-Clause 20.3 shall be finally settled by arbitration.

20.4.2 No arbitration proceedings shall be commenced on any claim or dispute where notice of a claim or dispute has not been given by the applying party within ninety days of the occurrence or discovery of the matter or issue giving rise to the dispute.

20.4.3 Notwithstanding the issue of a notice as stated above, the arbitration of such a claim or dispute shall not commence unless an attempt has in the first instance been made by the parties to settle such claim or dispute amicably with or without the assistance of third parties. Proof of such attempt shall be required.

20.4.4 The Arbitrator shall, without prejudice to the generality of his powers, have powers to direct such measurements, computations, tests or valuations as may in his opinion be desirable in order to determine the rights of the parties and assess and award any sums which ought to have been the subject of or included in any certificate.

20.4.5 The Arbitrator shall, without prejudice to the generality of his powers, have powers to open up, review and revise any certificate, opinion, decision, requirement or notice and to determine all matters in dispute which shall be submitted to him in the same manner as if no such certificate, opinion, decision requirement or notice had been given.

20.4.6 The arbitrators shall have full power to open up, review and revise any certificate, determination, instruction, opinion or valuation of the Engineer, relevant to the dispute. Nothing shall disqualify representatives of the Parties and the Engineer from being called as a witness and giving evidence before the arbitrators on any matter whatsoever relevant to the dispute.

20.4.7 Neither Party shall be limited in the proceedings before the arbitrators to the evidence, or to the reasons for dissatisfaction given in its Notice of Dissatisfaction.

20.4.7 Arbitration may be commenced prior to or after completion of the Works. The obligations of the Parties, and the Engineer shall not be altered by reason of any arbitration being conducted during the progress of the Works.

20.4.8 The terms of the remuneration of each or all the members of Arbitration shall be mutually agreed upon by the Parties when agreeing the terms of appointment. Each Party shall be responsible for paying one-half ofthis remuneration.

20.5 Arbitration with National Contractors

20.5.1 If the Contract is with national contractors, arbitration proceedings will be conducted in accordance with the Arbitration Laws of Kenya. In case of any claim or dispute, such claim or dispute shall be notified in writing by either party to the other with a request to submit it to arbitration and to concur in the appointment of an Arbitrator within thirty days of the notice. The dispute shall be referred to the arbitration and final decision of a person to be agreed between the parties. Failing agreement to concur in the appointment of an Arbitrator, the Arbitrator shall be appointed, on the request of the applying party, by the Chairman or Vice Chairman of any of the following professional institutions;

i) Architectural Association of Kenya
ii) Institute of Quantity Surveyors of Kenya
iii) Association of Consulting Engineers of Kenya
iv) Chartered Institute of Arbitrators (Kenya Branch)
v) Institution of Engineers of Kenya

20.5.2 The institution written to first by the aggrieved party shall take precedence over all other institutions.

20.6 Arbitration with Foreign Contractors

20.7.1 Arbitration with foreign contractors shall be conducted in accordance with the arbitration rules of theUnited Nations Commission on International Trade Law (UNCITRAL); or with proceedings administered by the International Chamber of Commerce (ICC) and conducted under the ICC Rules of Arbitration; by one or more arbitrators appointed in accordance with said arbitration rules.

20.7.2 The place of arbitration shall be a location specified in the **SCC;** and the arbitration shall be conducted in the language for communications defined in Sub-Clause 1.4 [Law and Language].

20.7 Alternative Arbitration Proceedings

Alternatively, the Parties may refer the matter to the Nairobi Centre for International Arbitration (NCIA) which offers a neutral venue for the conduct of national and international arbitration with commitment to providing institutional support to the arbitral process.

20.8 Failure to Comply with Arbitrator's Decision

20.8.1 The award of such Arbitrator shall be final and binding upon the parties.

20.8.2 In the event that a Party fails to comply with a final and binding Arbitrator's decision, then the other Party may, without prejudice to any other rights it may have, refer the matter to a competent court of law.

10.7 Contract operations continue

Notwithstanding any reference to arbitration herein,

a) The parties shall continue to perform their respective obligations under the Contract unless they otherwise agree; and
b) The Procuring Entity shall pay the Contractor any monies due the Contractor.

SECTION IX - SPECIAL CONDITIONS OF CONTRACT

The following Particular Conditions shall supplement the GCC. Whenever there is a conflict, the provisions herein shall prevail over those in the GCC.

Condition	**GCC clause**	**Data**
Procuring entitys name and address	1	Kenya Rural Roads Authority, P.O. Box 1391– 70100, **Garissa, Kenya.**
Time for compleion	1.1.4	**The Time for Completion are the following:** **A. Construction: 12 Months** **B. Maintenance and Rectification during Defects Liability Period: 6 Months.** **C. Routine Maintenance: 6 Months**
Engineer's name and address	1	**Regional Director (RAM),** **Kenya Rural Roads Authority,** **Garissa Region** **P.O. Box 1391-70100.** **Garissa, Kenya.**
Electronic transmission	1.3	Not allowed
Time for the parties entering into a contract agreement	1.6	Within **21 days** from the date of Letter of Award
Time for access to the site	2.1.1	Possession of Site within Fourteen (**14 days)** from the date the Contract Agreement is signed Add Paragragh 2 as follows: ***"The Engineer SHALL issue to the Contractor an Order to Commence Works within 28 Days"***
	2.4.1	Delete entire paragraph and insert the following: ***"The Employer to make necessary arrangements to pay the Contractor in a timely manner"***
Engineers' authority to make variation	3.1.2(b)(ii)	Variation would included increase the accepted contract amount by not exceeding…25…% of the contract price
	3.1.2	Amend the second 3.1.2 to 3.1.3 and 3.1.3 to be 3.1.4
	3.4.1	Delete the entire paragraph and replace with: The Employer **may** at any time during the performance of the Contract replace the Engineer
	4.1.1	Delete ***'….design to the extent specified in the Contract……"***
Perfomamce security	4.2.2	**Delete and replace with:** **"The Contractor shall provide security in, <u>respect of the value of the 5% bid sum 1 of the tender,</u> for his proper performance of the Contract within 28 days after receipt of the Letter of Acceptance. The Performance Security shall be in the form of a bank guarantee, as stipulated by the Employer in the Appendix to Bid. The performance security shall be denominated in the types and proportions of currencies in which the contract price is payable. The Contractor shall notify the Engineer when providing the Performance Security to the Employer".**

		The security Shall be 5% of Bid Sum 1 **At the start of the performance-based contract and before release of the performance guarantee for upgrading works, The Contractor shall provide security in, in respect of the value of the BID SUM 2 for performance-based maintenance works for his proper performance of the Contract within 28 days after the date of issue of the Substantial Completion Certificate. The Performance Security shall be in the form of a bank guarantee, as stipulated by the Employer in the Appendix to Bid. The performance security shall be denominated in the types and proportions of currencies in which the contract price is payable. The Contractor shall notify the Engineer when providing the Performance Security to the Employer". The security SHALL be 5% of Bid Sum 2** **"If the performance security is a bank guarantee, it shall be issued either (a) by a bank located in the country of the Employer or a foreign bank through a correspondent bank located in the country of the Employer, or (b) directly by the foreign bank that has been determined in advance to be acceptable to the Employer.** **"Without limitation to the provisions of the preceding paragraph, whenever the Engineer determines an addition to the Contract Price as a result of a change in cost, the Contractor, at the Engineers written request, shall promptly increase the value of the Performance Security by an equal percentage".**
	4.2.3	**Replace 14 days with 21 Days**
Contractors' representatives name	4.3	Delete entire Paragraph 1 to read: The Contractor SHALL prior to the commencement date submit to the Engineer for consent name and particulars of the person the contractor proposes to appoint as the Contractors representative If consent is withheld or subsequently revoked interms of Sub-Clause 6.9 [Contractor's Personnel], or if the appointed person fails to act as Contractor's Representative, the Contractor shall similarly submit the name and particulars of another suitable person for such appointment.
	4.4.1	Delete and replace with: *'The contractor may subcontract part or all of the works subject to the approval of the employer"*
	4.21.1	Delete as follows: ***……" by the Contractor ……." Replace with ……"by the Engineer….."***
Working hours	6.5	The normal working hours are 8am to 5pm with 1hour lunch break for Monday to Friday and 8am to 1pm for Saturdays The Contractor shall allow in his programme for the following public holidays per calendar year during which the Contractor shall not be permitted to work. • **New Years Day (1st January)** • **Good Friday** • **Easter Monday** • **Labour day (1st May)**

		• **Madaraka Day (1st June)** • **Idd Ul Fitr** • **Mashujaa Day (20th October)** • **Jamhuri day (12th December)** • **Christmas Day (25th December)** • **Boxing day (26th December)** The Contractor shall also allow per calendar year for a further two unspecified public holidays which may be announced by the Government of Kenya with no prior notification upon which he shall not be permitted to work.
	6.7.3	Amend the second 6.7.3 to read 6.7.4
Key personnel name	6.9	Key Personnel A. The key staff listed below must have minimum experience and qualifications as set out in Section III of the tender Document B. Key Personnel defined as the Contractor's personnel are: **Site Agent, Deputy Site Agent, Site Engineer, Senior Foreman, Site Surveyor and Foremen.**
Disorderley Conduct	6.11	The Engineer may require the contractor to remove from the works any person provided by the contractor who in the opinion of the Engineer misconducts himself or is incompetent or negligent in proper performance of his duties or whose presence on site is considered bty the Engineer to be undesirable and such person shall not be again allowed upon the Works without the Consent of the Engineer. Any person removed from the Works shall be replaced as soon as possible be at liberty
Prohibition of Harmful Child Labor	6.21	Delete entire paragraph and replace with: "the employer shall not children any time during execution of the contract"
	7.3.1	Replace the Procuring Entiy's Personnel…… with the Enineer's Personnel
21 Ownership of Plant and Materials	7.7	Delete as follows: ***"Except as otherwise provided in the Contract, each item of Plant and Materials……..."*** Replace with ***"all materials for Works……"***
Commencement of work	8.1.1	Delete Items (b) and (d)
Defects notification period	13.5.1.(b) (iii)	365 days
Taking Over of the Works and Sections	10.1	The minimum length for Taking Over shall be as described in Section 107 of the Special Specifications
	10.1.1	Delete entire paragraph
	10.1.3	Delete entire paragraph
	10.2	*Delete 10.2.1(b) and replace with the following:* *Where the Taking Over Certificate has been issued in parts Pursuant to Section 10.2, The Contractor Shall be liable for maintenance works of the taken over section until issuance of the Defects Liability* *Any costs arising from thus liability shall be deemed to have been covered in their rates for construction.* *(for avoidance of doubt, PBRM phase shall commence for the entire road after issuance of DLP*

		certificvate which is only issued after takinf over the last section of the road)
	10.2.1	Add after ……. *"Procuring entity*……add *"…..and the recommendations of the Inspection and Acceptance Committee duly appointed by the Employer….."*
	12.3.2	Delete (a), (b) (i)
Engineers' duties and authority	3.1(b)(ii)	Variations resulting in an increase of theAccepted Contract Amount in excess of % shall require approval of the Procuring Entity.
Adjustments for changes in cost	13.8.3	Period"n"applicable to the adjustment multiplier "Pn":__*[Insert the period if different from one (1) month' if period " n" is one (1) month, insert "notapplicable"}*
Sustainable procurement	14.1	
Performance security	4.2	The performance security will be in the form of a *"demand bank guarantee"* in the amount(s) of _____ _,_ *insert related jigure(s)}* percent of the Accepted Contract Amount in the same currency(ies) of the ContractAmount.
Normal working hours	4.2	…… Hours per day
Delay damages for the works	8.7 &14.15(b)	Kshs. 100,000.00 per day upto 5% of Bid Sum 1
Maxmum amount of delay damages		
Provisional sums	13.5. (b)(ii)	*NONE*
	13.8.4	*Add as follows:* *The basic applicable indicies shall be the prevailing indices available 28days prior to bid submission* *The weightings for the indicies shall as given in* ***TABLE A***
Total advance payment	14.2.1 I	10% of BID sum 1 in the form of Unconditional Bank Guarantee add the following- The Contractor is to use the advance payment only to pay for Equipment, Plant, Materials, and mobilization expenses required specifically for the execution of the Contract. The Contractor shall demonstrate that advance payment has been used in this way by supplying copies of invoices or other documents to the Engineer. any portion of the Advance Guarantee not expensed in accordance with the conditions of this clause SHALL be recalled by the Employer immediately"
Repayment amortization rate of advance payment	14.2.4	Change 30% to 20% and accepted contract amount ot Bid Sum 1 Delete the Provisions of (b) and replace with The reimbursement of the lump sum advance payment shall be made by deductions from the interim payments and where applicable from the balance owing to the contractor. Reimbursement shall begin when the amount

		of the sums due under the Contract reaches or exceeds 20% of the original amount of the contract. It shall have been completed by the time 80% of this amount is reached. The amount to be repaid by way of successive deductions shall be calculated by the means of the formula: $RI = \frac{A(x-X)}{80-20}$ Where: RI = the amount to be reimbursed. A = the amount of the advance which has been granted. x = the amount of proposed cumulative payments as a percentage of the original amount of the contract. This figure will exceed 20% but not 80%. X = the amount of the previous cumulative payments as a percentage of the original amount of the Contract. This figure will be below 80% but not less than 20%. With respect to the first recovery of Advance, it should be noted that where x reaches or exceeds 20%, then X will automatically have taken on the value of 20%. With each reimbursement the guarantee may be reduced accordingly.
	14.2.6	The Employer may, upon request by the Contractor make an interest free advance payment to the Contractor in respect of the works, in a lumpsum of 10% of the Contract Sum as described in the Appendix to Form of Bid. Payment of such advance amount will be due under a separate certification by the Engineer: 1 Purusant to Section 148 of the Public Procurement and Disposal Act 2015 (PPDA) 2015 of the Republic of Kenya, the Contractor has confirmed in writing that the Advance Payment shall only be used for purposes of securing plant, materials, or equipment for the purposes of the Contract. This confirmation shall be in form of a schedule of activities, deliverables and payments to be made, all in relations to the Contract. 2. Provision by the Contractor of the Performance Security (Unconditional Bank Guaranttee) in accordance with Clause 10 of the Conditions of Contract, and; 3. Provision by the Contractor of a Bank Guarantee (Unconditional Bank Guaranttee) for the full amount of

		the Advance Payment which shall remain effective until the Advance Payment has been completely repaid by the Contractor out of current earnings under the Contract and certified accordingly by the Engineerl. After payment of the Advance, the Contractor shall be required to provide proof of utilization of the money in compliance with (i) above within **180 days** of the said payment. Should it be established that the Advance payment has been used contrary to paragraph (i) above, or the Contractor has failed to provide evidence of utilization of the money in compliance with (i), the Advance Payment shall be recovered by recalling the Bank Guaranttee. A form of Bank Gurantee acceptable to the Employer is included in the tender document. The Advance Payment shall be used by the Contractor exclusively for necessary expenditures and execution of works. The Advance Payment shall not be subject to retention money. Partial payment or non-payment of such Advance will not attract interest charges, claim for extension of time or any other claims by the Contractor, nor shall it form any grounds for starting and progressing with the works as per the Contract. The reimbursement of the lumpsum Advance Payment shall be made by deductions from the interim payments and where applicable, from the balance owing to the Contractor. Reimbursement shall begin when the amount of the sums due under the Contract reaches or exceeds 20% of the original amount of the Contract. It shall have been completed by the time 80% of this amount is reached.
Percentage of retention	14.3	10% of Interim Payment Certificate
Limit of retention money	14.3	5% of Bid Sum1
	14.3.2	Delete a) and insert as follows: Payment shall be by milestone as shown in **Table B.**
	14.3.2	Delete the provisions of (e) and replace as follows: designated materials as listed below: i. Bitumen and Bituminous products (with exclusion of fuels, oils and lubricants) ii. Reinforcement and structural steel iii. Cement iv. Lime v. Chippings vi. Aggregates vii Flex beam Guard rails the materials on site shall not exceeding 75 percent of the value)
	14.3.2	add (h) any amount arising from variation of prices (VOPs) calculated from prevailing indicies
	14.4.1	Delete entire paragragh
	14.4.2	Amend quarterly to monthly

	14.6.1	Delete entirely
Minimum Amount of Interim Payment Certificates	14.6.2	milestone achieved delete entirely.
	14.7.1	Delete (a)
Publishing source of commercial interest rates for financial charges in case of delayed payment	14.8	Delete and replace with: In the event of the failure of the Employer to make payment within the times stated, the Employer shall make payment to the Contractor of simple interest at a rate equal to two percentage points above the average bank lending rates obtained from Central Bank of Kenya.
Maximum total liability of the Contractor to the Procuring Entity	17.6	
Periods for submission of insurance:	18.1	*21 days*
a. evidence of insurance.		21days
b. relevant policies		**21** days
Maximum number of deductibles for insurance of the Procuring Entity's risks	18.2.4(d)	
Minimum amount of third party insurance	18.3	KShs. 3,000,000 (Kshs. Three million)
	20.1.3	Amend the first 20.1.3 to read 20.1.3 A and the second "20.1.3" to read 20.1.3B
	20.4.7	Amend the first 20.4.7 to read 20.4.7 A and the second "20.4.7" to read 20.4.7B
	20.4	**Appointer of Arbitrator** Chartered Institute of Arbitrators of Kenya
The place of arbitration	20.7.2	The place of arbitration shall be The Chartered Institute of Arbitrators (Kenya)----------

Table A

Description of Index	*Sources ofIndices*	*% Range of Weighting*	*Base indices -28 days prior to the date ofBid*
Fixed ("A")	KNBS	50	50
Labour	KNBS	5 – 10	
Fuels	KNBS	10 – 15	
Oils and lubricants	KNBS	1-5	
Cement	KNBS	4-10	
Reinforcement and Steel	KNBS	1 – 3	
Explosives	KNBS	0.1 –0. 5	
Bitumen and Bituminous	KNBS	20 - 25	
Total			100

Table B

Q/No.	**Milestone**	**Payment Date**	**Valuation**	**Recovery of advance**

1.	On attainment of 10% of project length to bitumen standard		Full measure of Milestone as measured	
2.	On attainment of 10% of project length to bitumen standard		Full measure of Milestone as measured	Start recovery as per clause 46.3
3.	On attainment of 10% of project length to bitumen standard		Full measure of Milestone as measured	
4.	On attainment of 10% of project length to bitumen standard		Full measure of Milestone as measured	
5.	On attainment of 10% of project length to bitumen standard		Full measure of Milestone as measured	
6.	On attainment of 10% of project length to bitumen standard		Full measure of Milestone as measured	
7.	On attainment of 10% of project length to bitumen standard		Full measure of Milestone as measured	
8.	On attainment of 10% of project length to bitumen standard		Full measure of Milestone as measured	End of recovery as per clause 46.3
9.	On attainment of 10% of project length to bitumen standard		Full measure of Milestone as measured	
10.	On attainment of 10% of project length to bitumen standard		Full measure of Milestone as measured	
11.	On attainment of 10% of project length to bitumen standard		Value of measured	
12.	On attainment of 10% of project length to bitumen standard		Value of measured works, claims, interests etc..	

A milestone shall be a fully completed section of the road as above having all pavement layers, access culverts, cross pipe culverts and functioning drains.

For assigned or formally sub-contracted works, a milestone shall constitute 10% of the total length assigned or formally sub-contracted, having all pavement layers, access culverts, cross pipe culverts and functioning drains.

1. Consequent to item (2) above, a milestone shall constitute 10% of the total length of the project road remaining with the main Contractor after assignment or formal sub-contracting of portions of the road having all pavement layers, access culverts, cross pipe culverts and functioning drains.
2. Completion of bottleneck section on the project road to pavement standard as instructed and approved by the Engineer shall constitute a milestone.

5. Work executed under Major structures (box culverts and bridges will be valued and paid together with due milestone payments

6. Road Furniture and road marking will form part of the completed mile stone

…….	…….	……

(Title) Bidder Official Stamp	(Signature)	(Date)

SECTION X - CONTRACT FORMS

Table of Forms

FORM No. 1 - NOTIFICATION OF INTENTION TO AWARD

FORM No. 2 - NOTIFICATION OF AWARD - LETTER OF ACCEPTANCE

FORM No. 3 - CONTRACT AGREEMENT

FORM No. 4 - PERFORMANCE SECURITY [Option 1 - Unconditional Demand Bank Guarantee]

FORM No. 5 - PERFORMANCE SECURITY [Option 2 - Performance Bond]

FORM No. 6 - ADVANCE PAYMENT SECURITY

FORM No. 7 - RETENTION MONEY SECURITY

FORM No. I - Notification of Intention to Award [*This Notification of Intention to Award shall be sent to each Tenderer that submitted a Tender.*] [*Send this Notification to the Tenderer's Authorized Representative named in the Tender Information Form*]

FORMAT

For the attention of Tenderer's Authorized Representative

Name……..…….... ***[INSERT AUTHORIZED REPRESENTATIVE'S NAME] ADDRESS: [INSERT AUTHORIZED REPRESENTATIVE'S ADDRESS]***

Telephones: ***[INSERT AUTHORIZED REPRESENTATIVE'S TELEPHONE/FAX NUMBERS]***

EMAIL ADDRESS: ***[INSERT AUTHORIZED REPRESENTATIVE'S EMAIL ADDRESS]***

*[**IMPORTANT:** INSERT THE DATE THAT THIS NOTIFICATION IS TRANSMITTED TO TENDERERS. THE NOTIFICATION MUST BE SENT TO ALL TENDERERS SIMULTANEOUSLY. THIS MEANS ON THE SAME DATE AND AS CLOSE TO THE SAME TIME AS POSSIBLE.]*

Date of Transmission: This Notification is sent by: ***[EMAIL]*****……**
on……..... ***[DATE]*****…….*****(local time)***

ProcuringEntity: ***[INSERT THE NAME OF THE PROCURING ENTITY]*** Contract title: ***[INSERT THE NAME OF THE CONTRACT]***

Country: Kenya, County_____***(if the Procuring Entity is from a County)***

This Notification of Intention to Award (Notification) notifies you of our decision to award the above contract. The transmission of this Notification begins the Standstill Period. During the Standstill Period, you may:

a) Request a debriefing in relation the evaluation of your Tender, and/or

b) Submit a Procurement-related Complaint in relation to the decision to award the contract.

1. The successful Tenderer

Name: ***[INSERT NAME OF SUCCESSFUL TENDERER]*** Address: ***[INSERT ADDRESS OF THE SUCCESSFUL TENDERER]*** Contract price: ***[INSERT CONTRACT PRICE OF THE SUCCESSFUL TENDER]***

2. Other Tenderers: ***INSERT NAMES OF ALL TENDERERS THAT SUBMITTED A TENDER. IF THE TENDER'S PRICE WAS EVALUATED INCLUDE THE EVALUATED PRICE AS WELL AS THE TENDER PRICE AS READ OUT.]***

	Name of Tenderer	Tender price	Evaluated Tender price	*Comments (if any)*
1				
2				
3				
4				
Etc.				

1. How to request a debriefing

DEADLINE: The deadline to request a debriefing expires at midnight on ***[INSERT DATE]*** (local time).

You may request a debriefing in relation to the results of the evaluation of your Tender. If you decide to request a debriefing your written request must be made within three (3) Business Days of receipt of this Notification of Intention to Award. Provide the contract name, reference number, name of the Tenderer, contact details; and address the request for debriefing as follows:

Attention: ***[INSERT FULL NAME OF PERSON, IF APPLICABLE]*** **Title/position**: ***[INSERT TITLE/POSITION]*** **Procuring Entity**: ***[INSERT NAME OF PROCURING ENTITY]*** **Email address**: ***[INSERT EMAIL ADDRESS]***

If your request for a debriefing is received within the 3 Business Days deadline, we will provide the debriefing within five (5) Business Days of receipt of your request. If we are unable to provide the debriefing within this period, the Standstill Period shall be extended by five (5) Business Days after the date that the debriefing is provided. If this happens, we will notify you and confirm the date that the extended Standstill Period will end. The debriefing may be in writing, by phone, video conference call or in person. We shall promptly advise you in writing how the debriefing will take place and confirm the date and time.

If the deadline to request a debriefing has expired, you may still request a debriefing. In this case, we will provide the debriefing as soon as practicable, and normally no later than fifteen (15) Business Days from the date of publication of the Contract Award Notice.

2. How to make a complaint?

Period: Procurement-related Complaint challenging the decision to award shall be submitted by midnight, ***[INSERT DATE]*** (local time).

Provide the contract name, reference number, name of the Tenderer, contact details; and address the Procurement-related Complaint as follows:

Attention: ***[INSERT FULL NAME OF PERSON, IF APPLICABLE]*** Title/position: ***[INSERT TITLE/POSITION]*** Procuring Entity: ***[INSERT NAME OF PROCURING ENTITY]*** Email address: ***[INSERT EMAIL ADDRESS]***

At this point in the procurement process, you may submit a Procurement-related Complaint challenging the decision to award the contract. You do not need to have requested, or received, a debriefing before making this complaint. Your complaint must be submitted within the Standstill Period and received by us before the Standstill Period ends.

In summary, there are four essential requirements:

a) You must be an 'interested party'. In this case, that means a Tenderer who submitted a Tender in this tendering process, and is the recipient of a Notification of Intention to Award.

b) The complaint can only challenge the decision to award the contract.

c) You must submit the complaint within the period stated above.

d) You must include, in your complaint, all of the information necessary to support your case.

e) The application must be accompanied by the fees set out in the Procurement Regulations, which shall not be refundable (information available from the Public Procurement Authority at www.ppoa.go.ke.

3. Standstill Period

a) **DEADLINE:** The Standstill Period is due to end at midnight on [*insert date*] (local time).

i) The Standstill Period lasts ten (14) Days after the date of transmission of this Notification of Intention to Award.

(ii) The Standstill Period may be extended as stated in Section 4 above.

If you have any questions regarding this Notification please do not hesitate to contact

us. On behalf of the Procuring Entity:

Name_____

Title and Position_____

_____

Signature_____

Date_____

FORM NO. 2 - NOTIFICATION OF AWARD

Letter of Acceptance

[LETTER HEAD PAPER OF THE

PROCURING ENTITY] *[date]*

FORMAT

To: ***[NAME AND ADDRESS OF THE CONTRACTOR]***

This is to notify you that your Tender dated ***[DATE]*** for execution of the ***[NAME OF THE CONTRACT AND IDENTIfiCATION NUMBER, AS GIVEN IN THE SCC]*** for the Accepted Contract Amount ***[AMOUNT IN NUMBERS AND WORDS] [NAME OF CURRENCY],*** as corrected and modified in accordance with the Instructions to Tenderers, is hereby accepted by our Agency.

You are requested to furnish the Performance Security within 30 days in accordance with the Conditions of Contract, using, for that purpose, one of the Performance Security Forms included in Section X, Contract Forms, of the tender document.

We attach a copy of the Contact for your

Authorized Signature:

Name and Title of

Signatory: Name of

Agency:

Attachment: Contract Agreement

FORM NO. 3 – CONTRACT AGREEMENT:

THIS AGREEMENT made the ……day of ……. between **Regional Director** of **Kenya Rural Roads Authority, Garissa Region-P.O. Box 1391-Garissa, Kenya** (hereinafter "***the Procuring Entity"),*** of the one part,

and……of……

……(***hereinafter "the Contractor"),*** of the other part:

WHEREAS the Procuring Entity desires that the Works known as…… should be executed by the Contractor, and has accepted a Tender by the Contractor for the execution and completion of these Works and the remedying of any defects therein, The Procuring Entity and the Contractor agree as follows:

1. In this Agreement words and expressions shall have the same meanings as are respectively assigned to them in the Contract documents referred to.

2. The following documents shall be deemed to form and be read and construed as part of this Agreement. This Agreement shall prevail over all other Contract documents.

   a) The Letter of Acceptance,
   b) The Letter of Tender,
   c) The addenda Nos_____(if any)
   d) The Particular Conditions,
   e) The General Conditions,
   f) The Specification,
   g) The Drawings; and
   h) **The completed Schedules and any other documents forming part of the contract**.

3. In consideration of the payments to be made by the Procuring Entity to the Contractor as specified in this Agreement, the Contractor hereby covenants with the Procuring Entity to execute the Works and to remedy defects therein in conformity in all respects with the provisions of the Contract.

4. The Procuring Entity hereby covenants to pay the Contractor in consideration of the execution and completion of the Works and the remedying of defects therein, the Contract Price or such other sum as may become payable under the provisions of the Contract at the times and in the manner prescribed by the Contract.

   IN WITNESS whereof the parties hereto have caused this Agreement to be executed in accordance with the laws of Kenya on the day, month and year specified above.

Signed by…….

……. (for the Procuring Entity)

Signed by…….

…… (for the Contractor)

FORM NO. 4 - PERFORMANCE SECURITY – (Unconditional Demand Bank Guarantee)

[GUARANTOR LETTERHEAD OR SWIFT IDENTIFIER CODE]

Beneficiary: _____ ***[INSERT NAME AND ADDRESS OF PROCURING ENTITY]*** **Date:** _____ ***[INSERT DATE OF ISSUE]***

PERFORMANCE GUARANTEE No.: _____

Guarantor: ***[INSERT NAME AND ADDRESS OF PLACE OF ISSUE, UNLESS INDICATED IN THE LETTERHEAD]***

1. We have been informed that _____ (herein after called "the Applicant") has entered into Contract No. _____ *dated* _____ with the Beneficiary, for the execution of _____ (herein after called "the Contract").

2. Further more, we understand that, according to the conditions of the Contract, a performance guarantee is required.

3. At the request of the Applicant, we as Guarantor, here by irrevocably undertake to pay the Beneficiary any sum or sums not exceeding in total an amount of……[1] such sum being payable in the types and proportions of currencies in which the Contract Price is payable, upon receipt by us of the Beneficiary's complying demand supported by the Beneficiary's statement, whether in the demand itself or in a separate signed document accompanying or identifying the demand, stating that the Applicant is in breach of its obligation(s) under the Contract, without the Beneficiary needing to prove or to show grounds for your demand or the sum specified therein.

4. This guarantee shall expire, no later than the …..... Day of …..... 2…[2], and any demand for payment under it must be received by us at this office indicated above on or before that date.

5. The Guarantor agrees to a one-time extension of this guarantee for a period not to exceed *[six months] [one year]*, in response to the Beneficiary's written request for such extension, such request to be presented to the Guarantor before the expiry of the guarantee."

_____

_____

[NAME OF AUTHORIZED (OFFICIAL), SIGNATURE(S) AND SEALS/STAMPS]

Note: Allitalicized text (including footnotes) is for use in preparing this form and shall be deleted from the final product.

---

[1] *The Guarantor shall insert an amount representing the percentage of the Accepted Contract Amount specified in the Letter of Acceptance, less provisional sums, if any, and denominated either in the currency(cies) of the Contract or a freely convertible currency acceptable to the Beneficiary.*

[2] *Insert the date twenty-eight days after the expected completion date as described in GC Clause 11.9. The Procuring Entity should note that in the event of an extension of this date for completion of the Contract, the Procuring Entity would need to request an extension of this guarantee from the Guarantor. Such request must be in writing and must be made prior to the expiration date established in the guarantee. In preparing this guarantee, the Procuring Entity might consider adding the following text to the form, at the end of the pen ultimate paragraph: "The Guarantor agrees to a one-time extension of this guarantee for a period not to exceed [six months] [one year], in response to the Beneficiary's written request for such extension, such request to be presented to the Guarantor before the expiry of the guarantee."*

NOT APPLICABLE

FORM No. 5 - PERFORMANCE SECURITY OPTION 2– (Performance Bond)

*[**Note:** Procuring Entities are advised to use Performance Security–Unconditional Demand Bank Guarantee instead of Performance Bond due to difficulties involved in calling Bond holder to action]*

[Guarantor letterhead or SWIFT identifier code]

Beneficiary:_____*[insert name and Address of* Procuring

Entity*]* **Date:**_____*[Insert date of issue]* **PERFORMANCE**

BOND No.:_____

Guarantor: [*Insert name and address of place of issue, unless indicated in the letter head]*

1. By this Bond_____as Principal (hereinafter called "the Contractor") and_____] as Surety (hereinafter called "the Surety"), are held and firmly bound unto_____] as Obligee (hereinafter called "the Procuring Entity") in theamountof_____for the payment of which sum well and truly to be made in the types and proportions of currencies in which the Contract Price is payable, the Contractor and the Surety bind themselves, their heirs, executors, administrators, successors and assigns, jointly ands everally, firmly by these presents.

2 WHEREAS the Contractor has entered into a written Agreement with the Procuring Entity dated the day of, 20_____, for_____in accordance with the documents, plans, specifications, and amendments thereto, which to the extent here in provided for, are by reference made part hereof and are herein after referred to as the Contract.

3 NOW, THEREFORE, the Condition of this Obligation is such that, if the Contractor shall promptly and faithfully perform the said Contract (including any amendments thereto), then this obligation shall be null and void; otherwise, it shall remain in full force and effect. Whenever the Contractor shall be, and declared by the Procuring Entity to be, in default under the Contract, the Procuring Entity having performed the Procuring Entity's obligations there under, the Surety may promptly remedy the default, or shall promptly:

1) Complete the Contract in accordance with its terms and conditions; or

2) Obtain a tender or tenders from qualified tenderers for submission to the Procuring Entity for completing the Contract in accordance with its terms and conditions, and upon determination by the Procuring Entity and the Surety of the lowest responsive Tenderers, arrange for a Contract between such Tenderer, and Procuring Entity and make available as work progresses (even though there should be a default or a succession of defaults under the Contract or Contracts of completion arranged under this paragraph) sufficient funds to pay the cost of completion less the Balance of the Contract Price; but not exceeding, including other costs and damages for which the Surety may be liable hereunder, the amount set forth in the first paragraph hereof. The term "Balance of the Contract Price," as used in this paragraph, shall mean the total amount payable by Procuring Entity to Contractor under the Contract, less the amount properly paid by Procuring Entity to Contractor; or

3) Pay the Procuring Entity the amount required by Procuring Entity to complete the Contract in accordance with its terms and conditions upto a total not exceeding the amount of this Bond.

4 The Surety shall not be liable for a greater sum than the specified penalty of this Bond.

5 Any suit under this Bond must be instituted before the expiration of one year from the date of the issuing of the Taking-Over Certificate. No right of action shall accrue on this Bond to or for the use of any person or corporation other than the Procuring Entity named here in or the heirs, executors, administrators, successors, and assigns of the Procuring Entity.

6 In testimony where of, the Contractor has here unto set his hand and affixed his seal, and the Surety has caused these presents to be sealed with his corporate seal duly attested by the signature of his legal representative, this day
_____of_____20_____.

SIGNED ON_____on behalf of_____

By_____in the capacity of_____

In the presence of

SIGNED ON_____on behalf of_____

By_____in the capacity of_____

In the presence of

FORM NO. 6 - ADVANCE PAYMENT SECURITY

[Demand Bank Guarantee] ***[GUARANTOR LETTERHEAD OR SWIFT***

IDENTIfiER CODE] [GUARANTOR LETTERHEAD O RSWIFT

IDENTIFIER CODE]

Beneficiary:_____***[INSERT NAME AND ADDRESS OF***

PROCURING ENTITY*]* Date:_____***[INSERT DATE OF ISSUE]***

ADVANCE PAYMENT GUARANTEE No.: ***[INSERT GUARANTEE REFERENCE NUMBER]***

Guarantor: [*INSERT NAME AND ADDRESS OF PLACE OF ISSUE, UNLESS INDICATED IN THE LETTERHEAD]*

1. We have been informed that_____(herein after called "the Applicant") has entered into Contract No._____*dated*_____with the Beneficiary, for the execution of _____ (herein after called" the Contract").
2. Furthermore, we understand that, according to the conditions of the Contract, an advance payment in the sum _____( ) is to be made against an advance payment guarantee.
3. At the request of the Applicant, we as Guarantor, hereby irrevocably undertake to pay the Beneficiary any sum or sums not exceeding in total an amount of_____( )[1] upon receipt by us of the Beneficiary's complying demand supported by the Beneficiary's statement, whether in the demand itself or in a separate signed document accompanying or identifying the demand, stating either that the Applicant:
   a) Has used the advance payment for purposes other than the costs of mobilization in respect of th eWorks; or
   b) has failed to repay the advance payment in accordance with the Contract conditions, specifying the amount which the Applicant has failed to repay.
4. A demand under this guarantee may be presented as from the presentation to the Guarantor of a certificate from the Beneficiary's bank stating that the advance payment referred to above has been credited to the Applicant on its account number_____at_____
5. The maximum amount of this guarantee shall be progressively reduced by the amount of the advance payment repaid by the Applicant as specified in copies of interim statements or payment certificates which shall be presented to us. This guarantee shall expire, at the latest, upon our receipt of a copy of the interim payment certificate indicating that ninety (90) percent of the Accepted Contract Amount, less provisional sums, has been certified for payment, or on the_____dayof_____,2_____,[2] whichever is earlier. Consequently, any demand for payment under this guarantee must be received by us at this office on or before that date.
6. The Guarantor agrees to a one-time extension of this guarantee for a period not to exceed *[six months] [one year]*, in response to the Beneficiary's written request for such extension, such request to be presented to the Guarantor before the expiry of the guarantee.

***[NAME OF AUTHORIZED OFfiCIAL, SIGNATURE(S) AND SEALS/STAMPS*]**

Note: All italicized text (including footnotes) is for use in preparing this form and shall be deleted from the final product.

---

[1] *The Guarantor shall insert an amount representing the amount of the advance payment and denominated either in the currency(ies) of the advance payment as specified in the Contract, or in a freely convertible currency acceptable to the Procuring Entity.*

[2] *Insert the expected expiration date of the Time for Completion. The Procuring Entity should note that in the event of an extension of the time for completion of the Contract, the Procuring Entity would need to request an extension of this guarantee from the Guarantor. Such request must be in writing and must be made prior to the expiration date established in the guarantee. In preparing this guarantee, the Procuring Entity might consider adding the following text to the form, at the end of the penultimate paragraph: "The Guarantor agrees to a one-time extension of this guarantee for a period not to exceed [six months] [one year], in response to the Beneficiary's written request for such extension, such request to be presented to the Guarantor before the expiry of the guarantee."*

FORM NO. 7 - RETENTION MONEY SECURITY
[Demand Bank Guarantee]

[Guarantor letterhead]

Beneficiary: _____ ***[INSERT NAME AND ADDRESS OF PROCURING ENTITY]*** **Date:** _____ ***[INSERT DATE OF ISSUE]***
ADVANCE PAYMENT GUARANTEE No.:__
[INSERT GUARANTEE REFERENCE NUMBER]

Guarantor: ***[INSERT NAME AND ADDRESS OF PLACE OF ISSUE, UNLESS INDICATED IN THE LETTERHEAD]***

1. We have been informed that_____*[insert name of Contractor, which in the case of a joint venture shall be the name of the joint venture]* (herein afte rcalled" the Contractor") has entered into Contract No. _____*[insert reference number of the contract]* dated_____with the Beneficiary, for the execution of_____*[insert name of contract and brief description of* Works*]* (herein after called" the Contract").

2. Furthermore, we understand that, according to the conditions of the Contract, the Beneficiary retains moneys upto the limit set forth in the Contract ("the Retention Money"), and that when the Taking-Over Certificate has been issued under the Contract and the first half of the Retention Money has been certified for payment, and payment of *[*insert the second half of the Retention Money] is to be made against a Retention Money guarantee.

3. At the request of the Contractor, we, as Guarantor, hereby irrevocably undertake to pay the Beneficiary any sum or sums not exceeding in total an amount of *[insert amount in figures]*_____(*[insert amount in words*_____*])*[1] upon receipt by us of the Beneficiary's complying demand supported by the Beneficiary's statement, whether in the demand itself or in a separate signed document accompanying or identifying the demand, stating that the Contractor is in breach of its obligation(s) under the Contract, without your needing to prove or show grounds for your demand or the sum specified therein.

4. A demand under this guarantee may be presented as from the presentation to the Guarantor of a certificate from the Beneficiary's bank stating that the second half of the Retention Money as referred to above has been credited to the Contractor on its account number_____at_____*[insert name and address of Applicant's bank]*.

5. This guarantee shall expire no later than the……. Day of……..…, 2…[2], and any demand for payment under it must be received by us at the office indicated above on or before that date.

6. The Guarantor agrees to a one-time extension of this guarantee for a period not to exceed *[six months] [one year]*, in response to the Beneficiary's written request for such extension, such request to be presented to the Guarantor before the expiry of the guarantee.

_____
[NAME OF AUTHORIZED OFFICIAL, SIGNATURE(S) AND SEALS/STAMPS]

Note: All italicized text (including foot notes) is for use in preparing this form and shall be deleted from the final product.

---

[1] *The Guarantor shall insert an amount representing the amount of the second half of the Retention Money.*

[2] *Insert a date that is twenty-eigh tdays after the expiry of retention period after the actual completion date of the contract. The Procuring Entity should note that in the event of an extension of this date for completion of the Contract, the Procuring Entity would need to request an extension of this guarantee from the Guarantor. Such request must be in writing and must be made prior to the expiration date established in the guarantee.*

APPENDIX