KENYA RURAL ROADS AUTHORITY

KITUI REGION

TENDER DOCUMENT

FOR

ROUNTINE MAINTENANCE & SPOT IMPROVEMENT OF

ROAD: C426, MUTITO - SYOMBANDU - MASASINI

TENDER NO. KeRRA/KTI/008/039/130/2025-2026

FOR CONTRACTORS REGISTERED IN THE REGION CATEGORY KERRA/W/2 OR KERRA W/3

OCTOBER, 2025

REGIONAL DIRECTOR KITUI REGION **KENYA RURAL ROADS AUTHORITY** **P.O. BOX 41-90200,** **KITUI.**	**DIRECTOR GENERAL,** **KENYA RURAL ROADS AUTHORITY** **P.O. BOX 48151 – 00100,** **NAIROBI.**

TABLE OF CONTENTS

INVITATION TO TENDER ..... **V**

SECTION I - INSTRUCTIONS TO TENDERERS **1**

A. General Provisions **1**
1. Scope of Tender 1
2. Fraud and Corruption 1
3. Eligible Tenderers 1
4. Eligible Goods, Equipment, and Services 3
5. Tenderer's Responsibilities 3

B. Contents of Tender Documents **3**
6. Sections of Tender Document 3
7. Site visit 4
8. Pre-Tender Meeting 4
9. Clarification and amendment of Tender Documents 5
10. Amendment of Tender Documents 5

C. Preparation of Tenders **5**
11. Cost of Tendering. 5
12. Language of Tender 5
13. Documents Comprising the Tender 5
14. Form of Tender and Schedules 6
15. Alternative Tenders 6
16. Tender Prices and Discounts 6
17. Currencies of Tender and Payment 7
18. Documents Comprising the Technical Proposal 7
19. Documents Establishing the Eligibility and Qualifications of the Tenderer
20. Period of Validity of Tenders 8
21. Tender Security 8
22. Format and Signing of Tender 9

D Sealing and Marking of Tenders **9**
23. Sealing and Marking of Tenders 9
24. Deadline for Submission of Tenders 10
25. Late Tenders 10
26. Withdrawal, Substitution, and Modification of Tenders 10
27. Tender Opening 10

E. Evaluation and Comparison of Tenders **11**
28. Confidentiality 11
29. Clarification of Tenders 11
30. Deviations, Reservations, and Omissions 12
31. Determination of Responsiveness 12
32. Non-material Non-conformities 12
33. Arithmetical Errors 12
34. Conversion to Single Currency 13
35. Margin of Preference and Reservations 13

36. Subcontractors 13
37. Evaluation of Tenders 13
38. Comparison of Tenders 14
39. Abnormally Low Tenders 14
40. Abnormally High Tenders 14
41. Unbalanced and/or Front-Loaded Tenders 14
42. Qualifications of the Tenderer 15
43. Best Evaluated Tender 15
44. Procuring Entity's Right to Accept Any Tender, and to Reject Any or All Tenders 15

F. Award of Contract 15

45. Award Criteria 15
46. Notice of Intention to enter into a Contract 15
47. Standstill Period 16
48. Debriefing by the Procuring Entity 16
49. Letter of Award 16
50. Signing of Contract 16
51. Appointment of Adjudicator 16
52. Performance Security. 16
53. Publication of Procurement Contract. 17
53. Procurement Related Complaints 17

SECTION II-TENDER DATA SHEET(TDS) **18**

SECTION III - EVALUATION AND QUALIFY ON CRITERIA **23**
1. General Provisions 23
2. Preliminary examination for Determination of Responsiveness 23
3. Tender Evaluation (ITT 35) 23
4. Multiple Contracts 23
5. Alternative Tenders (ITT 13.1) 24
6. Margin of Preference is not applicable 24
7. Post qualification and Contract award (ITT 39), more specifically 24

SECTION IV – TENDERING FORMS 25

QUALIFICATION FORMS. 28
1. Form Equ. Equipment 28
2. Form per-1 29
4. FORM PER-2: 30

5. TENDERERS QUALIFICATION WITHOUT PRE-QUALIFICATION 32
FORM ELI -1.1 32
FORM ELI -1.2 33
FORM CON – 2 34
5.4 FORM FIN – 3.1: 36
5.5 FORM FIN – 3.2: 37
5.6 FORM FIN – 3.3: 38
5.7 FORM FIN – 3.4: 38
5.8 FORM EXP - 4.1 39
5.9 FORM EXP - 4.2(a) 40
5.11 FORM EXP - 4.2(b) 41

OTHER FORMS 42

6. FORM OF TENDER 42

a) TENDERER'S ELIGIBILITY- CONFIDENTIAL BUSINESS QUESTIONNAIRE 45
b) CERTIFICATE OF INDEPENDENT TENDER DETERMINATION 48
c) SELF-DECLARATION FORM - SELF DECLARATION OF THE TENDERER 49
d) APPENDIX 1- FRAUD AND CORRUPTION 52

7. FORM OF TENDER SECURITY - DEMAND BANK GUARANTEE 54
8. FORM OF TENDER SECURITY (INSURANCE GUARANTEE) 55
9. FORM OF TENDER-SECURING DECLARATION 56
10. APPENDIX TO TENDER 57

PART II - WORK REQUIREMENTS **58**

SECTION V - DRAWINGS 58
SECTION VI - SPECIFICATIONS 58
SECTION VII - BILLS OF QUANTITIES 59
1. Objectives 59
2. Day work Schedule 59
3. Provisional Sums 59
4. The Bills of Quantities 59

PART III-CONDITIONS OF CONTRACT AND CONTRACT FORMS 60

SECTION VIII - GENERAL CONDITIONS OF CONTRACT 60

A. General
1. Definitions 61
2. Interpretation 61
3. Language and Law 62
4. Project Manager's Decisions 63
5. Delegation 63
6. Communications 63
7. Subcontracting 63
8. Other Contractors 63
9. Personnel and Equipment 63
10. Procuring Entity's and Contractor's Risks 63
11. Procuring Entity's Risks 63
12. Contractor's Risks 64
13. Insurance 64
14. Site Data 64
15. Contractor to Construct the Works 64
16. The Works to Be Completed by the Intended Completion Date 64
17. Approval by the Project Manager 64
18. Safety 65
19. Discoveries 65
20. Possession of the Site 65
21. Access to the Site 65
22. Instructions, Inspections and Audits 65
23. Appointment of the Adjudicator 65
24. Settlement of Claims and Disputes 66
25. Fraud and Corruption 68

B. Time Control 68
1. Program 68
2. Extension of the Intended Completion Date 69
3. Acceleration 69
4. Delays Ordered by the Project Manager 69
5. Management Meetings 69
6. Early Warning 70

C. Quality Control **69**
1. Identifying Defects 69
2. Tests 69
3. Correction of Defects 69
4. Uncorrected Defects 69

D. Cost Control **70**
1. Contract Price 70
2. Changes in the Contract Price. 70
3. Variations 71
4. Cash Flow Forecasts 72
5. Payment Certificates 72
6. Payments 72
7. Compensation Events 73
8. Tax 73
9. Currency y of Payment 73
10. Price Adjustment 73
11. Retention 74
12. Liquidated Damages 74
13. Bonus 74
14. Advance Payment 74
15. Securities 75
16. Dayworks 75
17. Cost of Repairs 75

E. Finishing the Contract **75**
1. Completion 75
2. Taking Over 75
3. Final Account 75
4. Operating and Maintenance Manuals 75
5. Termination 76
6. Payment upon Termination 76
7. Property 76
8. Release from Performance 76

SECTION IX - SPECIAL CONDITIONS OF CONTRACT 77
SECTION X - CONTRACT FORMS 88

FORM No. 1 - NOTIFICATION OF INTENTION TO AWARD 80
FORM No. 2 – REQUEST FOR REVIEW 83
FORM No. 3 - LETTER OF AWARD 83
FORM No. 4 - CONTRACT AGREEMENT 84
FORM No. 5 - PERFORMANCE SECURITY [Option 1 - Unconditional Demand Bank Guarantee] 85
FORM No. 6- PERFORMANCE SECURITY [Option 2– Performance Bond] 86
FORM No. 7- ADVANCE PAYMENT SECURITY 88
FORM No. 8- RETENTION MONEY SECURITY 87
FORM No. 9- BENEFICIAL OWNERSHIP DISCLOSURE FORM 87

INVITATION TO TENDER

Kenya Rural Roads Authority, KITUI Region,
P.O. Box 41-90200,
KITUI.
Email : kitui@kerra.go.ke

BUDGET PROVISION. KSH. 4,385,910.79

TENDER NAME: ROUTINE MAINTENANCE SPOT IMPROVEMENT OF ROAD: C426, MUTITO - SYOMBANDU - MASASINI

TENDER No: KeRRA/KTI/008/039/130/2025-2026

1. The (*Kenya Rural Roads Authority-KITUI Region*) invites sealed tenders from eligible candidates for (***Routine Maintenance and Spot Improvement of ROAD: C426, MUTITO - SYOMBANDU - MASASINI***

2. Tendering will be conducted under a standardized tender document. Tendering is open to all qualified and interested Tenderers.

3. This Tender is for Registered contractors in Kitui Region Category **KERRA/W/2 OR KERRA W/3**

4. Qualified and interested tenderers may obtain further information and inspect the Tender Documents during office hours *[0900 to1600 hours]* at the address given below.

The Regional Director,
Kenya Rural Roads Authority-KITUI Region,
P.O Box 41-90200, KITUI, Kenya.

5. Tender documents may be obtained electronically from the www.tenders.go.ke or Authority's Website *www.kerra.go.ke*. Tender documents obtained electronically will be free of charge.

6. Tender documents may be obtained electronically from the Authority's Website (*www.kerra.go.ke*) or www.tenders.go.ke .Tender documents obtained electronically will be free of charge.

7. Tender documents may be viewed and downloaded for free from the website (*www.kerra.go.ke*) or www.tenders.go.ke. Tenderers who download the tender document must forward their particulars immediately to (*kitui@kerra.go.ke*) to facilitate any further clarification or addendum.

8. Tenders SHALL not be accompanied by a Tender Security

9. The Tenderer shall chronologically serialize all pages of the tender documents submitted.

10. Completed tenders must be delivered to the address below on or before *(13th November, 2025) at 10.00am]*. Electronic Tenders [*will not]* be permitted.

11. Tenders will be opened immediately after the deadline date and time specified above or any deadline date and time specified later. Tenders will be publicly opened in the presence of the Tenderers' designated representatives who choose to attend at the address below.

12. Late tenders will be rejected.

The addresses referred to above are:

A. Address for obtaining further information and for purchasing tender documents

Kenya Rural Roads Authority- KITUI Region,
Kitui Kibwezi Road opposite Magunas Supermarket
P.O Box 41-90200, KITUI, Kenya.

The Officer to be contacted:
Senior Chain Management Officer-KITUI Region,
Email : kitui@kerra.go.ke
Tel : 0202403015 ; Mobile :

B. Address for Submission of Tenders. (Office or Tender Box)

Physical address for hand Courier Delivery to office or Tender Box

The Regional Director,
Kenya Rural Roads Authority- KITUI Region,
P.O BOX 41-90200
KITUI
KENYA

C. Address for Opening of Tenders.

Kenya Rural Roads Authority- KITUI Region,
P.O BOX 41-90200
KITUI
KENYA

Regional Director – KITUI Region

PART 1 - TENDERING PROCEDURES

SECTION I: INSTRUCTIONS TO TENDERERS

A General Provisions

1. Scope of Tender

1.1 The Procuring Entity as defined in the Appendix to Conditions of Contract invites tenders for Works Contract as described in the tender documents. The name, identification, and number of lots (contracts) of this Tender Document are **specified in the TDS.**

2. Fraud and Corruption

2.1 The Procuring Entity requires compliance with the provisions of the Public Procurement and Asset Disposal Act, 2015, Section 62 "Declaration not to engage in corruption". The tender submitted by a person shall include a declaration that the person shall not engage in any corrupt or fraudulent practice and a declaration that the person or his or her sub-contractors are not debarred from participating in public procurement proceedings.

2.2 The Procuring Entity requires compliance with the provisions of the Competition Act 2010, regarding collusive practices in contracting. Any tenderer found to have engaged in collusive conduct shall be disqualified and criminal and/or civil sanctions may be imposed. To this effect, Tenders shall be required to complete and sign the "Certificate of Independent Tender Determination" annexed to the Form of Tender.

2.3 Unfair Competitive Advantage - Fairness and transparency in the tender process require that the firms or their Affiliates competing for a specific assignment do not derive a competitive advantage from having provided consulting services related to this tender. To that end, the Procuring Entity shall indicate in the **Data Sheet** and make available to all the firms together with this tender document all information that would in that respect give such firm any unfair competitive advantage over competing firms.

2.4 Unfair Competitive Advantage -Fairness and transparency in the tender process require that the Firms or their Affiliates competing for a specific assignment do not derive a competitive advantage from having provided consulting services related to this tender being tendered for. The Procuring Entity shall indicate in the **TDS** firms (if any) that provided consulting services for the contract being tendered for. The Procuring Entity shall check whether the owners or controllers of the Tenderer are same as those that provided consulting services. The Procuring Entity shall, upon request, make available to any tenderer information that would give such firm unfair competitive advantage over competing firms.

3. Eligible Tenderers

3.1 A Tenderer may be a firm that is a private entity, a state-owned enterprise or institution subject to ITT 3.7 or any combination of such entities in the form of a joint venture (JV) under an existing agreement or with the intent to enter into such an agreement supported by a letter of intent. Public employees and their close relatives *(spouses, children, brothers, sisters and uncles and aunts)* are not eligible to participate in the tender. In the case of a joint venture, all members shall be jointly and severally liable for the execution of the entire Contract in accordance with the Contract terms. The JV shall nominate a Representative who shall have the authority to conduct all business for and on behalf of any and all the members of the JV during the tendering process and, in the event the JV is awarded the Contract, during contract execution. The maximum number of JV members shall be specified in the **TDS.**

3.2 Public Officers of the Procuring Entity, their Spouses, Child, Parent, Brothers or Sister. Child, Parent, Brother or Sister of a Spouse, their business associates or agents and firms/organizations in which they have a substantial or controlling interest shall not be eligible to tender or be awarded a contract. Public Officers are also not allowed to participate in any procurement proceedings.

3.3 A Tenderer shall not have a conflict of interest. Any tenderer found to have a conflict of interest shall be disqualified. A tenderer may be considered to have a conflict of interest for the purpose of this

tendering process, if the tenderer:

a) Directly or indirectly controls, is controlled by or is under common control with another tenderer; or

b) Receives or has received any direct or indirect subsidy from another tenderer; or

c) Has the same legal representative as another tenderer; or

d) Has a relationship with another tenderer, directly or through common third parties, that puts it in a position to influence the tender of another tenderer, or influence the decisions of the Procuring Entity regarding this tendering process; or

e) Any of its affiliates participated as a consultant in the preparation of the design or technical specifications of the works that are the subject of the tender; or

f) any of its affiliates has been hired (or is proposed to be hired) by the Procuring Entity as Engineer for the Contract implementation; or

g) Would be providing goods, works, or non-consulting services resulting from or directly related to consulting services for the preparation or implementation of the contract specified in this Tender Document or

h) Has a close business or family relationship with a professional staff of the Procuring Entity who:

i) are directly or indirectly involved in the preparation of the Tender document or specifications of the Contract, and/or the Tender evaluation process of such contract; or

ii) would be involved in the implementation or supervision of such Contract unless the conflict stemming from such relationship has been resolved in a manner acceptable to the Procuring Entity throughout the tendering process and execution of the Contract.

3.4 A tenderer shall not be involved in corrupt, coercive, obstructive, collusive or fraudulent practice. A tenderer that is proven to have been involved any of these practices shall be automatically disqualified.

3.5 A Tenderer (either individually or as a JV member) shall not participate in more than one Tender, except for permitted alternative tenders. This includes participation as a subcontractor in other Tenders. Such participation shall result in the disqualification of all Tenders in which the firm is involved. A firm that is not a tenderer or a JV member may participate as a subcontractor in more than one tender. Members of a joint venture may not also make an individual tender, be a subcontractor in a separate tender or be part of another joint venture for the purposes of the same Tender.

3.6 A Tenderer may have the nationality of any country, subject to the restrictions pursuant to ITT 4.8.A Tenderer shall be deemed to have the nationality of a country if the Tenderer is constituted, incorporated or registered in and operates in conformity with the provisions of the laws of that country, as evidenced by its articles of incorporation (or equivalent documents of constitution or association) and its registration documents, as the case may be. This criterion also shall apply to the determination of the nationality of proposed subcontractors or sub- consultants for any part of the Contract including related Services.

3.7 Tenderer that has been debarred from participating in public procurement shall be ineligible to tender or be awarded a contract. The list of debarred firms and individuals is available from the website of PPRA www.ppra.go.ke.

3.8 Tenderers that are state-owned enterprises or institutions may be eligible to compete and be awarded a Contract(s) only if they are accredited by PPRA to be (i) a legal public entity of the state Government and/or public administration, (ii) financially autonomous and not receiving any significant subsidies or budget support from any public entity or Government, and (iii) operating under commercial law and vested with legal rights and liabilities similar to any commercial enterprise to enable it compete with firms in the private sector on an equal basis.

3.9 A Firms and individuals may be ineligible if their countries of origin (a) as a matter of law or official regulations, Kenya prohibits commercial relations with that country, or (b) by an act of compliance with a decision of the United Nations Security Council taken under Chapter VII of the Charter of the United Nations, Kenya prohibits any import of goods or contracting of works or services from that

country, or any payments to any country, person, or entity in that country. A tenderer shall provide such documentary evidence of eligibility satisfactory to the Procuring Entity, as the Procuring Entity shall reasonably request.

3.10 Foreign tenderers are required to source at least forty (40%) percent of their contract inputs (in supplies, subcontracts and labor) from national suppliers and contractors. To this end, a foreign tenderer shall provide in its tender documentary evidence that this requirement is met. Foreign tenderers not meeting this criterion will be automatically disqualified. Information required to enable the Procuring Entity determine if this condition is met shall be provided in for this purpose is be provided in *"SECTION III - EVALUATION AND QUALIFICATION CRITERIA, Item 9".*

3.11 Pursuant to the eligibility requirements of ITT 4.10, a tender is considered a foreign tenderer, if the tenderer is not registered in Kenya or if the tenderer is registered in Kenya and has less than 51 percent ownership by Kenyan Citizens. JVs are considered as foreign tenderers if the individual member firms are not registered in Kenya or if are registered in Kenya and have less than 51 percent ownership by Kenyan citizens. The JV shall not subcontract to foreign firms more than 10 percent of the contract price, excluding provisional sums.

3.12 The National Construction Authority Act of Kenya requires that all local and foreign contractors be registered with the National Construction Authority and be issued with a Registration Certificate before they can undertake any construction works in Kenya. Registration shall not be a condition for tender, but it shall be a condition of contract award and signature. A selected tenderer shall be given opportunity to register before such award and signature of contract. Application for registration with National Construction Authority may be accessed from the website www.nca.go.ke.

3.13 The Competition Act of Kenya requires that firms wishing to tender as Joint Venture undertakings which may prevent, distort or lessen competition in provision of services are prohibited unless they are exempt in accordance with the provisions of Section 25 of the Competition Act, 2010. JVs will be required to seek for exemption from the Competition Authority. Exemption shall not be a condition for tender, but it shall be a condition of contract award and signature. A JV tenderer shall be given opportunity to seek such exemption as a condition of award and signature of contract. Application for exemption from the Competition Authority of Kenya may be accessed from the website www.cak.go.ke

3.14 A Kenyan tenderer shall provide evidence of having fulfilled his/her tax obligations by producing a valid tax clearance certificate or tax exemption certificate issued by the Kenya Revenue Authority.

4. Eligible Goods, Equipment, and Services

4.1 Goods, equipment and services to be supplied under the Contract may have their origin in any country that is not eligible under ITT 3.9. At the Procuring Entity's request, Tenderers may be required to provide evidence of the origin of Goods, equipment and services.

4.2 Any goods, works and production processes with characteristics that have been declared by the relevant national environmental protection agency or by other competent authority as harmful to human beings and to the environment shall not be eligible for procurement.

5. Tenderer's Responsibilities

5.1 The tenderer shall bear all costs associated with the preparation and submission of his/her tender, and the Procuring Entity will in no case be responsible or liable for those costs.

5.2 The tenderer, at the tenderer's own responsibility and risk, is encouraged to visit and examine the Site of the Works and its surroundings, and obtain all information that may be necessary for preparing the tender and entering into a contract for construction of the Works. The costs of visiting the Site shall be at the tenderer's own expense.

5.3 The Tenderer and any of its personnel or agents will be granted permission by the Procuring Entity to enter upon its premises and lands for the purpose of such visit. The Tenderer shall indemnify the Procuring Entity against all liability arising from death or personal injury, loss of or damage to

property, and any other losses and expenses incurred as a result of the inspection.

5.4 The tenderer shall provide in the Form of Tender and Qualification Information, a preliminary description of the proposed work method and schedule, including charts, as necessary or required.

B. Contents of Tender Documents

6. Sections of Tender Document

6.1 The tender document consists of Parts 1, 2, and 3, which includes all the sections specified below, and which should be read in conjunction with any Addenda issued in accordance with ITT 8.

PART 1 Tendering Procedures

i) Section I - Instructions to Tenderers (ITT)
ii) Section II - Tender Data Sheet (TDS)
iii) Section III - Evaluation and Qualification Criteria
iv) Section IV - Tendering Forms

PART 2 Works Requirements

i) Section V - Drawings
ii) Section VI - Specifications
iii) Section VII - Bills of Quantities

PART 3 Conditions of Contract and Contract Forms

i) Section VIII - General Conditions of Contract (GCC)
ii) Section IX - Special Conditions of Contract (SC)
iii) Section X - Contract Forms

6.2 The Invitation to Tender Document (ITT) issued by the Procuring Entity is not part of the Contract documents.

6.3 Unless obtained directly from the Procuring Entity, the Procuring Entity is not responsible for the completeness of the Tender document, responses to requests for clarification, the minutes of the pre-Tender meeting (if any), or Addenda to the Tender document in accordance with ITT 8. In case of any contradiction, documents obtained directly from the Procuring Entity shall prevail.

The Tenderer is expected to examine all instructions, forms, terms, and specifications in the Tender Document and to furnish with its Tender all information and documentation as is required by the Tender document.

7. Site Visit

7.1 The Tenderer, at the Tenderer's own responsibility and risk, is encouraged to visit and examine and inspect the Site of the Required Services and its surroundings and obtain all information that may be necessary for preparing the Tender and entering into a contract for the Services. The costs of visiting the Site shall be at the Tenderer's own expense.

8. Pre-Tender Meeting

8.1 The Procuring Entity shall specify in the **TDS** if a pre-tender meeting will be held, when and where. The Procuring Entity shall also specify in the **TDS** if a pre-arranged pretender site visit will be held and when. The Tenderer's designated representative is invited to attend a pre-arranged pretender visit of the site of the works. The purpose of the meeting will be to clarify issues and to answer questions on any matter that may be raised at that stage.

8.2 The Tenderer is requested to submit any questions in writing, to reach the Procuring Entity not later than the period specified in the **TDS** before the meeting.

8.3 Minutes of the pre-Tender meeting and the pre-arranged pretender site visit of the site of the works, if applicable, including the text of the questions asked by Tenderers and the responses given, together with any responses prepared after the meeting, will be transmitted promptly to all Tenderers who have acquired the Tender Documents in accordance with ITT 6.3. Minutes shall not identify the source of the questions asked.

8.4 The Procuring Entity shall also promptly publish anonym zed (*no names*) Minutes of the pre-Tender meeting and the pre-arranged pretender visit of the site of the works at the web page identified in the **TDS**. Any modification to the Tender Documents that may become necessary as a result of the pre-tender meeting and the pre-arranged pretender site visit, shall be made by the Procuring Entity exclusively through the issue of an Addendum pursuant to ITT 8 and not through the minutes of the pre-Tender meeting. Nonattendance at the pre-Tender meeting will not be a cause for disqualification of a Tenderer.

9. Clarification and amendments of Tender Documents

9.1 A Tenderer requiring any clarification of the Tender Document shall contact the Procuring Entity in writing at the Procuring Entity's address specified in the **TDS** or raise its enquiries during the pre-Tender meeting and the pre- arranged pretender visit of the site of the works if provided for in accordance with ITT 8.4. The Procuring Entity will respond in writing to any request for clarification, provided that such request is received no later than the period specified in the **TDS** prior to the deadline for submission of tenders. The Procuring Entity shall forward copies of its response to all tenderers who have acquired the Tender Documents in accordance with ITT 6.3, including a description of the inquiry but without identifying its source. If specified in the **TDS**, the Procuring Entity shall also promptly publish its response at the web page identified in the **TDS**. Should the clarification result in changes to the essential elements of the Tender Documents, the Procuring Entity shall amend the Tender Documents appropriately following the procedure under ITT 8.4.

10. Amendment of Tendering Document

10.1 At any time prior to the deadline for submission of Tenders, the Procuring Entity may amend the Tendering document by issuing addenda.

10.2 Any addendum issued shall be part of the tendering document and shall be communicated in writing to all who have obtained the tendering document from the Procuring Entity in accordance with ITT 6.3. The Procuring Entity shall also promptly publish the addendum on the Procuring Entity's web page in accordance with ITT 8.4.

10.3 To give prospective Tenderers reasonable time in which to take an addendum into account in preparing their Tenders, the Procuring Entity shall extend, as necessary, the deadline for submission of Tenders, in accordance with ITT 25.2 below**.**

C. <u>Preparation</u> <u>of</u> <u>Tenders</u>

11. Cost of Tendering

11.1 The Tenderer shall bear all costs associated with the preparation and submission of its Tender, and the Procuring Entity shall not be responsible or liable for those costs, regardless of the conduct or outcome of the tendering process.

12. Language of Tender

12.1 The Tender, as well as all correspondence and documents relating to the tender exchanged by the tenderer and the Procuring Entity, shall be written in the English Language. Supporting documents and printed literature that are part of the Tender may be in another language provided they are accompanied by an accurate and notarized translation of the relevant passages into the English Language, in which case, for purposes of interpretation of the Tender, such translation shall govern.

13. Documents Comprising the Tender

13.1The Tender shall comprise the following:

a) Form of Tender prepared in accordance with ITT 14;
b) Schedules including priced Bill of Quantities, completed in accordance with ITT 14 and ITT 16;
c) Tender Security or Tender-Securing Declaration, in accordance with ITT 21.1;
d) Alternative Tender, if permissible, in accordance with ITT 15;
e) Authorization: written confirmation authorizing the signatory of the Tender to commit the Tenderer, in accordance with ITT 22.3;
f) Qualifications: documentary evidence in accordance with ITT 19establishing the Tenderer's qualifications to perform the Contract if its Tender is accepted;
g) Conformity: a technical proposal in accordance with ITT 18;
h) Any other document required in the **TDS**.

13.2In addition to the requirements under ITT 11.1, Tenders submitted by a JV shall include a copy of the Joint Venture Agreement entered into by all members. Alternatively, a letter of intent to execute a Joint Venture Agreement in the event of a successful Tender shall be signed by all members and submitted with the Tender, together with a copy of the proposed Agreement. The Tenderer shall chronologically serialize pages of all tender documents submitted.

13.3The Tenderer shall furnish in the Form of Tender information on commissions and gratuities, if any, paid or to be paid to agents or any other party relating to this Tender**.**

14. Form of Tender and Schedules

14.1The Form of Tender and Schedules, including the Bill of Quantities, shall be prepared using the relevant forms furnished in Section IV, Tendering Forms. The forms must be completed without any alterations to the text, and no substitutes shall be accepted except as provided under ITT 20.3. All blank spaces shall be filled in with the information requested.

15. Alternative Tenders

15.1Unless otherwise specified in the **TDS**, alternative Tenders shall not be considered.

15.2When alternative times for completion are explicitly invited, a statement to that effect will be included in the **TDS**, and the method of evaluating different alternative times for completion will be described in Section III, Evaluation and Qualification Criteria.

15.3Except as provided under ITT 13.4 below, Tenderers wishing to offer technical alternatives to the requirements of the Tender Documents must first price the Procuring Entity's design as described in the Tender Documents and shall further provide all information necessary for a complete evaluation of the alternative by the Procuring Entity, including drawings, design calculations, technical specifications, breakdown of prices, and proposed construction methodology and other relevant details. Only the technical alternatives, if any, of the Tenderer with the Winning Tender conforming to the basic technical requirements shall be considered by the Procuring Entity. When specified in the **TDS**, Tenderers are permitted to submit alternative technical solutions for specified parts of the Works, and such parts will be identified in the **TDS**, as will the method for their evaluating, and described in Section VII, Works' Requirements.

16. Tender Prices and Discounts

16.1The prices and discounts (including any price reduction) quoted by the Tenderer in the Form of Tender and in the Bill of Quantities shall conform to the requirements specified below.

16.2The Tenderer shall fill in rates and prices for all items of the Works described in the Bill of Quantities. Items against which no rate or price is entered by the Tenderer shall be deemed covered by the rates for other items in the Bill of Quantities and will not be paid for separately by the Procuring Entity. An item not listed in the priced Bill of Quantities shall be assumed to be not included in the Tender, and

provided that the Tender is determined substantially responsive notwithstanding this omission, the average price of the item quoted by substantially responsive Tenderers will be added to the Tender price and the equivalent total cost of the Tender so determined will be used for price comparison.

16.3 The price to be quoted in the Form of Tender, in accordance with ITT 14.1, shall be the total price of the Tender, including any discounts offered.

16.4 The Tenderer shall quote any discounts and the methodology for their application in the Form of Tender, in accordance with ITT 14.1.

16.5 It will be specified in the **TDS** if the rates and prices quoted by the Tenderer are or are not subject to adjustment during the performance of the Contract in accordance with the provisions of the Conditions of Contract, except in cases where the contract is subject to fluctuations and adjustments, not fixed price. In such a case, the Tenderer shall furnish the indices and weightings for the price adjustment formulae in the Schedule of Adjustment Data and the Procuring Entity may require the Tenderer to justify its proposed indices and weightings.

16.6 Where tenders are being invited for individual lots (contracts)or for any combination of lots (packages), tenderers wishing to offer discounts for the award of more than one Contract shall specify in their Tender the price reductions applicable to each package, or alternatively, to individual Contracts within the package. Discounts shall be submitted in accordance with ITT 16.4, provided the Tenders for all lots (contracts) are opened at the same time.

16.7 All duties, taxes, and other levies payable by the Contractor under the Contract, or for any other cause, as of the date 30 days prior to the deadline for submission of Tenders, shall be included in the rates and prices and the total Tender Price submitted by the Tenderer.

17. Currencies of Tender and Payment

17.1 Tenderers shall quote entirely in Kenya Shillings. The unit rates and the prices shall be quoted by the Tenderer in the Bill of Quantities, entirely in Kenya shillings. A Tenderer expecting to incur expenditures in other currencies for inputs to the Works supplied from outside Kenya shall device own ways of getting foreign currency to meet those expenditures.

18. Documents Comprising the Technical Proposal

18.1 The Tenderer shall furnish a technical proposal including a statement of work methods, equipment, personnel, schedule and any other information as stipulated in Section IV, Tender Forms, in sufficient detail to demonstrate the adequacy of the Tenderer's proposal to meet the work's requirements and the completion time.

19. Documents Establishing the Eligibility and Qualifications of the Tenderer

19.1 Tenderers shall complete the Form of Tender, included in Section IV, Tender Forms, to establish Tenderer's eligibility in accordance with ITT 4.

19.2 In accordance with Section III, Evaluation and Qualification Criteria, to establish its qualifications to perform the Contract the Tenderer shall provide the information requested in the corresponding information sheets included in Section IV, Tender Forms.

19.3 A margin of preference will not be allowed. Preference and reservations will be allowed, individually or in joint ventures. Applying for eligibility for Preference and reservations shall supply all information required to satisfy the criteria for eligibility specified in accordance with ITT 33.1.

19.4 Tenderers shall be asked to provide, as part of the data for qualification, such information, including details of ownership, as shall be required to determine whether, according to the classification established by the Procuring Entity, a contractor or group of contractors qualifies for a margin of preference. Further the information will enable the Procuring Entity identify any actual or potential conflict of

interest in relation to the procurement and/or contract management processes, or a possibility of collusion between tenderers, and thereby help to prevent any corrupt influence in relation to the procurement process or contract management.

19.5 The purpose of the information described in ITT 19.4 above overrides any claims to confidentiality which a tenderer may have. There can be no circumstances in which it would be justified for a tenderer to keep information relating to its ownership and control confidential where it is tendering to undertake public sector work and receive public sector funds. Thus, confidentiality will not be accepted by the Procuring Entity as a justification for a Tenderer's failure to disclose, or failure to provide required information on its ownership and control.

19.6 The Tenderer shall provide further documentary proof, information or authorizations that the Procuring Entity may request in relation to ownership and control which information on any changes to the information which was provided by the tenderer under ITT 6.3. The obligations to require this information shall continue for the duration of the procurement process and contract performance and after completion of the contract, if any change to the information previously provided may reveal a conflict of interest in relation to the award or management of the contract.

19.7 All information provided by the tenderer pursuant to these requirements must be complete, current and accurate as at the date of provision to the Procuring Entity. In submitting the information required pursuant to these requirements, the Tenderer shall warrant that the information submitted is complete, current and accurate as at the date of submission to the Procuring Entity.

19.8 If a tenderer fails to submit the information required by these requirements, its tender will be rejected. Similarly, if the Procuring Entity is unable, after taking reasonable steps, to verify to a reasonable degree the information submitted by a tenderer pursuant to these requirements, then the tender will be rejected.

19.9 If information submitted by a tenderer pursuant to these requirements, or obtained by the Procuring Entity (whether through its own enquiries, through notification by the public or otherwise), shows any conflict of interest which could materially and improperly benefit the tenderer in relation to the procurement or contract management process, then:

i) if the procurement process is still ongoing, the tenderer will be disqualified from the procurement process,
ii) if the contract has been awarded to that tenderer, the contract award will be set aside,
iii) the tenderer will be referred to the relevant law enforcement authorities for investigation of whether the tenderer or any other persons have committed any criminal offence.

19.10 If a tenderer submits information pursuant to these requirements that is incomplete, inaccurate or out-of-date, or attempts to obstruct the verification process, then the consequences ITT 6.7 will ensue unless the tenderer can show to the reasonable satisfaction of the Procuring Entity that any such act was not material, or was due to genuine error which was not attributable to the intentional act, negligence or recklessness of the tenderer.

20. Period of Validity of Tenders

20.1 Tenders shall remain valid for the Tender Validity period specified in the **TDS**. The Tender Validity period starts from the date fixed for the Tender submission deadline (as prescribed by the Procuring Entity in accordance with ITT 24). A Tender valid for a shorter period shall be rejected by the Procuring Entity as non-responsive.

20.2 In exceptional circumstances, prior to the expiration of the Tender validity period, the Procuring Entity may request Tenderers to extend the period of validity of their Tenders. The request and the responses shall be made in writing. If a Tender Security is requested in accordance with ITT 21.1, it shall also be extended for thirty (30) days beyond the deadline of the extended validity period. A Tenderer may refuse the request without forfeiting its Tender security. A Tenderer granting the request shall not be

required or permitted to modify its Tender, except as provided in ITT 20.3.

20.3 If the award is delayed by a period exceeding the number of days to be specified in the **TDS** days beyond the expiry of the initial tender validity period, the Contract price shall be determined as follows**:**

a) in the case of **fixed price** contracts, the Contract price shall be the tender price adjusted by the factor specified in the **TDS**;

b) in the case of **adjustable price** contracts, no adjustment shall be made; or in any case, tender evaluation shall be based on the tender price without taking into consideration the applicable correction from those indicated above.

21. Tender Security

21.1 The Tenderer shall furnish as part of its Tender, either a Tender-Securing Declaration or a Tender Security as specified in the **TDS**, in original form and, in the case of a Tender Security, in the amount and currency specified in the **TDS**. A Tender-Securing Declaration shall use the form included in Section IV, Tender Forms**.**

21.2 If a Tender Security is specified pursuant to ITT 19.1, the Tender Security shall be a demand guarantee in any of the following forms at the Tenderer's option:

a) an unconditional Bank Guarantee issued by reputable commercial bank); or

b) an irrevocable letter of credit;

c) a Banker's cheque issued by a reputable commercial bank; or

d) another security specified **in the TDS**,

21.3 If an unconditional bank guarantee is issued by a bank located outside Kenya, the issuing bank shall have a correspondent bank located in Kenya to make it enforceable. The Tender Security shall be valid for thirty (30) days beyond the original validity period of the Tender, or beyond any period of extension if requested under ITT 20.2.

21.4 If a Tender Security or Tender-Securing Declaration is specified pursuant to ITT 19.1, any Tender not accompanied by a substantially responsive Tender Security or Tender-Securing Declaration shall be rejected by the Procuring Entity as non-responsive.

21.5 If a Tender Security is specified pursuant to ITT 21.1, the Tender Security of unsuccessful Tenderers shall be returned as promptly as possible upon the successful Tenderer's signing the Contract and furnishing the Performance Security and any other documents required in the **TDS**. The Procuring Entity shall also promptly return the tender security to the tenderers where the procurement proceedings are terminated, all tenders were determined nonresponsive or a bidder declines to extend tender validity period.

21.6 The Tender Security of the successful Tenderer shall be returned as promptly as possible once the successful Tenderer has signed the Contract and furnished the required Performance Security, and any other documents required in the **TDS**.

21.7 The Tender Security may be forfeited or the Tender-Securing Declaration executed:

e) if a Tenderer withdraws its Tender during the period of Tender validity specified by the Tenderer on the Form of Tender, or any extension thereto provided by the Tenderer; or

f) if the successful Tenderer fails to:

i) sign the Contract in accordance with ITT 50; or

ii) furnish a Performance Security and if required in the **TDS**, and any other documents required in the **TDS**.

21.8 Where tender securing declaration is executed, the Procuring Entity shall recommend to the PPRA that PPRA debars the Tenderer from participating in public procurement as provided in the law.

21.9 The Tender Security or the Tender-Securing Declaration of a JV shall be in the name of the JV that submits the Tender. If the JV has not been legally constituted into a legally enforceable JV at the time of tendering, the Tender Security or the Tender-Securing Declaration shall be in the names of all future members as named in the letter of intent referred to in ITT 4.1 and ITT 11.2.

21.10 A tenderer shall not issue a tender security to guarantee itself.

22. Format and Signing of Tender

22.1 The Tenderer shall prepare one original of the documents comprising the Tender as described in ITT 13 and clearly mark it "ORIGINAL." Alternative Tenders, if permitted in accordance with ITT 15, shall be clearly marked "ALTERNATIVE." In addition, the Tenderer shall submit copies of the Tender, in the number specified in the **TDS** and clearly mark them "COPY." In the event of any discrepancy between the original and the copies, the original shall prevail.

22.2 Tenderers shall mark as "CONFIDENTIAL" all information in their Tenders which is confidential to their business. This may include proprietary information, trade secrets, or commercial or financially sensitive information.

22.3 The original and all copies of the Tender shall be typed or written in indelible ink and shall be signed by a person duly authorized to sign on behalf of the Tenderer. This authorization shall consist of a written confirmation as specified in the **TDS** and shall be attached to the Tender. The name and position held by each person signing the authorization must be typed or printed below the signature. All pages of the Tender where entries or amendments have been made shall be signed or initialed by the person signing the Tender.

22.4 In case the Tenderer is a JV, the Tender shall be signed by an authorized representative of the JV on behalf of the JV, and to be legally binding on all the members as evidenced by a power of attorney signed by their legally authorized representatives.

22.5 Any inter-lineation, erasures, or overwriting shall be valid only if they are signed or initialed by the person signing the Tender.

D. Submission and Opening of Tenders

23. Sealing and Marking of Tenders

23.1 Depending on the sizes or quantities or weight of the tender documents, a tenderer may use an envelope, package or container. The Tenderer shall deliver the Tender in a single sealed envelope, or in a single sealed package, or in a single sealed container bearing the name and Reference number of the Tender, addressed to the Procuring Entity and a warning not to open before the time and date for Tender opening date. Within the single envelope, package or container, the Tenderer shall place the following separate, sealed envelopes:

a) in an envelope or package or container marked "ORIGINAL", all documents comprising the Tender, as described in ITT 11; and
b) in an envelope or package or container marked "COPIES", all required copies of the Tender; and
c) if alternative Tenders are permitted in accordance with ITT 15, and if relevant:
   i) in an envelope or package or container marked "ORIGINAL –ALTERNATIVE TENDER", the alternative Tender; and
   ii) in the envelope or package or container marked "COPIES- ALTERNATIVE TENDER", all required copies of the alternative Tender.

The inner envelopes or packages or containers shall:

a) bear the name and address of the Procuring Entity.
b) bear the name and address of the Tenderer; and
c) bear the name and Reference number of the Tender.

23.2If an envelope or package or container is not sealed and marked as required, the *Procuring Entity* will assume no responsibility for the misplacement or premature opening of the Tender. Tenders that are misplaced or opened prematurely will not be accepted.

24. Deadline for Submission of Tenders

24.1Tenders must be received by the Procuring Entity at the address specified in the **TDS** and no later than the date and time also specified in the **TDS**. When so specified in the **TDS**, Tenderers shall have the option of submitting their Tenders electronically. Tenderers submitting Tenders electronically shall follow the electronic Tender submission procedures specified in the **TDS**.

24.2The Procuring Entity may, at its discretion, extend the deadline for the submission of Tenders by amending the Tender Documents in accordance with ITT 8, in which case all rights and obligations of the Procuring Entity and Tenderers previously subject to the deadline shall thereafter be subject to the deadline as extended.

25. Late Tenders

25.1The Procuring Entity shall not consider any Tender that arrives after the deadline for submission of tenders, in accordance with ITT 24. Any Tender received by the Procuring Entity after the deadline for submission of Tenders shall be declared late, rejected, and returned unopened to the Tenderer.

26. Withdrawal, Substitution, and Modification of Tenders

26.1A Tenderer may withdraw, substitute, or modify its Tender after it has been submitted by sending a written notice, duly signed by an authorized representative, and shall include a copy of the authorization in accordance with ITT 22.3, (except that withdrawal notices do not require copies). The corresponding substitution or modification of the Tender must accompany the respective written notice. All notices must be:

a) prepared and submitted in accordance with ITT 22 and ITT 23 (except that withdrawals notices do not require copies), and in addition, the respective envelopes shall be clearly marked "WITHDRAWAL," "SUBSTITUTION," "MODIFICATION;"and

b) received by the Procuring Entity prior to the deadline prescribed for submission of Tenders, in accordance with ITT 24.

26.2Tenders requested to be withdrawn in accordance with ITT 26.1 shall be returned unopened to the Tenderers.

26.3No Tender may be withdrawn, substituted, or modified in the interval between the deadline for submission of Tenders and the expiration of the period of Tender validity specified by the Tenderer on the Form of Tender or any extension thereof.

27. Tender Opening

27.1Except in the cases specified in ITT 23 and ITT 26.2, the Procuring Entity shall publicly open and read out all Tenders received by the deadline, at the date, time and place specified in the **TDS**, in the presence of Tenderers' designated representatives who chooses to attend. Any specific electronic Tender opening procedures required if electronic Tendering is permitted in accordance with ITT 24.1, shall be as specified in the **TDS**.

27.2First, envelopes marked "WITHDRAWAL" shall be opened and read out and the envelopes with the corresponding Tender shall not be opened, but returned to the Tenderer. No Tender withdrawal shall be permitted unless the corresponding withdrawal notice contains a valid authorization to request the withdrawal and is read out at Tender opening.

27.3Next, envelopes marked "SUBSTITUTION" shall be opened and read out and exchanged with the corresponding Tender being substituted, and the substituted Tender shall not be opened, but returned to the Tenderer. No Tender substitution shall be permitted unless the corresponding substitution notice

contains a valid authorization to request the substitution and is read out at Tender opening.

27.4 Next, envelopes marked "MODIFICATION" shall be opened and read out with the corresponding Tender. No Tender modification shall be permitted unless the corresponding modification notice contains a valid authorization to request the modification and is read out at Tender opening.

27.5 Next, all remaining envelopes shall be opened one at a time, reading out: the name of the Tenderer and whether there is a modification; the total Tender Price, per lot (contract) if applicable, including any discounts and alternative Tenders; the presence or absence of a Tender Security or Tender-Securing Declaration, if required; and any other details as the Procuring Entity may consider appropriate.

27.6 Only Tenders, alternative Tenders and discounts that are opened and read out at Tender opening shall be considered further for evaluation. The Form of Tender and pages of the Bills of Quantities are to be initialed by the members of the tender opening committee attending the opening. The number of representatives of the Procuring Entity to sign shall be specified in the **TDS**.

27.7 At the Tender Opening, the Procuring Entity shall neither discuss the merits of any Tender nor reject any Tender (except for late Tenders, in accordance with ITT 25.1).

27.8 The Procuring **Entity shall prepare minutes of the Tender Opening that shall include, as a minimum:**

a) the name of the Tenderer and whether there is a withdrawal, substitution, or modification;
b) the Tender Price, per lot (contract) if applicable, including any discounts;
c) any alternative Tenders;
d) the presence or absence of a Tender Security, if one was required.
e) number of pages of each tender document submitted.

27.9 The Tenderers' representatives who are present shall be requested to sign the minutes. The omission of a Tenderer's signature on the minutes shall not invalidate the contents and effect of the minutes. A copy of the tender opening register shall be distributed to all Tenderers upon request.

E. Evaluation and Comparison of Tenders

28. Confidentiality

28.1 Information relating to the evaluation of Tenders and recommendation of contract award shall not be disclosed to Tenderers or any other persons not officially concerned with the Tender process until information on Intention to Award the Contract is transmitted to all Tenderers in accordance with ITT 46.

28.2 Any effort by a Tenderer to influence the Procuring Entity in the evaluation of the Tenders or Contract award decisions may result in the rejection of its tender.

28.3 Notwithstanding ITT 28.2, from the time of tender opening to the time of contract award, if a tenderer wishes to contact the Procuring Entity on any **matter related to the tendering process, it shall do so in writing.**

29. Clarification of Tenders

29.1 To assist in the examination, evaluation, and comparison of the tenders, and qualification of the tenderers, the Procuring Entity may, at its discretion, ask any tenderer for a clarification of its tender, given a reasonable time for a response. Any clarification submitted by a tenderer that is not in response to a request by the Procuring Entity shall not be considered. The Procuring Entity's request for clarification and the response shall be in writing. No change, including any voluntary increase or decrease, in the prices or substance of the tender shall be sought, offered, or permitted, except to confirm the correction of arithmetic errors discovered by the Procuring Entity in the evaluation of the

tenders, in accordance with ITT 33.

29.2 If a tenderer does not provide clarifications of its tender by the date and time set in the Procuring Entity's request for clarification, its Tender may be rejected.

30. Deviations, Reservations, and Omissions

30.1 During the evaluation of tenders, the following definitions apply:

a) "Deviation" is a departure from the requirements specified in the tender document;

b) "Reservation" is the setting of limiting conditions or withholding from complete acceptance of the requirements specified in the tender document; and

c) "Omission" is the failure to submit part or all of the information or documentation required in the Tender document.

31. Determination of Responsiveness

31.1 The Procuring Entity's determination of a Tender's responsiveness is to be based on the contents of the tender itself, as defined in ITT 13.

31.2 A substantially responsive Tender is one that meets the requirements of the Tender document without material deviation**, reservation, or omission. A material deviation, reservation, or omission is one that, if accepted, would:**

a) affect in any substantial way the scope, quality, or performance of the Works specified in the Contract; or

b) limit in any substantial way, inconsistent with the tender document, the Procuring Entity's rights or the tenderer's obligations under the proposed contract; or

c) if rectified, would unfairly affect the competitive position of other tenderers presenting substantially responsive tenders.

31.3 The Procuring Entity shall examine the technical aspects of the tender submitted in accordance with ITT 18, to confirm that all requirements of Section VII, Works' Requirements have been met without any material deviation, reservation or omission.

31.4 If a tender is not substantially responsive to the requirements of the tender document, it shall be rejected by the Procuring Entity and may not subsequently be made responsive by correction of the material deviation, reservation, or omission.

32. Non-material Non-conformities

32.1 Provided that a tender is substantially responsive, the Procuring Entity may waive any non-conformities in the tender.

32.2 Provided that a Tender is substantially responsive, the Procuring Entity may request that the tenderer submit the necessary information or documentation, within a reasonable period, to rectify nonmaterial non-conformities in the tender related to documentation requirements. Requesting information or documentation on such non- conformities shall not be related to any aspect of the price of the tender. Failure of the tenderer to comply with the request may result in the rejection of its tender.

32.3 Provided that a tender is substantially responsive, the Procuring Entity shall rectify quantifiable nonmaterial non-conformities related to the Tender Price. To this effect, the Tender Price shall be adjusted, for comparison purposes only, to reflect the price of a missing or non-conforming item or component in the manner specified in the **TDS.**

33. Arithmetical Errors

33.1 The tender sum as submitted and read out during the tender opening shall be absolute and final and shall not be the subject of correction, adjustment or amendment in any way by any person or entity.

33.2 Provided that the Tender is substantially responsive, the Procuring Entity shall handle errors on the following basis:

a) Any error detected if considered a major deviation that affects the substance of the tender, shall lead to disqualification of the tender as non-responsive.

b) Any errors in the submitted tender arising from a miscalculation of unit price, quantity, and subtotal and total bid price shall be considered as a major deviation that affects the substance of the tender and shall lead to disqualification of the tender as non-responsive. and

c) if there is a discrepancy between words and figures, the amount in words shall prevail

33.3 Tenderers shall be notified of any error detected in their bid during the notification of a ward.

34. Currency provisions

34.1 Tenders will priced be in Kenya Shillings only. Tenderers quoting in currencies other than in Kenya shillings will be determined non-responsive and rejected.

35. Margin of Preference and Reservations

35.1 No margin of preference shall be allowed on contracts for small works.

35.2 Where it is intended to reserve the contract to specific groups under Small and Medium Enterprises, or enterprise of women, youth and/or persons living with disability, who are appropriately registered as such by the authority to be specified in the **TDS**, a procuring entity shall ensure that the invitation to tender specifically indicates that only businesses/firms belonging to those specified groups are the only ones eligible to tender. Otherwise if no so stated, the invitation will be open to all tenderers.

36. Nominated Subcontractors

36.1 Unless otherwise stated in the **TDS**, the Procuring Entity does not intend to execute any specific elements of the Works by subcontractors selected in advance by the Procuring Entity.

36.2 Tenderers may propose subcontracting up to the percentage of total value of contracts or the volume of works as specified in the **TDS**. Subcontractors proposed by the Tenderer shall be fully qualified for their parts of the Works.

36.3 The subcontractor's qualifications shall not be used by the Tenderer to qualify for the Works unless their specialized parts of the Works were previously designated by the Procuring Entity in the **TDS** as can be met by subcontractors referred to hereafter as 'Specialized Subcontractors', in which case, the qualifications of the Specialized Subcontractors proposed by the Tenderer may be added to the qualifications of the Tenderer.

37. Evaluation of Tenders

37.1 The Procuring Entity shall use the criteria and methodologies listed in this ITT and Section III, Evaluation and Qualification Criteria. No other evaluation criteria or methodologies shall be permitted. By applying the criteria and methodologies the Procuring Entity shall determine the Best Evaluated Tender in accordance with ITT 40.

37.2 To evaluate a Tender, the Procuring Entity shall consider the following:

a) price adjustment due to discounts offered in accordance with ITT 16;

b) converting the amount resulting from applying (a) and (b) above, if relevant, to a single currency in accordance with ITT 39;

c) price adjustment due to quantifiable nonmaterial non-conformities in accordance with ITT 30.3; and

d) any additional evaluation factors specified **in the TDS** and Section III, Evaluation and Qualification Criteria.

37.3 The estimated effect of the price adjustment provisions of the Conditions of Contract, applied over the

period of execution of the Contract, shall not be considered in Tender evaluation.

37.4 In the case of multiple contracts or lots, Tenderers shall be allowed to tender for one or more lots and the methodology to determine the lowest evaluated cost of the lot (contract) combinations, including any discounts offered in the **Form of Tender, is specified in Section III, Evaluation and Qualification Criteria.**

38. Comparison of Tenders

38.1 The Procuring Entity shall compare the evaluated costs of all substantially responsive Tenders established in accordance with ITT 38.2 to determine the Tender that has the lowest evaluated cost.

39. Abnormally Low Tenders

39.1 An Abnormally Low Tender is one where the Tender price, in combination with other elements of the Tender, appears so low that it raises material concerns as to the capability of the Tenderer in regards to the Tenderer's ability to perform the Contract for the offered Tender Price or that genuine competition between Tenderers is compromised.

39.2 In the event of identification of a potentially Abnormally Low Tender, the Procuring Entity shall seek written clarifications from the Tenderer, including detailed price analyses of its Tender price in relation to the subject matter of the contract, scope, proposed methodology, schedule, allocation of risks and responsibilities and any other requirements of the Tender document.

39.3 After evaluation of the price analyses, in the event that the Procuring Entity determines that the Tenderer has failed to demonstrate its capability to perform the Contract for the offered Tender Price, the Procuring Entity shall reject the Tender.

40. Abnormally High Tenders

40.1 An abnormally high price is one where the tender price, in combination with other constituent elements of the Tender, appears unreasonably too high to the extent that the Procuring Entity is concerned that it (the Procuring Entity) may not be getting value for money or it may be paying too high a price for the contract compared with market prices or that genuine competition between Tenderers is compromised.

40.2 In case of an abnormally high tender price, the Procuring Entity shall make a survey of the market prices, check if the estimated cost of the contract is correct and review the Tender Documents to check if the specifications, scope of work and conditions of contract are contributory to the abnormally high tenders. The Procuring Entity may also seek written clarification from the tenderer on the reason for the high tender price. The Procuring Entity shall proceed as follows:

i) If the tender price is abnormally high based on wrong estimated cost of the contract, the Procuring Entity may accept or not accept the tender depending on the Procuring Entity's budget considerations.

ii) If specifications, scope of work and/or conditions of contract are contributory to the abnormally high tender prices, the Procuring Entity shall reject all tenders and may retender for the contract based on revised estimates, specifications, scope of work and conditions of contract, as the case may be.

40.3 If the Procuring Entity determines that the Tender Price is abnormally too high because genuine competition between tenderers is compromised (*often due to collusion, corruption or other manipulations*), the Procuring Entity shall reject all Tenders and shall institute or cause competent Government Agencies to institute an investigation on the cause of the compromise, before retendering**.**

41. Unbalanced and/or Front-Loaded Tenders

41.1 If in the Procuring Entity's opinion, the Tender that is evaluated as the lowest evaluated price is seriously unbalanced and/or front loaded, the Procuring Entity may require the Tenderer to provide

written clarifications. Clarifications may include detailed price analyses to demonstrate the consistency of the tender prices with the scope of works, proposed methodology, schedule and any other requirements of the Tender document.

41.2 After the evaluation of the information and detailed price analyses presented by the Tenderer, the Procuring Entity may as appropriate:

a) accept the Tender; or

b) require that the total amount of the Performance Security be increased at the expense of the Tenderer to a level not exceeding a 30% of the Contract Price; or

c) agree on a payment mode that eliminates the inherent risk of the Procuring Entity paying too much for undelivered works; or

d) reject the Tender,

42. Qualifications of the Tenderer

42.1 The Procuring Entity shall determine to its satisfaction whether the eligible Tenderer that is selected as having submitted the lowest evaluated cost and substantially responsive Tender, meets the qualifying criteria specified in Section III, Evaluation and Qualification Criteria.

42.2 The determination shall be based upon an examination of the documentary evidence of the Tenderer's qualifications submitted by the Tenderer, pursuant to ITT 19. The determination shall not take into consideration the qualifications of other firms such as the Tenderer's subsidiaries, parent entities, affiliates, subcontractors (other than Specialized Subcontractors if permitted in the Tender document), or any other firm(s) different from the Tenderer.

42.3 An affirmative determination shall be a prerequisite for award of the Contract to the Tenderer. A negative determination shall result in disqualification of the Tender, in which event the Procuring Entity shall proceed to the Tenderer who offers a substantially responsive Tender with the next lowest evaluated price to make a similar determination of that Tenderer's qualifications to perform satisfactorily.

42.4 An Abnormally Low Tender is one where the Tender price, in combination with other elements of the Tender, appears so low that it raises material concerns as to the capability of the Tenderer in regards to the Tenderer's ability to perform the Contract for the offered Tender Price.

42.5 In the event of identification of a potentially Abnormally Low Tender, the Procuring Entity shall seek written clarifications from the Tenderer, including detailed price analyses of its Tender price in relation to the subject matter of the contract, scope, proposed methodology, schedule, allocation of risks and responsibilities and any other requirements of the Tender document.

42.6 After evaluation of the price analyses, if the Procuring Entity determines that the Tenderer has failed to demonstrate its capability to perform the Contract for the offered Tender Price, the Procuring Entity shall reject the Tender.

43. Best Evaluated Tender

43.1 Having compared the evaluated prices of Tenders, the Procuring Entity shall determine the Best Evaluated Tender. The Best Evaluated Tender is the Tender of the Tenderer that meets the Qualification Criteria and whose Tender has been determined to be:

a) Most responsive to the Tender document; and

b) the lowest evaluated price.

44. Procuring Entity's Right to Accept Any Tender, and to Reject Any or All Tenders.

44.1 The Procuring Entity reserves the right to accept or reject any Tender and to annul the Tender process and reject all Tenders at any time prior to Contract Award, without thereby incurring any liability to Tenderers. In case of annulment, all Tenderers shall be notified with reasons and all Tenders submitted

and specifically, Tender securities, shall be promptly returned to the Tenderers.

F. Award of Contract

45. Award Criteria

45.1 The Procuring Entity shall award the Contract to the successful tenderer whose tender has been determined to be the Lowest Evaluated Tender.

46. Notice of Intention to enter into a Contract

46.1 Upon award of the contract and Prior to the expiry of the Tender Validity Period the Procuring Entity shall issue a Notification of Intention to Enter into a Contract / Notification of award to all tenderers which shall contain, at a minimum, the following information:

a) the name and address of the Tenderer submitting the successful tender;
b) the Contract price of the successful tender;
c) a statement of the reason(s) the tender of the unsuccessful tenderer to whom the letter is addressed was unsuccessful, unless the price information in (c) above already reveals the reason;
d) the expiry date of the Standstill Period; and
e) instructions on how to request a debriefing and/or submit a complaint during the standstill period;

47. Standstill Period

47.1 The Contract shall not be signed earlier than the expiry of a Standstill Period of 14 days to allow any dissatisfied tender to launch a complaint. Where only one Tender is submitted, the Standstill Period shall not apply.

47.2 Where a Standstill Period applies, it shall commence when the Procuring Entity has transmitted to each Tenderer the Notification of Intention to Enter **into a Contract with the successful Tenderer.**

48. Debriefing by the Procuring Entity

48.1 On receipt of the Procuring Entity's Notification of Intention to Enter into a Contract referred to in ITT 46, an unsuccessful tenderer may make a written request to the Procuring Entity for a debriefing on specific issues or concerns regarding their tender. The Procuring Entity shall provide the debriefing within five days of receipt of the request.

48.2 Debriefings of unsuccessful Tenderers may be done in writing or verbally. The Tenderer shall bear its own costs of attending **such a debriefing meeting.**

49. Letter of Award

49.1 Prior to the expiry of the Tender Validity Period and upon expiry of the Standstill Period specified in ITT 42.1, upon addressing a complaint that has been filed within the Standstill Period, the Procuring Entity shall transmit the Letter of Award to the successful Tenderer. The letter of award shall request the successful tenderer to furnish the Performance Security within 21days of the date of the letter.

50. Signing of Contract

50.1 Upon the expiry of the fourteen days of the Notification of Intention to enter into contract and upon the parties meeting their respective statutory requirements, the Procuring Entity shall send the successful Tenderer the Contract Agreement.

50.2 Within fourteen (14) days of receipt of the Contract Agreement, the successful Tenderer shall sign, date, and return it to the Procuring Entity.

50.3 The written contract shall be entered into within the period specified in the notification of award and before expiry of the tender validity period

51. Appointment of Adjudicator

51.1 The Procuring Entity proposes the person named in the **TDS** to be appointed as Adjudicator under the Contract, at the hourly fee specified in the **TDS**, plus reimbursable expenses. If the Tenderer disagrees with this proposal, the Tenderer should so state in his Tender. If, in the Letter of Acceptance, the Procuring Entity does not agree on the appointment of the Adjudicator, the Procuring Entity will request the Appointing Authority designated in the Special Conditions of Contract (SCC) pursuant to Clause 23.1 of the General Conditions of Contract (GCC), to appoint the Adjudicator.

52. Performance Security

52.1 Within twenty-one (21) days of the receipt of the Letter of Acceptance from the Procuring Entity, the successful Tenderer shall furnish the Performance Security and, any other documents required in the **TDS**, in accordance with the General Conditions of Contract, subject to ITT 40.2 (b), using the Performance Security and other Forms included in Section X, Contract Forms, or another form acceptable to the Procuring Entity. A foreign institution providing a bank guarantee shall have a correspondent financial institution located in Kenya, unless the Procuring Entity has agreed in writing that a correspondent bank is not required.

52.2 Failure of the successful Tenderer to submit the above-mentioned Performance Security and other documents required in the **TDS**, or sign the Contract shall constitute sufficient grounds for the annulment of the award and forfeiture of the Tender Security. In that event the Procuring Entity may award the Contract to the Tenderer offering the next Best Evaluated Tender.

52.3 Performance security shall not be required for contracts estimated to cost less than Kenya shillings five million shillings**.**

53. Publication of Procurement Contract

53.1 Within fourteen days after signing the contract, the Procuring Entity shall publish the awarded contract at its notice boards and websites; and on the Website of the Authority. At the minimum, the notice shall contain the following information:

a) name and address of the Procuring Entity;
b) name and reference number of the contract being awarded, a summary of its scope and the selection method used;
c) the name of the successful Tenderer, the final total contract price, the contract duration.
d) dates of signature, commencement and completion of contract;
e) names of all Tenderers that submitted Tenders, and their Tender prices as read out at Tender opening.

54. Procurement Related Complaints and Administrative Review

54.1 The procedures for making Procurement-related Complaints are as specified in the **TDS**.

54.2 A request for administrative review shall be made in the form provided under contract forms.

Section II - Tender Data Sheet (TDS)

The following specific data shall complement, supplement, or amend the provisions in the Instructions to Tenderers (ITT). Whenever there is a conflict, the provisions herein shall prevail over those in ITT.

ITT Reference	PARTICULARS OF APPENDIX TO INSTRUCTIONS TO TENDERS
	A. General
ITT 1.1	The name of the contract is **SPOT IMPROVEMENT OF C426, MUTITO - SYOMBANDU - MASASINI** The reference number of the Contract is **KeRRA/KTI/008/039/130/2025-2026**
ITT 2.3	The Information made available on competing firms is as follows:
ITT 2.4	The firms that provided consulting services for the contract being tendered for are: _____NA_____ _____ _____
ITT 3.1	Maximum number of members in the Joint Venture (JV) shall be: Two ***[2].***
B. Contents of Tender Document	
8.1	Pretender site visit is MANDATORY and bidders are required to attend organised pretender site visit before tendering through making their own personal transport arrangements and ensure that their pre-tender site visit certificate are signed and stamped by Regional Director or his representative. This will be conducted as per the conditions of tender and instructions to Bidders Clause 7.1 .
ITT 8.2	The Tenderer will submit any questions in writing, to reach the Procuring Entity not later than 5 days before the date of tender opening.
ITT 8.4	The Procuring Entity's website where Minutes of the pre-Tender meeting and the pre-arranged pretender site visit will be published is **https://www.kerra.go.ke. N/A**
ITT 9.1	For Clarification of Tender purposes, for obtaining further information and for purchasing tender documents, the Procuring Entity's address is: (1) Name of Procuring Entity Kenya Rural Roads Authority-KITUI Region, P.O BOX 41-90200 KITUI KENYA **Email: kitui@kerra.go.ke** (2) Physical address for hand Courier Delivery to an office or Tender Box (City, Street, Building, Floor Number and Room) KeRRA KITUI OFFICE Kitui Kibwezi Road Opposite Magunas Supermarket Kenya Rural Roads Authority-KITUI Region, P.O BOX 41-90200 KITUI KENYA **Email: kitui@kerra.go.ke**
C. Preparation of Tenders	
ITP 13.1 (h)	The Tenderer shall submit the following additional documents in its Tender: *N/A*
ITT 15.1	Alternative Tenders *shall not be* considered.
ITT 15.2	Alternative times for completion *shall not be* permitted.
ITT 15.4	Alternative technical solutions shall be permitted for the following parts of the

ITT Reference	PARTICULARS OF APPENDIX TO INSTRUCTIONS TO TENDERS
	Works:*N/A*
ITT 16.5	The prices quoted by the Tenderer shall be *fixed*
ITT 20.1	The Tender validity period shall be 280 days.
ITT 20.3 (a)	(a) The delayed to exceeding _____N/A___number of days. (b) The Tender price shall be adjusted by the following percentages of the tender price: (i) By _____N/A___% of t*he local currency portion of the Contract price adjusted to reflect local inflation during the period of extension,* *and* *(ii) By*_____ N/A _____*% the foreign currency portion of the Contract price adjusted to reflect the international inflation during the period of extension.*
ITT 21.1	A Tender Security __ *shall be* _____ required. A Tender-Securing Declaration _____N/A_____ [*insert "shall be" or "shall not be*"] required. If a Tender Security shall NOT be required
ITT 21.2 (d)	The other Tender Security shall be in form of **a Demand Bank Guarantee or Insurance Guarantee N/A**
ITT 21.5	**On the Performance Security, other documents required shall be** FORM NO. 9 BENEFICIAL OWNERSHIP DISCLOSURE FORM
ITT 22.1	In addition to the original of the Tender, the number of copies is: 1_____
ITT 22.3	The written confirmation of authorization to sign on behalf of the Tenderer shall consist of: written power of attorney drawn by commissioner for oaths and signed by the Directors providing the power of attorney.
D. Submission and Opening of Tenders	
ITT 24.1	(A) For Tender submission purposes only, the Procuring Entity's address is: KeRRA KITUI OFFICE Kitui Kibwezi Road Opposite Magunas Supermarket Kenya Rural Roads Authority- KITUI Region, P.O BOX 41-90200 KITUI KENYA **Email: *kitui@kerra.go.ke*** (4) Date and time for submission of Tenders *(13th November, 2025) at 10.00am]* (5) Tenders **shall not submit** tenders electronically.
ITT 27.1	The Tender opening shall take place at the time and the address for Opening of Tenders provided below: KeRRA KITUI OFFICE Kitui Kibwezi Road Opposite Magunas Supermarket (1) Kenya Rural Roads Authority- KITUI Region, (2) KeRRA KITUI OFFICE Kitui Kibwezi Road Opposite Magunas Supermarket (3) State date and time of tender opening. *(13th November, 2025) at 10.00am*

ITT Reference	PARTICULARS OF APPENDIX TO INSTRUCTIONS TO TENDERS
ITT 27.1	If Tenderers are allowed to submit Tenders electronically, they shall follow the electronic tender submission procedures *N/A* _____ _____
ITT 27.6	The number of representatives of the Procuring Entity to sign is All members of the opening committee.
E. Evaluation, and Comparison of Tenders	
ITT 32.3	The adjustment shall be based on the _____*Everage* _____ *[insert "average" or "highest"]* price of the item or component as quoted in other substantially responsive Tenders. If the price of the item or component cannot be derived from the price of other substantially responsive Tenders, the Procuring Entity shall use its best estimate.
ITT 35.2	The invitation to tender is extended to the following groups that qualify for Reservations _____N/A *(These groups are Small and Medium Enterprises, Women Enterprises, Youth Enterprises and Enterprises of persons living with disability, as the case may be; describe precisely which groups qualify).*
ITT 36.1	At this time, the Procuring Entity *does not intend* to execute certain specific parts of the Works by subcontractors selected in advance.
ITT 36.2	Contractor's may propose subcontracting: Maximum percentage of subcontracting permitted is: ___*40%*_ *of the total contract amount.* Tenderers planning to subcontract more than 10% of total volume of work shall specify, in the Form of Tender, the activity (ies) or parts of the Works to be subcontracted along with complete details of the subcontractors and their qualification and experience.
ITT 36.3	*[Indicate N/A if not applicable]* The parts of the Works for which the Procuring Entity permits Tenderers to propose Specialized Subcontractors are designated as follows: _____N/A_____ For the above-designated parts of the Works that may require Specialized Subcontractors, the relevant qualifications of the proposed Specialized Subcontractors will be added to the qualifications of the Tenderer for the purpose of evaluation.
ITT 37.2 (d)	Additional requirements apply. These are detailed in the evaluation criteria in Section III, Evaluation and Qualification Criteria.
ITT 51.1	The person named to be appointed as Adjudicator is as nominated by the Employer who is registered by the CIARB at an hourly fee of Shs.as provided by CIARB per day.
ITT 52.2	Other documents required are Form No. 9 Beneficial Ownership Disclosure Form.
ITT 54.1	The procedures for making a Procurement-related Complaints are detailed in the "Regulations" available from the PPRA Website www.ppra.go.ke or email complaints@ppra.go.ke. If a Tenderer wishes to make a Procurement-related Complaint, the Tenderer should submit its complaint following these procedures, in writing (by the quickest means available, that is either by hand delivery or email to: For the attention: *[Regional Director]* Title/position: *[Regional Director]* Procuring Entity: *[KeRRA KITUI Region]* Email address*: [kitui@kerra.go.ke]* In summary, a Procurement-related Complaint may challenge any of the following:

ITT Reference	PARTICULARS OF APPENDIX TO INSTRUCTIONS TO TENDERS
	(i) the terms of the Tender Documents; and (ii) the Procuring Entity's decision to award the contract.

SECTION III - EVALUATION AND QUALIFICATION CRITERIA

1. Evaluation and contract award Criteria

The Procuring Entity shall use the criteria and methodologies listed in this Section to evaluate tenders and arrive at the Lowest Evaluated Tender. The tender that (i) meets the qualification criteria, (ii) has been determined to be substantially responsive to the Tender Documents, and (iii) is determined to have the Lowest Evaluated Tender price shall be selected for award of contract.

2. Preliminary examination for Determination of Responsiveness

The Procuring Entity will be examining all tenders to ensure they meet in all respects the eligibility criteria and other requirements in the ITT, and that the tender is complete in all aspects in meeting the requirements of "Part 2 – Procuring Entity's Works Requirements", including checking for tenders with unacceptable errors, abnormally low tenders, abnormally high tenders and tenders that are front loaded. Tenders that do not pass the Preliminary Examination will be considered irresponsive and will not be considered further.

A. PRELIMINARY EXAMINATION

Tenderers shall provide evidence satisfactory to the Employer of their eligibility and of their capability and adequacy of resources to effectively carry out the subject Contract. To this end, the tenderer shall be required to provide latest information set out below:

Table 1:

Item No.	Evaluation Criteria / Condition / Requirement Description	Clause Ref.(Confirm the cross reference)	Requirement Priority
(A)	**PRELIMINARY EVALUATION CRITERIA**		
1)	NO tender Security required	ITT 19.0 ITT 11.1(c) TDS ITP 11.1 (h) – (5) SECTION III A-(5)	**N/A**
2)	NO tender Security required	ITT 19.0 ITT 11.1(c) TDS ITP 11.1 (h) – (5) SECTION III A-(5)	**N/A**
3)	Tenderer is Registered Contractors category KERR/W/2 OR KERRA/W/3	ITT 19.0 ITT 11.1(c) TDS ITP 11.1 (h) – (5) SECTION III A-(5)	**Shall be confirmed by employer**
4)	*A) Properly and dully filled, signed and stamped* ***form of bid*** *and* ***appendix to form of bid*** *by the authorized person through the power of attorney. with a bid validity two hundred and eighty* ***(280)*** *days, from the specified date of bid opening* {(280) days}. *In addition:* *B) The Tenderer must prepare this Form of Tender on stationery with its letterhead clearly showing the Tenderer's complete name and business address.* *C) The Form of Tender shall include the following Forms duly completed and signed by the Tenderer.* ***a) Properly and dully filled, signed and stamped Tenderer's Eligibility; Confidential Business Questionnaire – to establish we are not in any conflict to interest.*** ***b) Properly and dully filled, signed and stamped Certificate of Independent Tender Determination – to declare that we completed the tender without colluding with other tenderers.***	ITT 19.1 ITT 11.1(a) TDS ITP 11.1 (h) – (9) SECTION III EQC A-(11)	**Must be filled/ submitted**

Item No.	Evaluation Criteria / Condition / Requirement Description	Clause Ref.(Confirm the cross reference)	Requirement Priority
	c) Properly and dully filled, signed and stamped Self-Declaration of the Tenderer– to declare that we will, if awarded a contract, not engage in any form of fraud and corruption. ***d) Properly and dully filled, signed and stamped Declaration and commitment to the Code of Ethics for Persons Participating in Public Procurement and Asset Disposal 2015.*** *D) Person signing the Tender shall have the power of attorney given by the Tenderer to be attached with the Tender*		
5)	**Tender Security** is NOT required. The tender guarantee (security) will remain in force up to and including two hundred eighty (280) days after the date of bid submission and including Twenty-Eight (28) days beyond the original validity period {(280) days of the Tender Sub-Clause 19.3 of Instructions to Bidder. ***a) A bank guarantee;*** ***b) A guarantee by an insurance company registered and licensed by the insurance regulatory authority listed by the authority; or*** **c)** ***A guarantee issued by a financial institution approved and licensed by the central bank of Kenya, from a reputable source, and an eligible country.*** ***N/B This form of tender security (tender bond) is not applicable; bidders that submit it to be disqualified***	ITT 19.0 ITT 11.1(c) TDS ITP 11.1 (h) – (5) SECTION III A-(5**)**	**SHALL NOT be submitted**
6)	Certified Certificate of Incorporation issued by Registrar of Companies.	ITT 36 ITT 11.1(a) TDS ITP 11.1 (h) – (1) SECTION III EQC A-(1**)**	**Must be submitted**
7)	Current Certified CR12 Certificate (dated within 6 Months before date of opening) from the Registrar of Companies. This should be provided with Identification Documents of Directors and all individuals listed on the CR12. (ID or Passport). For Corporate Directors, CR12 or its equivalent for the corporate directors, Identification Documents for the corporate Director and its directors MUST be provided.	TDS ITP 11.1 (h) – (2) SECTION III EQC A-(2**)**	**Must be submitted**
8)	Valid certified Current Single Business permit	TDS ITP 11.1 (h) – (3) SECTION III EQC A-(3**)**	**Must be submitted**
9)	Valid Tax Compliance Certificate.	ITT 4.14 TDS ITP 11.1 (h) – (4) SECTION III EQC A-(4**)**	**Must be submitted**
10)	Current Certificate of Registration with National Construction Authority in the Category **"NCA 5 to 8" together** with a valid NCA practicing license	ITT 3.12 TDS ITP 11.1 (h) – (6) SECTION III EQC A-(6**)**	**Must be submitted**
11)	Pretender site visit is MANDATORY and bidders are required to attend organised pretender site visit before tendering through making their own personal transport arrangements and ensure that their pre-tender site visit certificate are signed and stamped by Regional Director or his representative. This will be conducted as per the conditions of tender and instructions to Bidders Clause 7.1 .	ITT 7 SECTION III EQC A-(13**)**	**Must be submitted**
12)	Submit a written power of attorney authorizing the signatory of the bid to commit the Bidder Witnessed by a Commissioner of Oaths.	ITT 20.4 TDS ITP 11.1 (h) – (8) SECTION III EQC A-(7**)**	**Must be submitted**
13)	Chronological Serialization of all the pages of the tender document (this should be sequential in the format of1,2,3,4,5…….) from the first page to the last page.	ITT 12.1 TDS ITP 11.1 (h) – (11) SECTION III EQC A-(14**)**	**Must be Serialized**
14)	The Tender submission **SHALL** be as follows: a) One Original clearly marked "**ORIGINAL",** b) One hard copy C L E A R L Y m a r k e d **"C O P Y"**	ITT 20.1	**Must be submitted**
15)	Provide Properly and dully filled, signed and stamped proof of Eligible Goods, Equipment, and Services *(Bidders to demonstrate*	ITT 4.1 SECTION III EQC A-	**N/A**

Item No.	Evaluation Criteria / Condition / Requirement Description		Clause Ref.(Confirm the cross reference)	Requirement Priority
	that Goods, equipment and services to be supplied under the contract to have their origin in any country that is not determined ineligible under ITT 4.1)		(18**)**	
16)	Provide a Properly and dully filled, signed and stamped proof of having not been declared ineligible by the PPRA as described in ITT 3.7		ITT 3.7 SECTION III EQC A-(20**)**	**Must be submitted**
17)	Submission of Audited Accounts or equivalent acceptable to the Employer, for the last three [3] years (2022, 2023 & 2024) to demonstrate: the current soundness of the applicant's financial position and its prospective long-term profitability, and capacity to have a cash flow amount, turnover and working capital (attach valid licence of the auditor from ICPAK),		SECTION III EQC A-(19**)**	**Must be submitted**
18)	Provide a Properly and dully filled, signed and stamped **Bill of Quantities (any alterations should be countersigned by the authorized person)**		ITT 11.1 (b) SECTION III EQC A-(9**)**	**Must be Filled**
19)	Provide a Properly and dully filled, signed and stamped**, the following schedules of supplementary information.** **NOTE:** *That bidders should not alter the format of any of the forms under this section. Any alteration shall lead to disqualification of the bid*		ITT 17.0 SECTION IV EQC - **(9)**	
1)	FORM 1 FT:	Properly and dully filled, signed and stamped form of foreign tenderers 40% rule (*for foreign tenderers*)	ITT 3.10; ITT 17.0 SECTION IV EQC -(1) SECTION IIIA EQC – (17) & (9)	**N/A**
2)	FORM 2 EQU:	Properly and dully filled, signed and stamped form of Equipment (*A separate Form shall be prepared for each item of equipment listed, or for alternative equipment proposed by the Tenderer*)	ITT 16; ITT 17.0 SECTION IV EQC -(4) SECTION IIIA EQC – (23) & (9)	**Must be Filled**
3)	FORM 3 PER:	Properly and dully filled, signed and stamped Contractor's Representative and Key Personnel Schedule (*Tenderers should provide the names and details of the suitably qualified Contractor's Representative and Key Personnel to perform the Contract separately for each personnel/ candidate; with declaration for both parties; data on their experience should be provided*).	ITT 6.9; ITT 17.0 SECTION IV EQC -(5) SECTION IIIA EQC – (9)	**Must be Filled**
4)	FORM 4:	Properly and dully filled, signed and stamped form of tenderers qualification without pre-qualification. **FORM ELI-1.1 (*Properly and dully filled, signed and stamped form of Tenderer Information*)** Attach copies of original documents of [check the box(es) of the attached original documents] 1) Articles of incorporation (or equivalent documents of constitution or association), and /or documents of registration of the legal entity named above, in accordance with ITT 4.4. 2) A current tax clearance certificate or tax exemption certificate issued by the Kenya Revenue Authority, if tender s a Kenyan tenderer, in accordance with ITT 4.15. 3) In case of state-owned enterprise or institution, in accordance with ITT 4.6 documents establishing: Included are the organizational chart, a list of Board of Directors, and the beneficial ownership.	ITT 17.0 SECTION IIIA EQC – (9)	**Must be Filled**
5)	FORM ELI-1.1	Properly and dully filled, signed and stamped form of Tenderer Information	ITT 17.0 SECTION IV EQC -(6.1) SECTION IIIA EQC –(9)	**Must be Filled**
6)	FORM ELI-1.2	Properly and dully filled, signed and stamped of Tenderer's JV Information Form *(to be completed for each member of Tenderer's JV)*	ITT 17.0; ITT 3.1 SECTION IV EQC -(6.2) SECTION IIIA EQC –(9)	**Must be Filled**
7)	FORM CON– 2	Properly and dully filled, signed and stamped form of Historical Contract Non-Performance, Pending Litigation and Litigation History	ITT 17.0 SECTION IV EQC -(6.3) SECTION IIIA EQC –(9)	**Must be Filled**
8)	FORM FIN –3.1	Properly and dully filled, signed and stamped of Financial Situation and Performance	ITT 17.0 SECTION IV EQC -	**Must be Filled**

Item No.	Evaluation Criteria / Condition / Requirement Description		Clause Ref.(Confirm the cross reference)	Requirement Priority
		Properly and dully filled, signed and stamped form of Sources of Finance	(6.4) SECTION IIIA EQC – (9) & (19)	
		Properly and dully filled, signed and stamped form of financial documents		
9)	FORM FIN – 3.2	Properly and dully filled, signed and stamped form of Average Annual Construction Turnover	ITT 17.0 SECTION IV EQC -(6.5) SECTION IIIA EQC –(9) & (19)	**Must be Filled**
10)	FORM FIN –3.3	Properly and dully filled, signed and stamped form of Financial Resources	ITT 17.0 SECTION IV EQC -(6.6) SECTION IIIA EQC –(9) & (19)	**Must be Filled**
11)	FORM FIN-3.4	Properly and dully filled, signed and stamped form of Current Contract Commitments / Works in Progress	ITT 17.0 SECTION IV EQC -(6.7) SECTION IIIA EQC – (9) & (21)	**Must be Filled**
12)	FORM EXP-4.1	Properly and dully filled, signed and stamped form of General Construction Experience	ITT 17.0 SECTION IV EQC -(6.8) SECTION IIIA EQC – (9)	**Must be Filled**
13)	FORM EXP - 4.2(a)	Properly and dully filled, signed and stamped of Specific Construction and Contract Management Experience.	ITT 17.0 SECTION IV EQC -(6.9) SECTION IIIA EQC – (9) & (22)	**Must be Filled**
14)	FORM EXP - 4.2(b)	Properly and dully filled, signed and stamped form of Construction Experience in Key Activities (*All Sub-contractors for key activities must complete the information in this form as per ITT 34 and Section III, Evaluation and Qualification Criteria, Sub-Factor 4.2.*)	ITT 17.0; ITT 34 SECTION IV EQC - (6.10) SECTION IIIA EQC – (9)	**Must be Filled**
15)	FORM SD1:	Properly and dully filled, signed and stamped form of Self-declaration that the person/tenderer is not debarred in the matter of the public procurement and asset disposal act 2015.	ITT 17.0; ITT 2.1; ITT 3.7; SECTION IIIA EQC – (9)	**Must be Filled**
16)		Must submit APPENDIX 1 form of -fraud and corruption must be attached *(Appendix 1 shall not be modified).*	ITT 17.0; ITT 2.1; SECTION IIIA EQC – (9)	**Must be Submitted**
B) DETAILED EVALUATION CRITERIA				
(i) TECHNICAL & FINANCIAL CAPACITY EVALUATION CRITERIA				
Technical Evaluation Criteria will be as per Table 3 & 4 given below. Tenders that do not pass the Technical & Financial Capacity Examination will be considered non- responsive and will not be considered further.				
C) MARGIN OF PREFERENCE AND RESERVATIONS				
17	Procuring Entity will grant a margin of preference in accordance to Clause 147 and 148 respectively of the PPADR 2020 citizen contractor registered outside Kenya shall only be eligible to benefit from the preferences and reservations scheme when bidding in international tendering and competition. For international/Open Tenders, a margin of preference shall be applied as follows: -		ITT 33	**N/A**
	Group A:	Ten percent (10%) margin of preference of the evaluated price of the tender, where the percentage of shareholding of Kenyan citizens is more than fifty percent (50%);		
	Group B:	Eight percent (8%) margin of preference of the evaluated price of the tender, where the percentage of shareholding of Kenyan citizens is less than fifty percent (50%) but above twenty percent (20%); and		
	Group C:	Six percent (6%) margin of preference of the evaluated price of the tender, where percentage of shareholding of Kenyan citizens is above five percent (5%) and less than twenty percent (20%).		
D) ERROR CHECK				
20)	✓ The tender sum as submitted and read out during the tender opening shall be absolute and final and shall not be the subject of		ITT 31	**Must Meet**

Item No.	Evaluation Criteria / Condition / Requirement Description	Clause Ref.(Confirm the cross reference)	Requirement Priority
	correction, adjustment or amendment in anyway by any person or entity. ✓ Provided that the Tender is substantially responsive, the Procuring Entity shall handle errors on the following basis:		
	A. Any error detected if considered a major deviation that affects the substance of the tender, shall lead to disqualification of the tender as non-responsive.		
	B. Any errors in the submitted tender arising from a miscalculation of unit price, quantity, subtotal and total bid price shall be considered as a major deviation that affects the substance of the tender and shall lead to disqualification of the tender as non-responsive. and		
	C. If there is a discrepancy between words and figures, the amount in words shall prevail		
	D. Abnormally low tenders, abnormally high tenders or any other indications of potential bid rigging practices, and tenders that are front loaded.		
E) POST QUALIFICATION AND CONTRACT AWARD			
	A. The Tenderer shall demonstrate that it has access to, or has available, liquid assets, unencumbered real assets, lines of credit, and other financial means (independent of any contractual advance payment) sufficient to meet the construction cash flow **as per the provisions of the Qualification Criteria Matrix in Table 3 below**	ITT 39	**Must Meet with Supporting Evidence**
	B. Minimum average annual turnover as per the provisions of the Qualification Criteria Matrix in Table 3 below.		
	C. Specific experience requirement as per the provisions of the Qualification Criteria Matrix in Table 3 below.		

Table 3: Technical & Financial Capacity Evaluation

Qualification Criteria				Compliance Requirements			Documentation
				Joint Venture			
No.	**Subject**	**Requirement**	**Single Entity**	**All Parties Combined**	**Each Party**	**One Party**	**Submission Requirements**
1. Historical Contract Non-Performance							
1.1	History of Non-Performing Contracts	Non-performance of a contract did not occur within the last three (3) years prior to the deadline for application submission based on all information on fully settled disputes or litigation. A fully settled dispute or litigation is one that has been resolved in accordance with the Dispute Resolution Mechanism under the respective contract, and where all appeal instances available to the applicant have been exhausted.	Must meet requirement by itself or as party to past or existing JV	N / A	Must meet requirement by itself or as party to past or existing JV	N / A	Form CON-2
1.2	Pending Litigation	All pending litigation shall in total not represent more than thirty percent (30%) of the Applicant's net worth and shall be treated as resolved against the Applicant.	Must meet requirement by itself or as party to past or existing JV	N / A	Must meet requirement by itself or as party to past or existing JV	N / A	Form CON-2
2. Financial Situation							
2.1	Financial Performance	Submission of audited accounts or if not required by the law of the applicant's country, other financial statements acceptable to the Employer, for the last Three [3] years to demonstrate: (a) the current soundness of the applicants' financial position and its prospective long-term profitability, and (b) capacity to have a cash flow amount of min. **KShs. *2,000,000.00*** equivalent working capital	Must meet requirement (a) Must meet requirement (b) Must meet requirement	N / A (a) N / A (b) Must meet requiremen t	Must meet requirement (a) Must meet requirement (b) N / A	N / A (a)N / A (b) N / A	Form FIN - 3.1, with Supporting Evidence
2.2	Average Annual	Minimum average annual construction turnover **KShs**	Must meet	Must meet requirement	Must meet	N/A	Form FIN - 3.2 with Supporting

Qualification Criteria				Compliance Requirements			Documentation
No.	Subject	Requirement	Single Entity	Joint Venture			Submission Requirements
				All Parties Combined	Each Party	One Party	
	Construction Turnover	***3,000,000.00*** calculated as an annual average of the total payments received from construction works within the last Three (3) years.	requirement		((100-50)/ (n-1)) % of the requirement where n= number of joint venture members		Evidence
3. Experience							
3.1	General Construction Experience	Experience under construction contracts in the role of contractor, subcontractor, or management contractor for at least the last three (3) years prior to the applications submission deadline	Must meet requirement	N / A	Must meet requirement	N / A	**4.** Form EXP - 4.1 **Experience**
3.2 (a)	Specific Construction Experience	Participation as contractor, management contractor or subcontractor, in at least **Two (2) contracts** with a value of at least **KShs. 2,000,000.00** within the last **three (3) Years** that have been successfully and substantially completed and that are similar to the proposed works. The similarity shall be based on the physical size, complexity, methods/technology or other characteristics as described in the Scope of Works) For subcontracted Works the Bidder should provide the following: ▪ Award letter of the Main Contractor ▪ Award letter of the subcontract ▪ Completion letter of the Subcontract Proof of payment (attach payment certificates and	Must meet requirement	Must meet requirement	N / A	Must meet requirement	FormEXP.4.2(a) Must Provide Supporting Evidence (Completion Certificate & Award Letter)

Qualification Criteria				Compliance Requirements			Documentation
No.	Subject	Requirement	Single Entity	Joint Venture			Submission Requirements
				All Parties Combined	Each Party	One Party	
		certified bank statements indicating proof of payment)					
3.2 (b)		b) For the above or other contracts executed during the period stipulated in 4.2(a) above, a minimum construction experience in at least one (1) of: - New construction of bridges and approach roads - Other similar road works (gravel, concrete paving blocks or concrete etc.)	Must meet requirements	Must meet requirement	N / A	Must meet requirement	Must Provide Supporting Evidence
4. Work Methodology							
4.1	Work Methodology	Submission of a work methodology	Should demonstrate understanding of the scope of works and other general requirements	Should demonstrate understanding of the scope of works and other general requirement	N/A	N/A	Must Submit
5. Site Staff							
	The site staff shall possess minimum levels set below;						
5.1	Site Agent	Qualification = Diploma in Civil Eng. General General Experience= 3yrs, Specific Experience = 2 Yrs	Must meet requirements	Must meet requirement	N/A	N/A	Must Provide Supporting Evidence (Signed CV & Certified Certificates/ Testimonials)
5.2	Senior Foreman	Qualification =Diploma in Civil Eng. General Experience = 3 yrs, Specific Experience = 2 Yrs	Must meet requirements	Must meet requirement	N/A	N/A	Must Provide Supporting Evidence (Signed CV & Certified Certificates/ Testimonials)
5.3	Site Surveyor	Qualification = Diploma in Surveying General Experience = 3 yrs Specific Experience = 2 Yrs	Must meet requirements	Must meet requirement	N/A	N/A	Must Provide Supporting Evidence (Signed CV & Certified Certificates/ Testimonials)
6. Key Equipment							
6.1	Contractors must meet requirements on key equipment as listed in table 4 below;						Must Provide Supporting

Qualification Criteria				Compliance Requirements			Documentation
No.	Subject	Requirement	Single Entity	Joint Venture			Submission Requirements
				All Parties Combined	Each Party	One Party	
							Evidence (Logbooks, Lease Agreements with Supporting Logbooks)

Table 4: Equipment Holding

Contractors must meet requirements on key equipment as listed below;

Item No.	Equipment Details	Minimum Number Required for the execution of the Contract
A) General plant		
	1.Primary/Secondary/Crusher Unit/Power Screen Min capacity 60/hr	0
	2. Concrete batching plant Min Cap 20m3/hr	0
	Subtotal for A	
B) Bituminous Plants		
	1. Bitumen pressure distributor	0
	2. Bitumen heater tank (10,000 litres)	0
	3. Asphalt plant	0
	4. Paver	0
	5. Chip's spreader	0
	Subtotal for B	0
C) Compactors		
	1.Vibrating compaction plate 300mm wide	-
	2.Vibrating compaction plate 600mm wide	1
	Subtotal for C	1
D) Mobile Compressors		
	1. Medium rock drill (1.5 m3/min)	Optional
	2. Heavy rock drill (1.5 m3/min)	Optional
	Subtotal for D	
E) Concrete Equipment		
	1. Mobile concrete mixers	1
	2. Truck mounted mixers	Optional
	Subtotal for E	1
F) Transport (Tippers, dumpers, water tankers)		
	1. 4x2 tippers payload 7-12 tonnes	1
	2. 6x4 tippers payload 16-20 tonnes	Optional
	3. Articulated trailers (low loaders)	Optional
	4. Dump trucks	1
	5. Flatbed lorries	Optional
	6. Water tankers (18,000- 20,000 lts capacity)	1
	7. Water tankers (8,000- 10,000 lts capacity)	Optional
	Subtotal for F	6
G) Earth moving equipment		
	1. Tractor dozers with dozer attachment (D6-D9)	Optional
	2. Tracked loaders	Optional
	3. Wheel loaders	1
	4. Motor scrappers	Optional
	5. Motor graders (93-205KW)	1
	6. Trench excavators	Optional
	Subtotal for G	2
H) Diesel Generators		
	1. Diesel generators (15- 200KVa)	Optional
	Subtotal H	-
I) Excavators		
	1. Hydraulic crawler mounted (7-10	1

Item No.	Equipment Details	Minimum Number Required for the execution of the Contract
	tonnes) – 0.25-0.4m3 SAE bucket	
	2. Hydraulic wheel mounted (10-16 tonnes) – 0.4- 0.6m3 SAE bucket	Optional
	Subtotal for I	1
J) Rollers		
	1. Self-propelled single drum vibrating (various types, 12 tonnes and above)	1
	2. Pneumatic rubber tyre (1- 2 tonnes/wheel)	0
	3. Sheep foot roller	Optional
	4. Double drum vibrating pedestrian roller	Optional
	Subtotal for J	1
K) Stabilization		
	1. Pulvimixer	0
	Subtotal for K	0
L	LEASED EQUIPMENT	
	Provide evidence of the major items of construction equipment owned if leased attach a copy of certified current ONE year lease agreement and supporting Logbooks or attach current ONE year certified valid lease agreement from Mechanical and Transport Division (MTD)	

QUALIFICATION FORMS

1. FORM EQU: EQUIPMENT

The Tenderer shall provide adequate information to demonstrate clearly that it has the capability to meet the requirements for the key equipment listed in Section III, Evaluation and Qualification Criteria. A separate Form shall be prepared for each item of equipment listed, or for alternative equipment proposed by the Tenderer.

Item of equipment		
Equipment information	Name of manufacturer	Model and power rating
	Capacity	Year of manufacture
Current status	Current location	
	Details of current commitments	
Source	Indicate source of the equipment ☐ Owned ☐ Rented ☐ Leased ☐ Specially manufactured	

Omit the following information for equipment owned by the Tenderer.

Owner	Name of owner	
	Address of owner	
	Telephone	Contact name and title
	Fax	Telex
Agreements	Details of rental / lease / manufacture agreements specific to the project	

2. FORM PER -1

Contractor's Representative and Key Personnel Schedule

Tenderers should provide the names and details of the suitably qualified Contractor's Representative and Key Personnel to perform the Contract. The data on their experience should be supplied using the Form PER-2 below for each candidate.

Contractor' Representative and Key Personnel

1.	**Title of position: Contractor's Representative**	
	Name of candidate:	
	Duration of appointment:	[*insert the whole period (start and end dates) for which this position will be engaged*]
	Time commitment: for this position:	[*insert the number of days/week/months/ that has been scheduled for this position*]
	Expected time schedule for this position:	[*insert the expected time schedule for this position (e.g. attach high level Gantt chart*]
2.	**Title of position:** *[_____]*	
	Name of candidate:	
	Duration of appointment:	[*insert the whole period (start and end dates) for which this position will be engaged*]
	Time commitment: for this position:	[*insert the number of days/week/months/ that has been scheduled for this position*]
	Expected time schedule for this position:	[*insert the expected time schedule for this position (e.g. attach high level Gantt chart*]
3.	**Title of position:** *[_____]*	
	Name of candidate:	
	Duration of appointment:	[*insert the whole period (start and end dates) for which this position will be engaged*]
	Time commitment: for this position:	[*insert the number of days/week/months/ that has been scheduled for this position*]
	Expected time schedule for this position:	[*insert the expected time schedule for this position (e.g. attach high level Gantt chart*]
4.	**Title of position:** *[_____]*	
	Name of candidate:	
	Duration of appointment:	[*insert the whole period (start and end dates) for which this position will be engaged*]
	Time commitment: for this position:	[*insert the number of days/week/months/ that has been scheduled for this position*]
	Expected time schedule for this position:	[*insert the expected time schedule for this position (e.g. attach high level Gantt chart*]
5.	**Title of position:** *[insert title]*	
	Name of candidate	
	Duration of appointment:	[*insert the whole period (start and end dates) for which this position will be engaged*]
	Time commitment: for this position:	[*insert the number of days/week/months/ that has been scheduled for this position*]
	Expected time schedule for this position:	[*insert the expected time schedule for this position (e.g. attach high level Gantt chart*]

3. FORM PER-2:

Resume and Declaration - Contractor's Representative and Key Personnel.

Summarize professional experience in reverse chronological order. Indicate particular technical and managerial experience relevant to the project.

Name of Tenderer

Position [*#1*]: [*title of position from Form PER-1*]		
Personnel information	Name:	Date of birth:
	Address:	E-mail:
	Professional qualifications:	
	Academic qualifications:	
	Language proficiency: *[language and levels of speaking, reading and writing skills]*	
Details		
	Address of Procuring Entity:	
	Telephone:	Contact (manager / personnel officer):
	Fax:	
	Job title:	Years with present Procuring Entity:

Summarize professional experience in reverse chronological order. Indicate particular technical and managerial experience relevant to the project.

Project	**Role**	**Duration of involvement**	**Relevant experience**
[main project details]	*[role and responsibilities on the project]*	*[time in role]*	*[describe the experience relevant to this position]*

Declaration

I, the undersigned *[insert either "Contractor's Representative" or "Key Personnel" as applicable]*, certify that to the best of my knowledge and belief, the information contained in this Form PER-2 correctly describes myself, my qualifications and my experience.

I confirm that I am available as certified in the following table and throughout the expected time schedule for this position as provided in the Tender:

Commitment	**Details**
Commitment to duration of contract:	*[insert period (start and end dates) for which this Contractor's Representative or Key Personnel is available to work on this contract]*
Time commitment:	*[insert period (start and end dates) for which this Contractor's Representative or Key Personnel is available to work on this contract]*

I understand that any misrepresentation or omission in this Form may:

a) be taken into consideration during Tender evaluation;
b) result in my disqualification from participating in the Tender;
c) result in my dismissal from the contract.

Name of Contractor's Representative or Key Personnel: [*insert name*]

Signature: _____

Date: (day month year): _____ Countersignature

of authorized representative of the Tenderer:

Signature:_____ Date: (day month

year): _____

4. TENDERER'S QUALIFICATION WITHOUT PRE-QUALIFICATION

To establish its qualifications to perform the contract in accordance with Section III, Evaluation and Qualification Criteria the Tenderer shall provide the information requested in the corresponding Information Sheets included hereunder.

4.1 FORM ELI -1.1

Tenderer Information Form

Date: _____

ITT No. and title: _____

Tenderer's name
In case of Joint Venture (JV), name of each member:
Tenderer's actual or intended country of registration: *[indicate country of Constitution]*
Tenderer's actual or intended year of incorporation:
Tenderer's legal address [in country of registration]:
Tenderer's authorized representative information Name: _____ Address: _____ Telephone/Fax numbers: _____ E-mail address: _____
1. Attached are copies of original documents of ☐ Articles of Incorporation (or equivalent documents of constitution or association), and/or documents of registration of the legal entity named above, in accordance with ITT 3.6 ☐ In case of JV, letter of intent to form JV or JV agreement, in accordance with ITT 3.5 ☐ In case of state-owned enterprise or institution, in accordance with ITT 3.8, documents establishing: • Legal and financial autonomy • Operation under commercial law • Establishing that the Tenderer is not under the supervision of the Procuring Entity 2. Included are the organizational chart and a list of Board of Directors.

4.2 FORM ELI -1.2

Tenderer's JV Information Form
(to be completed for each member of Tenderer's JV)
Date: _____

ITT No. and title: _____

Tenderer's JV name:
JV member's name:
JV member's country of registration:
JV member's year of constitution:
JV member's legal address in country of constitution:
JV member's authorized representative information Name: _____ Address: _____ Telephone/Fax numbers: _____ E-mail address: _____
1. Attached are copies of original documents of ☐ Articles of Incorporation (or equivalent documents of constitution or association), and/or registration documents of the legal entity named above, in accordance with ITT 3.6. ☐ In case of a state-owned enterprise or institution, documents establishing legal and financial autonomy, operation in accordance with commercial law, and that they are not under the supervision of the Procuring Entity, in accordance with ITT 3.8. 2. Included are the organizational chart and a list of Board of Directors.

4.3 FORM CON – 2

Historical Contract Non-Performance, Pending Litigation and Litigation History

Tenderer's Name: _____
Date: _____
JV Member's Name_____
ITT No. and title: _____

Non-Performed Contracts in accordance with Section III, Evaluation and Qualification Criteria			
☐ Contract non-performance did not occur since 1st January *[insert year]* specified in Section III, Evaluation and Qualification Criteria, Sub-Factor 2.1. ☐ Contract(s) not performed since 1st January *[insert year]* specified in Section III, Evaluation and Qualification Criteria, requirement 2.1			
Year	**Non- performed portion of contract**	**Contract Identification**	**Total Contract Amount (current value, currency, exchange rate and Kenya Shilling equivalent)**
[insert year]	*[insert amount and percentage]*	Contract Identification: *[indicate complete contract name/ number, and any other identification]* Name of Procuring Entity: *[insert full name]* Address of Procuring Entity: *[insert street/city/country]* Reason(s) for nonperformance: *[indicate main reason(s)]*	*[insert amount]*
Pending Litigation, in accordance with Section III, Evaluation and Qualification Criteria			
☐ No pending litigation in accordance with Section III, Evaluation and Qualification Criteria, Sub-Factor 2.3. ☐ Pending litigation in accordance with Section III, Evaluation and Qualification Criteria, Sub-Factor 2.3 as indicated below.			

Year of dispute	**Amount in dispute (currency)**	**Contract Identification**	**Total Contract Amount (currency), Kenya Shilling Equivalent (exchange rate)**
		Contract Identification: _____ Name of Procuring Entity: _____ Address of Procuring Entity: _____ Matter in dispute: _____ Party who initiated the dispute: ____ Status of dispute: _____	
		Contract Identification: Name of Procuring Entity: Address of Procuring Entity: Matter in dispute: Party who initiated the dispute: Status of dispute:	
Litigation History in accordance with Section III, Evaluation and Qualification Criteria			
☐ No Litigation History in accordance with Section III, Evaluation and Qualification Criteria, Sub-Factor 2.4. ☐ Litigation History in accordance with Section III, Evaluation and Qualification Criteria, Sub-Factor 2.4 as indicated below.			
Year of award	**Outcome as percentage of Net Worth**	**Contract Identification**	**Total Contract Amount (currency), Kenya Shilling Equivalent (exchange rate)**

[insert year]	*[insert percentage]*	Contract Identification: [indicate complete contract name, number, and any other identification] Name of Procuring Entity: *[insert full name]* Address of Procuring Entity: *[insert street/city/country]* Matter in dispute: *[indicate main issues in dispute]* Party who initiated the dispute: *[indicate "Procuring Entity" or "Contractor"]* Reason(s) for Litigation and award decision *[indicate main reason(s)]*	*[insert amount]*

4.4 FORM FIN – 3.1:

Financial Situation and Performance

Tenderer's Name: _____
Date: _____
JV Member's Name_____
ITT No. and title: _____

4.4.1. Financial Data

Type of Financial information in_____ (currency)	**Historic information for previous _____*years*, _____ (amount in currency, currency, exchange rate*, USD equivalent)**				
	Year 1	**Year 2**	**Year 3**	**Year 4**	**Year 5**
Statement of Financial Position (Information from Balance Sheet)					
Total Assets (TA)					
Total Liabilities (TL)					
Total Equity/Net Worth (NW)					
Current Assets (CA)					
Current Liabilities (CL)					
Working Capital (WC)					
Information from Income Statement					
Total Revenue (TR)					
Profits Before Taxes (PBT)					
Cash Flow Information					

Type of Financial information in_____ (currency)	**Historic information for previous _____*years*, _____ (amount in currency, currency, exchange rate*, USD equivalent)**				
	Year 1	**Year 2**	**Year 3**	**Year 4**	**Year 5**
Cash Flow from Operating Activities					

*Refer to ITT 15 for the exchange rate

4.4.2 Sources of Finance

Specify sources of finance to meet the cash flow requirements on works currently in progress and for future contract commitments.

No.	**Source of finance**	**Amount (Kenya Shilling equivalent)**
1		
2		
3		

4.4.3 Financial documents

The Tenderer and its parties shall provide copies of financial statements for _____years pursuant Section III, Evaluation and Qualifications Criteria, Sub-factor 3.1. The financial statements shall:

(a) reflect the financial situation of the Tenderer or in case of JV member, and not an affiliated entity (such as parent company or group member).

(b) be independently audited or certified in accordance with local legislation.

(c) be complete, including all notes to the financial statements.

(d) correspond to accounting periods already completed and audited.

☐ Attached are copies of financial statements[1] for the _____years required above; and complying with the requirements

[1] If the most recent set of financial statements is for a period earlier than 12 months from the date of Tender, the reason for this should be justified.

4.5 FORM FIN – 3.2:

Average Annual Construction Turnover

Tenderer's Name: _____
Date: _____
JV Member's Name_____
ITT No. and title: _____

	Annual turnover data (construction only)		
Year	**Amount Currency**	**Exchange rate**	**Kenya Shilling equivalent**
[indicate year]	*[insert amount and indicate currency]*		
Average Annual Construction Turnover *			

* See Section III, Evaluation and Qualification Criteria, Sub-Factor 3.2.

4.6 FORM FIN – 3.3:

Financial Resources

Specify proposed sources of financing, such as liquid assets, unencumbered real assets, lines of credit, and other financial means, net of current commitments, available to meet the total construction cash flow demands of the subject contract or contracts as specified in Section III, Evaluation and Qualification Criteria

Financial Resources		
No.	**Source of financing**	**Amount (Kenya Shilling equivalent)**
1		
2		
3		

4.7 FORM FIN – 3.4:

Current Contract Commitments / Works in Progress

Tenderers and each member to a JV should provide information on their current commitments on all contracts that have been awarded, or for which a letter of intent or acceptance has been received, or for contracts approaching completion, but for which an unqualified, full completion certificate has yet to be issued.

Current Contract Commitments					
	Name of Contract	**Procuring Entity's Contact Address, Tel,**	**Value of Outstanding Work [Current Kenya Shilling /month Equivalent]**	**Estimated Completion Date**	**Average Monthly Invoicing Over Last Six Months [Kenya Shilling /month)]**
1					
2					
3					
4					
5					

4.8 FORM EXP - 4.1

General Construction Experience

Tenderer's Name: _____
Date: _____
JV Member's Name_____
ITT No. and title: _____

Page _____of _____pages

Starting Year	Ending Year	Contract Identification	Role of Tenderer
		Contract name: _____ Brief Description of the Works performed by the Tenderer: _____ Amount of contract: _____ Name of Procuring Entity: _____ Address: _____	
		Contract name: _____ Brief Description of the Works performed by the Tenderer: _____ Amount of contract: _____ Name of Procuring Entity: _____ Address: _____	
		Contract name: _____ Brief Description of the Works performed by the Tenderer: _____ Amount of contract: _____ Name of Procuring Entity: _____ Address: _____	

4.9 FORM EXP - 4.2(a)

Specific Construction and Contract Management Experience

Tenderer's Name: _____
Date: _____
JV Member's Name_____
ITT No. and title: _____

Similar Contract No.	**Information**			
Contract Identification				
Award date				
Completion date				
Role in Contract	Prime Contractor ☐	Member in JV ☐	Management Contractor ☐	Sub-contractor ☐
Total Contract Amount			**Kenya Shilling**	
If member in a JV or sub-contractor, specify participation in total Contract amount				
Procuring Entity's Name:				
Address: Telephone/fax number E-mail:				

4.10 FORM EXP - 4.2 (a) (cont.)

Specific Construction and Contract Management Experience (cont.)

Similar Contract No.	**Information**
Description of the similarity in accordance with Sub-Factor 4.2(a) of Section III:	
1. Amount	
2. Physical size of required works items	
3. Complexity	
4. Methods/Technology	
5. Construction rate for key activities	
6. Other Characteristics	

4.11 FORM EXP - 4.2(b)

Construction Experience in Key Activities

Tenderer's Name: _____
Date: _____
Tenderer's JV Member Name: _____
Sub-contractor's Name[2] (as per ITT 34): _____
ITT No. and title: _____

All Sub-contractors for key activities must complete the information in this form as per ITT 34 and Section III, Evaluation and Qualification Criteria, Sub-Factor 4.2.

1. Key Activity No One: _
_____

	Information			
Contract Identification				
Award date				
Completion date				
Role in Contract	Prime Contractor ☐	Member in JV ☐	Management Contractor ☐	Sub-contractor ☐
Total Contract Amount			**Kenya Shilling**	
Quantity (Volume, number or rate of production, as applicable) performed under the contract per year or part of the year	Total quantity in the contract (i)	Percentage participation (ii)		Actual Quantity Performed (i) x (ii)
Year 1				
Year 2				
Year 3				
Year 4				
Procuring Entity's Name:				
Address: Telephone/fax number E-mail:				

[2] If applicable

	Information
Description of the key activities in accordance with Sub-Factor 4.2(b) of Section III:	

2. Activity No. Two
3. ……

OTHER FORMS

5. FORM OF TENDER
(Amended and issued pursuant to PPRA CIRCULAR No. 02/2022)

INSTRUCTIONS TO TENDERERS

i) All italicized text is to help the Tenderer in preparing this form.

ii) The Tenderer must prepare this Form of Tender on stationery with its letterhead clearly showing the Tenderer's complete name and business address. Tenderers are reminded that this is a mandatory requirement.

iii) Tenderer must complete and sign CERTIFICATE OF INDEPENDENT TENDER DETERMINATION and the SELF DECLARATION FORMS OF THE TENDERER as listed under (s) below.

Date of this Tender submission:.....*[insert date (as day, month and year) of Tender submission]*

Tender Name and Identification:.....*[insert identification]*

Alternative No.:.....*[insert identification No if this is a Tender for an alternative]*

To: ..... *[Insert complete name of Procuring Entity]*

Dear Sirs,

1. In accordance with the Conditions of Contract, Specifications, Drawings and Bills of Quantities for the execution of the above named Works, we, the undersigned offer to construct and complete the Works and remedy any defects therein for the sum of Kenya Shillings [*[Amount in figures]* _____ Kenya Shillings *[amount in words]* _____.

   The above amount includes foreign currency amount (s) of [*state figure or a percentage and currency*] [figures]_____ [words]_____.

   The percentage or amount quoted above does not include provisional sums, and only allows not more than two foreign currencies.

2. We undertake, if our tender is accepted, to commence the Works as soon as is reasonably possible after the receipt of the Project Manager's notice to commence, and to complete the whole of the Works comprised in the Contract within the time stated in the Special Conditions of Contract.

3. We agree to adhere by this tender until_____ *[Insert date]*, and it shall remain binding upon us and may be accepted at any time before that date.

4. Unless and until a formal Agreement is prepared and executed this tender together with your written acceptance thereof, shall constitute a binding Contract between us. We further understand that you are not bound to accept the lowest or any tender you may receive.

5. We, the undersigned, further declare that:
   i) *No reservations:* We have examined and have no reservations to the tender document, including Addenda issued in accordance with ITT 28;
   ii) *Eligibility:* We meet the eligibility requirements and have no conflict of interest in accordance with ITT 3 and 4;
   iii) *Tender-Securing Declaration:* We have not been suspended nor declared ineligible by the Procuring Entity based on execution of a Tender-Securing or Proposal-Securing Declaration in the Procuring Entity's Country in accordance with ITT 19.8;
   iv) Conformity: We offer to execute in conformity with the tendering documents and in accordance with the implementation and completion specified in the construction schedule, the following Works: *[insert a brief description of the Works];*

v) *Tender Price:* The total price of our Tender, excluding any discounts offered in item 1 above is: *[Insert one of the options below as appropriate]*

vi Option 1, in case of one lot: Total price is: [*insert the total price of the Tender in words and figures, indicating the various amounts and the respective currencies*]; Or

Option 2, in case of multiple lots:

a) Total price of each lot [*insert the total price of each lot in words and figures, indicating the various amounts and the respective currencies*]; and

b) Total price of all lots (sum of all lots) [*insert the total price of all lots in words and figures, indicating the various amounts and the respective currencies*];

vii) *Discounts:* The discounts offered and the methodology for their application are:

viii) The discounts offered are: [*Specify in detail each discount offered.*]

ix) The exact method of calculations to determine the net price after application of discounts is shown below: [*Specify in detail the method that shall be used to apply the discounts*];

x) *Tender Validity Period:* Our Tender shall be valid for the period specified in TDS 18.1 (as amended, if applicable) from the date fixed for the Tender submission deadline specified in TDS 22.1 (as amended, if applicable), and it shall remain binding upon us and may be accepted at any time before the expiration of that period;

xi) *Performance Security:* If our Tender is accepted, we commit to obtain a Performance Security in accordance with the Tendering document;

xii) *One Tender Per Tender:* We are not submitting any other Tender(s) as an individual Tender, and we are not participating in any other Tender(s) as a Joint Venture member or as a subcontractor, and meet the requirements of ITT 3.4, other than alternative Tenders submitted in accordance with ITT 13.3;

xiii) *Suspension and Debarment:* We, along with any of our subcontractors, suppliers, Project Manager, manufacturers, or service providers for any part of the contract, are not subject to, and not controlled by any entity or individual that is subject to, a temporary suspension or a debarment imposed by the Public Procurement Regulatory Authority or any other entity of the Government of Kenya, or any international organization.

xiv) *State-owned enterprise or institution:* [*select the appropriate option and delete the other*] [*We are not a state-owned enterprise or institution*] / [*We are a state-owned enterprise or institution but meet the requirements of ITT 3.8*];

xv) *Commissions, gratuities, fees:* We have paid, or will pay the following commissions, gratuities, or fees with respect to the tender process or execution of the Contract: *[insert complete name of each Recipient, its full address, the reason for which each commission or gratuity was paid and the amount and currency of each such commission or gratuity]*.

Name of Recipient	Address	Reason	Amount

(If none has been paid or is to be paid, indicate "none.")

xvi) Binding Contract: We understand that this Tender, together with your written acceptance thereof included in your Letter of Acceptance, shall constitute a binding contract between us, until a formal contract is prepared and executed;

xvii) Not Bound to Accept: We understand that you are not bound to accept the lowest evaluated cost Tender, the Most Advantageous Tender or any other Tender that you may receive;

xviii) Fraud and Corruption: We hereby certify that we have taken steps to ensure that no person acting for us or on our behalf engages in any type of Fraud and Corruption;

xix) Collusive practices: We hereby certify and confirm that the tender is genuine, non-collusive and made with the intention of accepting the contract if awarded. To this effect we have signed the "Certificate of Independent Tender Determination" attached below.

xx) We undertake to adhere by the Code of Ethics for Persons Participating in Public Procurement and Asset Disposal, copy available from_____(*specify website*) during the procurement process and the execution of any resulting contract.

xxi) **Beneficial Ownership Information:** We commit to provide to the procuring entity the Beneficial Ownership Information in conformity with the Beneficial Ownership Disclosure Form upon receipt of notification of intention to enter into a contract in the event we are the successful tenderer in this subject procurement proceeding.

xxii) We, the Tenderer, have duly completed, signed and stamped the following Forms as part of our Tender:

a) Tenderer's Eligibility; Confidential Business Questionnaire – to establish we are not in any conflict to interest.
b) Certificate of Independent Tender Determination – to declare that we completed the tender without colluding with other tenderers.
c) Self-Declaration of the Tenderer – to declare that we will, if awarded a contract, not engage in any form of fraud and corruption.
d) Declaration and commitment to the Code of Ethics for Persons Participating in Public Procurement and Asset Disposal

Further, we confirm that we have read and understood the full content and scope of fraud and corruption as informed in **"Appendix 1- Fraud and Corruption**" attached to the Form of Tender.

Name of the Tenderer: *[*insert complete name of person signing the Tender*]

Name of the person duly authorized to sign the Tender on behalf of the Tenderer: **[*insert complete name of person duly authorized to sign the Tender*]

Title of the person signing the Tender: [*insert complete title of the person signing the Tender*]

Signature of the person named above: [*insert signature of person whose name and capacity are shown*

above] **Date signed** [*insert date of signing*] day of [*insert month*], [*insert year*]

Date signed_____day of_____, _____

Notes
** In the case of the Tender submitted by joint venture specify the name of the Joint Venture as Tenderer*
*** Person signing the Tender shall have the power of attorney given by the Tenderer to be attached with the Tender.*

A. TENDERER'S ELIGIBILITY- CONFIDENTIAL BUSINESS QUESTIONNAIRE

Instruction to Tenderer

Tender is instructed to complete the particulars required in this Form, *one form for each entity if Tender is a JV.* Tenderer is further reminded that it is an offence to give false information on this Form.

(a) **Tenderer's details**

	ITEM	DESCRIPTION
1	Name of the Procuring Entity	
2	Reference Number of the Tender	
3	Date and Time of Tender Opening	
4	Name of the Tenderer	
5	Full Address and Contact Details of the Tenderer.	1. Country 2. City 3. Location 4. Building 5. Floor 6. Postal Address 7. Name and email of contact person.
6	Current Trade License Registration Number and Expiring date	
7	Name, country and full address (*postal and physical addresses, email, and telephone number*) of Registering Body/Agency	
8	Description of Nature of Business	
9	Maximum value of business which the Tenderer handles.	
10	State if Tenders Company is listed in stock exchange, give name and full address (*postal and physical addresses, email, and telephone number*) of state which stock exchange	

General and Specific Details

b) Sole Proprietor, provide the following details.

Name in full_____Age_____ Nationality_ _____Country of Origin_____ Citizenship __ _____

c) Partnership, provide the following details.

	Names of Partners	Nationality	Citizenship	% Shares owned
1				
2				
3				

d) Registered Company, provide the following details.

i) Private or public Company_____

ii) State the nominal and issued capital of the Company_____

Nominal Kenya Shillings (Equivalent)..... Issued

Kenya Shillings (Equivalent).....

iii) Give details of Directors as follows.

	Names of Director	Nationality	Citizenship	% Shares owned
1				
2				
3				

(e) DISCLOSURE OF INTEREST- Interest of the Firm in the Procuring Entity.

i) Are there any person/persons in …… …… (*Name of Procuring Entity)* who has/have an interest or relationship in this firm? Yes/No……

If yes, provide details as follows.

	Names of Person	Designation in the Procuring Entity	Interest or Relationship with Tenderer
1			
2			
3			

ii) Conflict of interest disclosure

	Type of Conflict	Disclosure YES OR NO	If YES provide details of the relationship with Tenderer
1	Tenderer is directly or indirectly controls, is controlled by or is under common control with another tenderer.		
2	Tenderer receives or has received any direct or indirect subsidy from another tenderer.		
3	Tenderer has the same legal representative as another tenderer		
4	Tender has a relationship with another tenderer, directly or through common third parties, that puts it in a position to influence the tender of another tenderer, or influence the decisions of the Procuring Entity regarding this tendering process.		

	Type of Conflict	Disclosure YES OR NO	If YES provide details of the relationship with Tenderer
5	Any of the Tenderer's affiliates participated as a consultant in the preparation of the design or technical specifications of the works that are the subject of the tender.		
6	Tenderer would be providing goods, works, non-consulting services or consulting services during implementation of the contract specified in this Tender Document.		
7	Tenderer has a close business or family relationship with a professional staff of the Procuring Entity who are directly or indirectly involved in the preparation of the Tender document or specifications of the Contract, and/or the Tender evaluation process of such contract.		
8	Tenderer has a close business or family relationship with a professional staff of the Procuring Entity who would be involved in the implementation or supervision of the such Contract.		
9	Has the conflict stemming from such relationship stated in item 7 and 8 above been resolved in a manner acceptable to the Procuring Entity throughout the tendering process and execution of the Contract.		

f) Certification

On behalf of the Tenderer, I certify that the information given above is complete, current and accurate as at the date of submission.

Full Name_____ Title or

Designation_____

_____ _____

(Signature) *(Date)*

B. CERTIFICATE OF INDEPENDENT TENDER DETERMINATION

I, the undersigned, in submitting the accompanying Letter of Tender to the_____[Name of Procuring Entity] for:_____[Name and number of tender] in response to the request for tenders made by:_____[Name of Tenderer] do hereby make the following statements that I certify to be true and complete in every respect:

I certify, on behalf of_____[Name of Tenderer] that:

1. I have read and I understand the contents of this Certificate;

2. I understand that the Tender will be disqualified if this Certificate is found not to be true and complete in every respect;

3. I am the authorized representative of the Tenderer with authority to sign this Certificate, and to submit the Tender on behalf of the Tenderer;

4. For the purposes of this Certificate and the Tender, I understand that the word "competitor" shall include any individual or organization, other than the Tenderer, whether or not affiliated with the Tenderer, who:
   a) has been requested to submit a Tender in response to this request for tenders;
   b) could potentially submit a tender in response to this request for tenders, based on their qualifications, abilities orexperience;

5. The Tenderer discloses that [check one of the following, as applicable:
   a) The Tenderer has arrived at the Tender independently from, and without consultation, communication, agreement or arrangement with, any competitor;
   b) the Tenderer has entered into consultations, communications, agreements or arrangements with one or more competitors regarding this request for tenders, and the Tenderer discloses, in the attached document(s), complete details thereof, including the names of the competitors and the nature of, and reasons for, such consultations, communications, agreements or arrangements;

6. In particular, without limiting the generality of paragraphs (5)(a) or (5)(b) above, there has been no consultation, communication, agreement or arrangement with any competitor regarding:
   a) prices;
   b) methods, factors or formulas used to calculate prices;
   c) the intention or decision to submit, or not to submit, a tender; or
   d) the submission of a tender which does not meet the specifications of the request for Tenders; except as specifically disclosed pursuant to paragraph (5)(b) above;

7. In addition, there has been no consultation, communication, agreement or arrangement with any competitor regarding the quality, quantity, specifications or delivery particulars of the works or services to which this request for tenders relates, except as specifically authorized by the procuring authority or as specifically disclosed pursuant to paragraph (5)(b) above;

8. the terms of the Tender have not been, and will not be, knowingly disclosed by the Tenderer, directly or indirectly, to any competitor, prior to the date and time of the official tender opening, or of the awarding of the Contract, whichever comes first, unless otherwise required by law or as specifically disclosed pursuant to paragraph (5)(b) above.

Name_____ Title__ Date _____

[Name, title and signature of authorized agent of Tenderer and Date].

C. SELF - DECLARATION FORMS

FORM SD1

SELF DECLARATION THAT THE PERSON/TENDERER IS NOT DEBARRED IN THE MATTER OF THE PUBLIC PROCUREMENTAND ASSET DISPOSALACT 2015.

I, ……., of Post Office Box …….……. being a resident of …….. in the Republic of ……. do hereby make a statement as follows: -

1. THAT I am the Company Secretary/ Chief Executive/Managing Director/Principal Officer/Director of ……...…….. *(insert name of the Company)* who is a Bidder in respect of Tender No.
…….. for ……. *(insert tender title/description)* for ……. *(insert name of the Procuring entity)* and duly authorized and competent to make this statement.

2. THAT the aforesaid Bidder, its Directors and subcontractors have not been debarred from participating in procurement proceeding under Part IV of the Act.

3. THAT what is deponed to herein above is true to the best of my knowledge, information and belief.

……. ……. …… (Title)
(Signature) (Date)

Bidder Official Stamp

FORM SD2

SELF DECLARATION THAT THE PERSON/TENDERER WILL NOT ENGAGE IN ANY CORRUPT OR FRAUDULENT PRACTICE

I, ……. of P. O. Box …….....…….. being a resident of …….. in the Republic of ……. do hereby make a statement as follows: -

1. THAT I am the Chief Executive/Managing Director/Principal Officer/Director of ……..... *(insert name of the Company)* who is a Bidder in respect of Tender No. ….....……. for …….. *(insert tender title/description)* for …… *(insert name of the Procuring entity)* and duly authorized and competent to make this statement.

2. THAT the aforesaid Bidder, its servants and/or agents /subcontractors will not engage in any corrupt or fraudulent practice and has not been requested to pay any inducement to any member of the Board, Management, Staff and/or employees and/or agents of ……... *(insert name of the Procuring entity)* which is the procuring entity.

3. THAT the aforesaid Bidder, its servants and/or agents /subcontractors have not offered any inducement to any member of the Board, Management, Staff and/or employees and/or agents of ……. (name of the procuring entity)

4. THAT the aforesaid Bidder will not engage /has not engaged in any corrosive practice with other bidders participating in the subject tender

5. THAT what is deponed to herein above is true to the best of my knowledge information and belief.

……	……..……	.....……
(Title)	(Signature)	(Date)

Bidder's Official Stamp

DECLARATION AND COMMITMENT TO THE CODE OF ETHICS

I ……..……. (person) on behalf of *(Name of the Business/ Company/Firm*) ……. declare that I have read and fully understood the contents of the Public Procurement & Asset Disposal Act, 2015, Regulations and the Code of Ethics for persons participating in Public Procurement and Asset Disposal and my responsibilities under the Code.

I do hereby commit to abide by the provisions of the Code of Ethics for persons participating in Public Procurement and Asset Disposal.

Name of Authorized signatory……..... Sign…….....

Position…….....…….....

Office address……. Telephone…….....…….

E-mail…….....….....…

Name of the Firm/Company…….....……

Date…….....…. (Company Seal/ Rubber

Stamp where applicable)

Witness

Name ……..... Sign.....

Date……

D. APPENDIX 1- FRAUD AND CORRUPTION

(Appendix 1 shall not be modified)

1. Purpose

2. The Government of Kenya's Anti-Corruption and Economic Crime laws and their sanction's policies and procedures, Public Procurement and Asset Disposal Act *(no. 33 of 2015)* and its Regulation, and any other Kenya's Acts or Regulations related to Fraud and Corruption, and similar offences, shall apply with respect to Public Procurement Processes and Contracts that are governed by the laws of Kenya.

3. Requirements

The Government of Kenya requires that all parties including Procuring Entities, Tenderers, (applicants/proposers), Consultants, Contractors and Suppliers; any Sub-contractors, Sub-consultants, Service providers or Suppliers; any Agents (whether declared or not); and any of their Personnel, involved and engaged in procurement under Kenya's Laws and Regulation, observe the highest standard of ethics during the procurement process, selection and contract execution of all contracts, and refrain from Fraud and Corruption and fully comply with Kenya's laws and Regulations as per paragraphs 1.1 above.

Kenya's public procurement and asset disposal act *(no. 33 of 2015)* under Section 66 describes rules to be followed and actions to be taken in dealing with Corrupt, Coercive, Obstructive, Collusive or Fraudulent practices, and Conflicts of Interest in procurement including consequences for offences committed. A few of the provisions noted below highlight Kenya's policy of no tolerance for such practices and behavior: -

1) a person to whom this Act applies shall not be involved in any corrupt, coercive, obstructive, collusive or fraudulent practice; or conflicts of interest in any procurement or asset disposal proceeding;
2) A person referred to under subsection (1) who contravenes the provisions of that sub-section commits an offence;
3) Without limiting the generality of the subsection (1) and (2), the person shall be: -
   a) disqualified from entering into a contract for a procurement or asset disposal proceeding; or
   b) if a contract has already been entered into with the person, the contract shall be voidable;
4) The voiding of a contract by the procuring entity under subsection (7) does not limit any legal remedy the procuring entity may have;
5) An employee or agent of the procuring entity or a member of the Board or committee of the procuring entity who has a conflict of interest with respect to a procurement: -
   a) shall not take part in the procurement proceedings;
   b) shall not, after a procurement contract has been entered into, take part in any decision relating to the procurement or contract; and

c) shall not be a subcontractor for the bidder to whom was awarded contract, or a member of the group of bidders to whom the contract was awarded, but the subcontractor appointed shall meet all the requirements of this Act.

6) An employee, agent or member described in subsection (1) who refrains from doing anything prohibited under that subsection, but for that subsection, would have been within his or her duties shall disclose the conflict of interest to the procuring entity;
7) If a person contravenes subsection (1) with respect to a conflict of interest described in subsection (5)(a) and the contract is awarded to the person or his relative or to another person in whom one of them had a direct or indirect pecuniary interest, the contract shall be terminated and all costs incurred by the public entity shall be made good by the awarding officer. Etc.

In compliance with Kenya's laws, regulations and policies mentioned above, the Procuring Entity:

a) Defines broadly, for the purposes of the above provisions, the terms set forth below as follows:
   i) "corrupt practice" is the offering, giving, receiving, or soliciting, directly or indirectly, of anything of value to influence improperly the actions of another party;
   ii) "fraudulent practice" is any act or omission, including misrepresentation, that knowingly or recklessly misleads, or attempts to mislead, a party to obtain financial or other benefit or to avoid an obligation;

iii) "collusive practice" is an arrangement between two or more parties designed to achieve an improper purpose, including to influence improperly the actions of another party;

iv) "coercive practice" is impairing or harming, or threatening to impair or harm, directly or indirectly, any party or the property of the party to influence improperly the actions of a party;

v) "obstructive practice" is:

- deliberately destroying, falsifying, altering, or concealing of evidence material to the investigation or making false statements to investigators in order to materially impede investigation by Public Procurement Regulatory Authority (PPRA) or any other appropriate authority appointed by Government of Kenya into allegations of a corrupt, fraudulent, coercive, or collusive practice; and/or threatening, harassing, or intimidating any party to prevent it from disclosing its knowledge of matters relevant to the investigation or from pursuing the investigation; or
- acts intended to materially impede the exercise of the PPRA's or the appointed authority's inspection and audit rights provided for under paragraph 2.3 e. below.

b) Defines more specifically, in accordance with the above procurement Act provisions set forth for fraudulent and collusive practices as follows:

"fraudulent practice" includes a misrepresentation of fact in order to influence a procurement or disposal process or the exercise of a contract to the detriment of the procuring entity or the tenderer or the contractor, and includes collusive practices amongst tenderers prior to or after tender submission designed to establish tender prices at artificial non-competitive levels and to deprive the procuring entity of the benefits of free and open competition.

c) Rejects a proposal for award[1] of a contract if PPRA determines that the firm or individual recommended for award, any of its personnel, or its agents, or its sub-consultants, sub-contractors, service providers, suppliers and/ or their employees, has, directly or indirectly, engaged in corrupt, fraudulent, collusive, coercive, or obstructive practices in competing for the contract in question;

d) Pursuant to the Kenya's above stated Acts and Regulations, may sanction or recommend to appropriate authority (ies) for sanctioning and debarment of a firm or individual, as applicable under the Acts and Regulations;

e) Requires that a clause be included in Tender documents and Request for Proposal documents requiring (i) Tenderers (applicants/proposers), Consultants, Contractors, and Suppliers, and their Sub-contractors, Sub-consultants, Service providers, Suppliers, Agents personnel, permit the PPRA or any other appropriate authority appointed by Government of Kenya to inspect[2] all accounts, records and other documents relating to the procurement process, selection and/or contract execution, and to have them audited by auditors appointed by the PPRA or any other appropriate authority appointed by Government of Kenya; and

f) Pursuant to Section 62 of the above Act, requires Applicants/Tenderers to submit along with their Applications/Tenders/Proposals a "Self-Declaration Form" as included in the procurement document declaring that they and all parties involved in the procurement process and contract execution have not engaged/will not engage in any corrupt or fraudulent practices.

---

[1] *For the avoidance of doubt, a party's ineligibility to be awarded a contract shall include, without limitation, (i) applying for pre-qualification, expressing interest in a consultancy, and tendering, either directly or as a nominated sub-contractor, nominated consultant, nominated manufacturer or supplier, or nominated service provider, in respect of such contract, and (ii) entering into an addendum or amendment introducing a material modification to any existing contract.*

[2] *Inspections in this context usually are investigative (i.e., forensic) in nature. They involve fact-finding activities undertaken by the Investigating Authority or persons appointed by the Procuring Entity to address specific matters related to investigations/audits, such as evaluating the veracity of an allegation of possible Fraud and Corruption, through the appropriate mechanisms. Such activity includes but is not limited to: accessing and examining a firm's or individual's financial records and information, and making copies thereof as relevant; accessing and examining any other documents, data and information (whether in hard copy or electronic format) deemed relevant for the investigation/audit, and making copies thereof as relevant; interviewing staff and other relevant individuals; performing physical inspections and site visits; and obtaining third party verification of information.*

FORM OF TENDER SECURITY-[Option 1–Demand Bank Guarantee]

Beneficiary:_____

Request forTenders No:

_____

Date:_____

TENDER GUARANTEE No.:_____

Guarantor: _____

1. We have been informed that_____(here inafter called "the Applicant") has submitted or will submit to the Beneficiary its Tender (here inafter called" the Tender") for the execution of_____ under Request for Tenders No._____("the ITT").

2. Furthermore, we understand that, according to the Beneficiary's conditions, Tenders must be supported by a Tender guarantee.

3. At the request of the Applicant, we, as Guarantor, hereby irrevocably undertake to pay the Beneficiary any sum or sums not exceeding in total an amount of_____(_____) upon receipt by us of the Beneficiary's complying demand, supported by the Beneficiary's statement, whether in the demand itself or a separate signed document accompanying or identifying the demand, stating that either the Applicant:

(a) has withdrawn its Tender during the period of Tender validity set forth in the Applicant's Letter of Tender ("the Tender Validity Period"), or any extension thereto provided by the Applicant; or

b) having been notified of the acceptance of its Tender by the Beneficiary during the Tender Validity Period or any extension there to provided by the Applicant, (i) has failed to execute the contract agreement, or (ii) has failed to furnish the Performance.

4. This guarantee will expire: (a) if the Applicant is the successful Tenderer, upon our receipt of copies of the contract agreement signed by the Applicant and the Performance Security and, or (b) if the Applicant is not the successful Tenderer, upon the earlier of (i) our receipt of a copy of the Beneficiary's notification to the Applicant of the results of the Tendering process; or (ii) thirty days after the end of the Tender Validity Period.

5. Consequently, any demand for payment under this guarantee must be received by us at the office indicated above onor before that date.

_____

[signature(s)]

Note: All italicized text is for use in preparing this form and shall be deleted from the final product.

FORMAT OF TENDER SECURITY [Option 2–Insurance Guarantee]

TENDER GUARANTEE No.: _____

1. Whereas …… [*Name of the tenderer]* (hereinafter called "the tenderer") has submitted its tender dated …… [*Date of submission of tender]* for the …… *[Name and/or description of the tender]* (hereinafter called "the Tender") for the execution of_____under Request for Tenders No._____("the ITT").

2. KNOW ALL PEOPLE by these presents that WE …… of …… [**Name of Insurance Company**] having our registered office at …… (hereinafter called "the Guarantor"), are bound unto …….. [*Name of Procuring Entity*] (hereinafter called "the Procuring Entity") in the sum of …… (Currency and guarantee amount) for which payment well and truly to be made to the said Procuring Entity, the Guarantor binds itself, its successors and assigns, jointly and severally, firmly by these presents.

   Sealed with the Common Seal of the said Guarantor this ___day of _____ 20 __.

3. NOW, THEREFORE, THE CONDITION OF THIS OBLIGATION is such that if the Applicant:

   a) has withdrawn its Tender during the period of Tender validity set forth in the Principal's Letter of Tender ("the Tender Validity Period"), or any extension thereto provided by the Principal; or

   b) having been notified of the acceptance of its Tender by the Procuring Entity during the Tender Validity Period or any extension thereto provided by the Principal; (i) failed to execute the Contract agreement; or (ii) has failed to furnish the Performance Security, in accordance with the Instructions to tenderers ("ITT") of the Procuring Entity's Tendering document.

   then the guarantee undertakes to immediately pay to the Procuring Entity up to the above amount upon receipt of the Procuring Entity's first written demand, without the Procuring Entity having to substantiate its demand, provided that in its demand the Procuring Entity shall state that the demand arises from the occurrence of any of the above events, specifying which event(s) has occurred.

4. This guarantee will expire: (a) if the Applicant is the successful Tenderer, upon our receipt of copies of the contract agreement signed by the Applicant and the Performance Security and, or (b) if the Applicant is not the successful Tenderer, upon the earlier of (i) our receipt of a copy of the Beneficiary's notification to the Applicant of the results of the Tendering process; or (ii)twenty-eight days after the end of the Tender Validity Period.

5. Consequently, any demand for payment under this guarantee must be received by us at the office indicated above on or before that date.

_____	_____
[Date]	*[Signature of the Guarantor]*
_____	_____
[Witness]	*[Seal]*

Note: All italicized text is for use in preparing this form and shall be deleted from the final product.

TENDER-SECURING DECLARATION FORM

[The Bidder shall complete this Form in accordance with the instructions indicated]

Date:.....*[insert date (as day, month and year) of Tender Submission]*
Tender No.:.....*[insert number of tendering process]*
To:..... *[insert complete name of Purchaser]* I/We, the undersigned, declare that:

1. I/We understand that, according to your conditions, bids must be supported by a Tender-Securing Declaration.

2. I/We accept that I/we will automatically be suspended from being eligible for tendering in any contract with the Purchaser for the period of time of [insert number of months or years] starting on [insert date], if we are in breach of our obligation(s) under the bid conditions, because we – (a) have withdrawn our tender during the period of tender validity specified by us in the Tendering Data Sheet; or (b) having been notified of the acceptance of our Bid by the Purchaser during the period of bid validity, (i) fail or refuse to execute the Contract, if required, or (ii) fail or refuse to furnish the Performance Security, in accordance with the instructions to tenders.

3. I/We understand that this Tender Securing Declaration shall expire if we are not the successful Tenderer(s), upon the earlier of:
   a) our receipt of a copy of your notification of the name of the successful Tenderer; or
   b) thirty days after the expiration of our Tender.

4. I/We understand that if I am/we are/in a Joint Venture, the Tender Securing Declaration must be in the name of the Joint Venture that submits the bid, and the Joint Venture has not been legally constituted at the time of bidding, the Tender Securing Declaration shall be in the names of all future partners as named in the letter of intent.

Signed:……..……..….. Capacity / title (director

or partner or sole proprietor, etc.) ……..…….....……. Name:

…….. Duly authorized to sign the bid

for and on behalf of: *[insert complete name of Tenderer]*

Dated on ……. day of ……..……. *[Insert date of signing]* Seal or stamp

Appendix to Tender

Schedule of Currency requirements

Summary of currencies of the Tender for_____*[insert name of Section of the Works]*

Name of currency	***Amounts payable***
Local currency: _____	
Foreign currency #1: _____	
Foreign currency #2: _____	
Foreign currency #3: _____	
Provisional sums expressed in local currency _____	[To be entered by the Procuring Entity]

PART II - WORK REQUIREMENTS

SPECIFICATIONS AND DRAWINGS

SECTION V - DRAWINGS

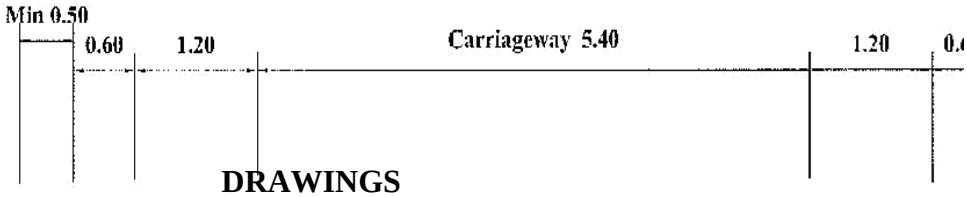

DRAWINGS

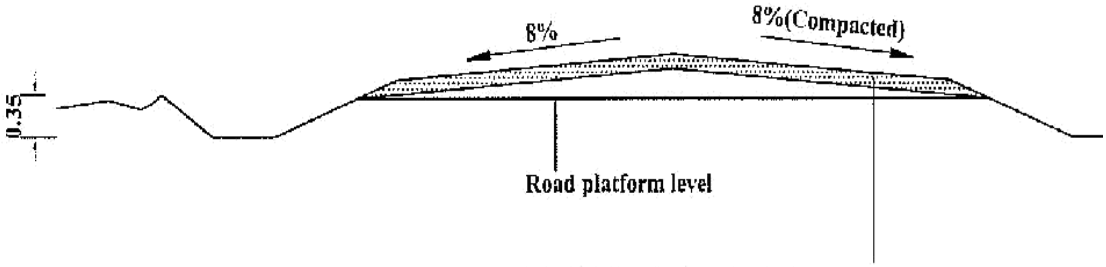

Gravel Layer 0.12 compacted
(0.15 on special sections).

Notes:
1.All dimensions in metres
2.Traffic levels of > 200vpd may justify a carriageway width of 6.0m
3.Gravel thickness may be increased as directed by the Engineer

C1

C-2

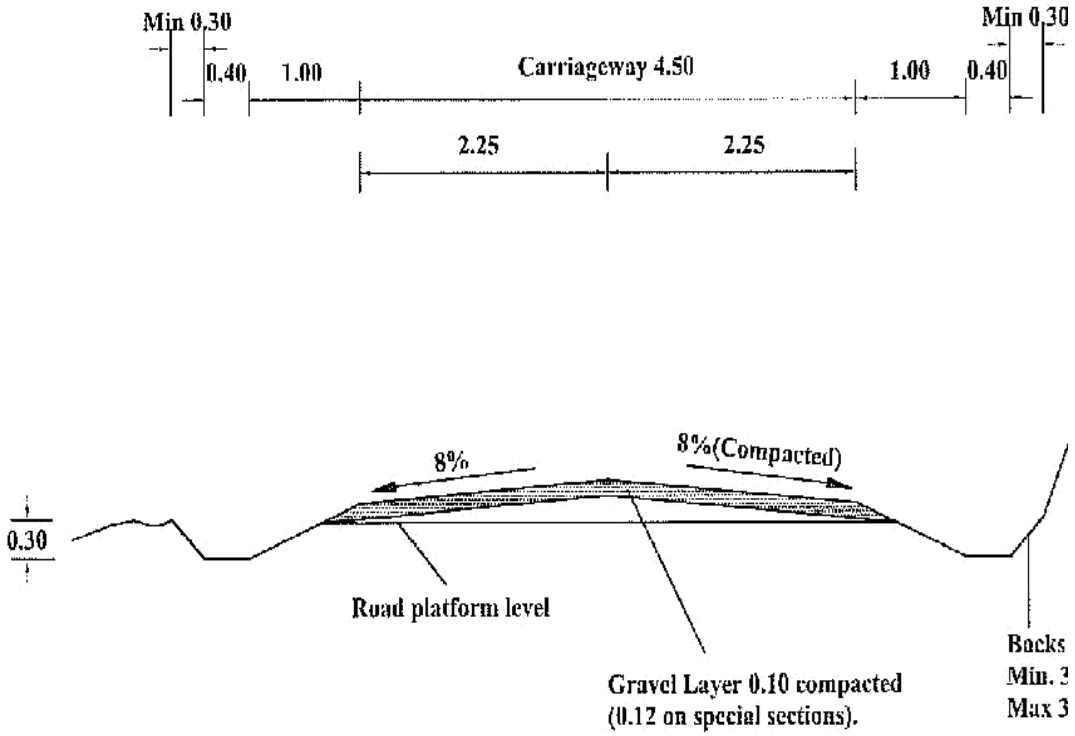

Notes:
1.All dimensions in metres
2.Gravel thickness may be increased as directed by the Engineer

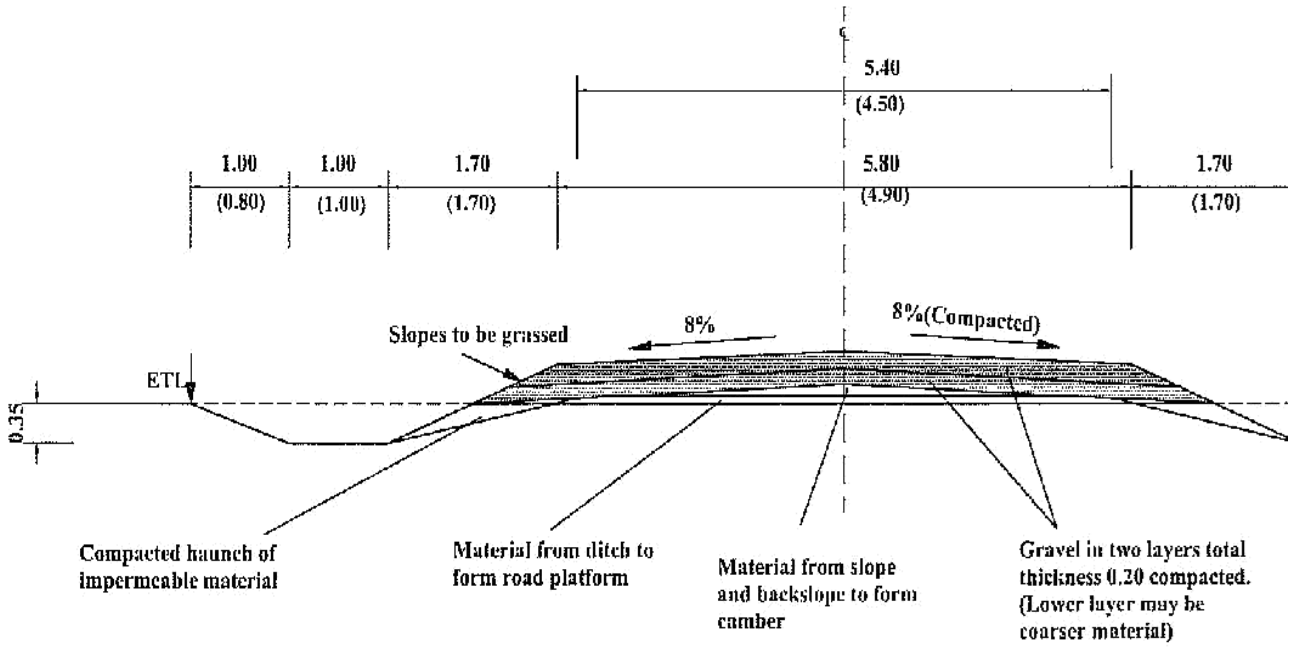
5.40
(4.50)
1.00
(0.80)
1.00
(1.00)
1.70
(1.70)
5.80
(4.90)
1.70
(1.70)
Slopes to be grassed
8%
8%(Compacted)
ETL
0.35
Compacted haunch of impermeable material
Material from ditch to form road platform
Material from slope and backslope to form camber
Gravel in two layers total thickness 0.20 compacted. (Lower layer may be coarser material)

C-3

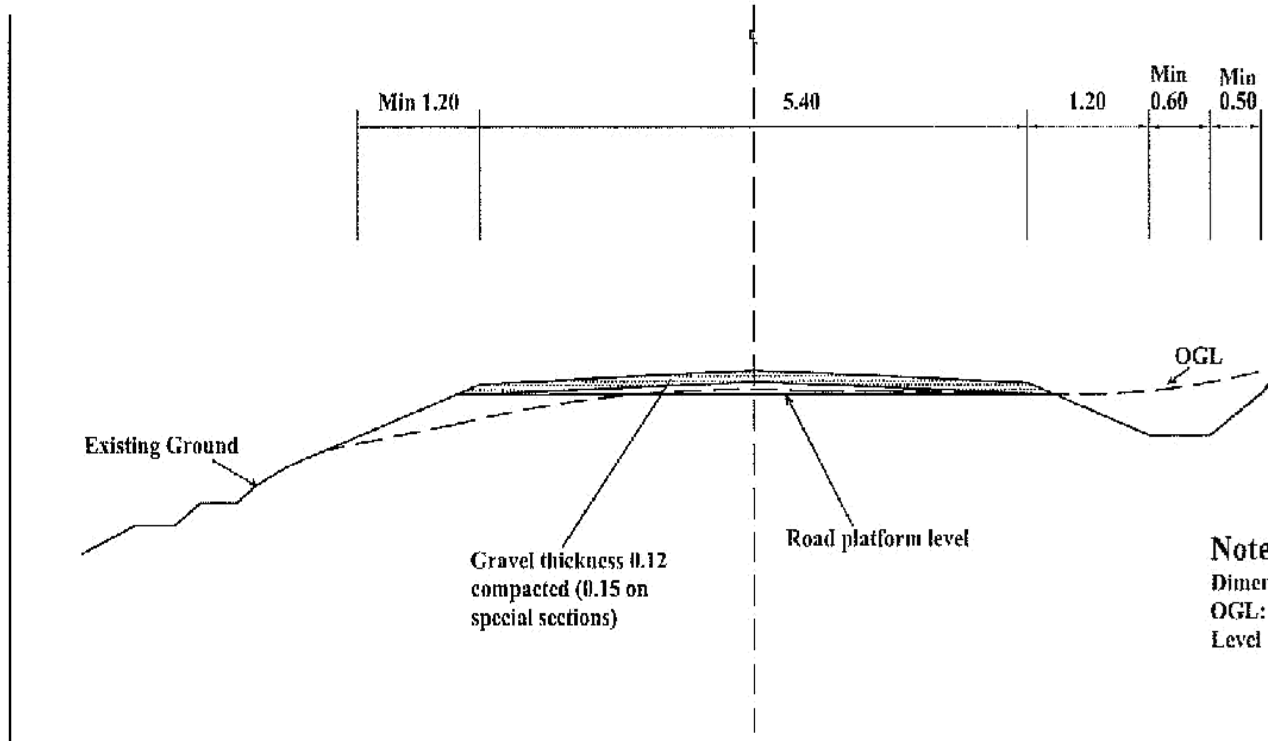
Min 1.20
5.40
1.20
Min 0.60
Min 0.50
OGL
Existing Ground
Gravel thickness 0.12 compacted (0.15 on special sections)
Road platform level
Note
Dimer
OGL:
Level

C-4

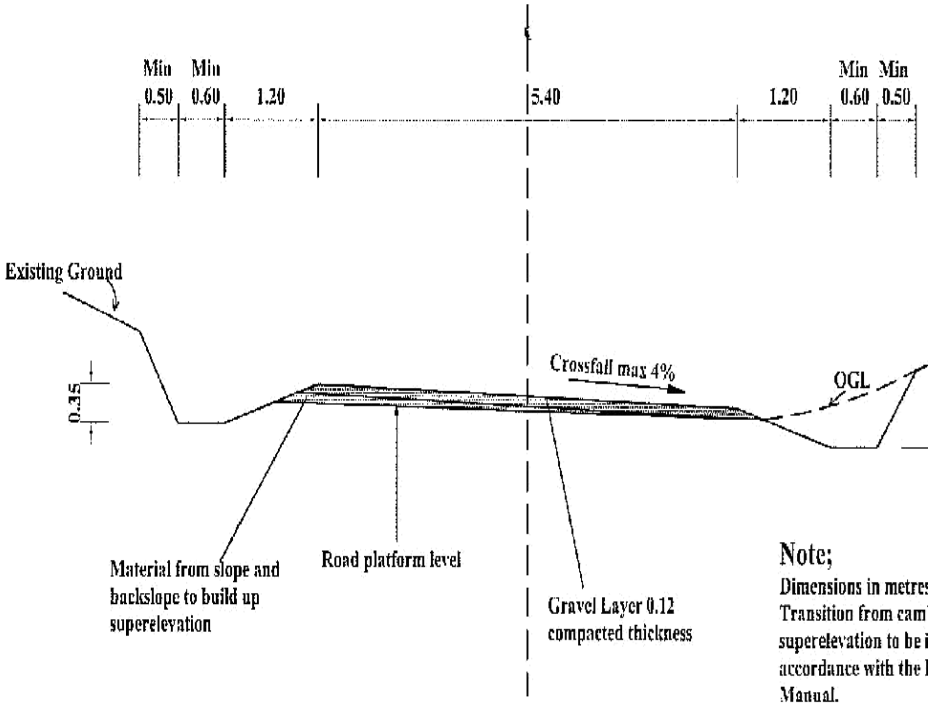

Note;
Dimensions in metres
Transition from cam
superelevation to be i
accordance with the l
Manual.
OGL Original Groun

C-6

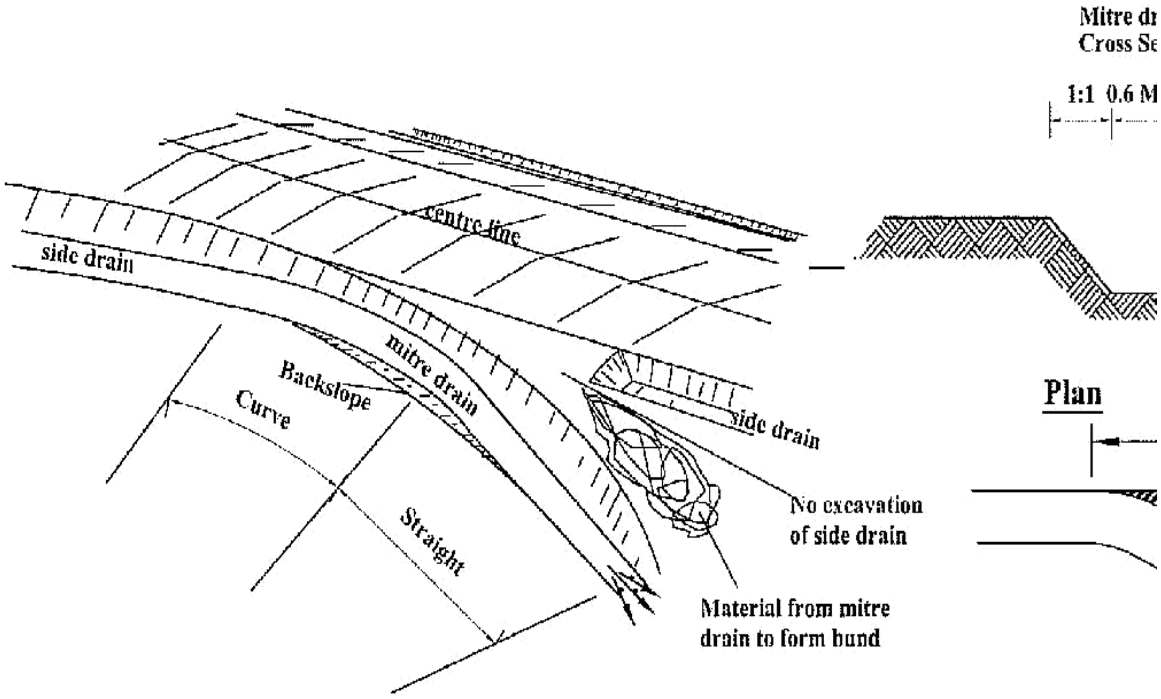

Notes

Location,direction and length of th
by the Engineer

Scour checks made of wooden stakes

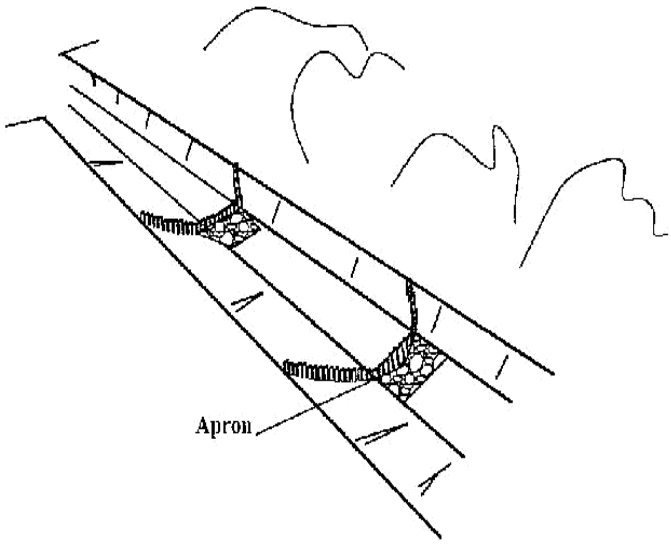

Scour checks made of stones

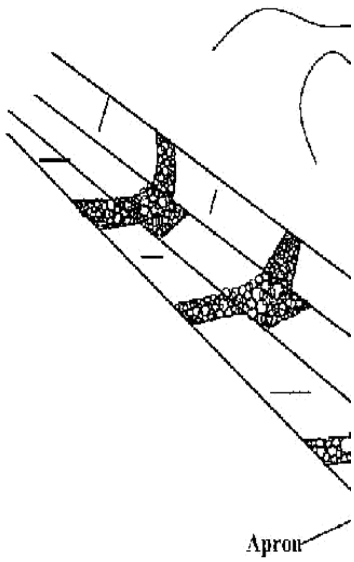

C-8

Scour checks made of stones

Cross section

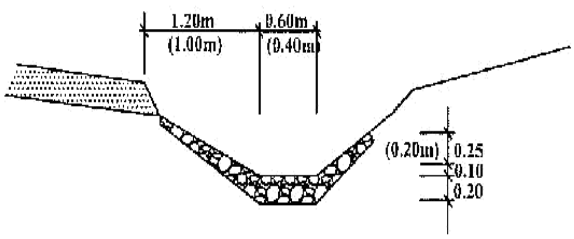

Ground plan

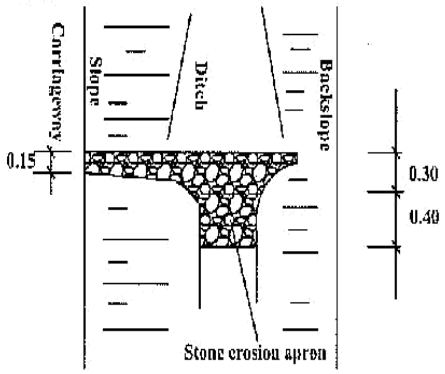

NOTE
1.Dimensions in metres

Scour checks mad

Cross section

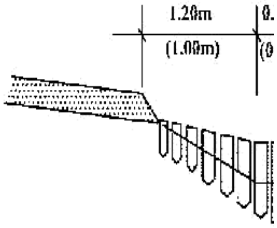

Ground plan

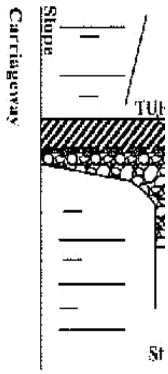

STONE WEIGHT:MIN 10KG
STAKE DIAMETER: MIN. 0.1(

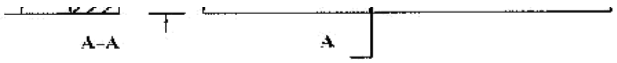

Note
1.Dimensions in mm

SECTION OF MASONRY SCOUR CHECK

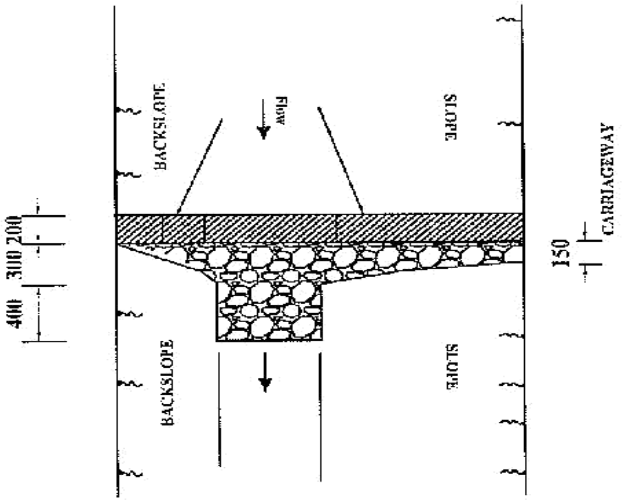

PLAN OF DRAIN WITH SCOUR CHECK

Cruss-Section	Sizes in mm			Excav (m3)	Concrete (m3)	Apron stone pitching (m3)
	Length	Width	Depth			
A	2400	200	550	0.22	0.25	0.18
B	2000	200	500	0.18	0.2	0.14

SECTION OF CONCRETE SCOUR CHECK

NOTE
1.Dimensions in mm

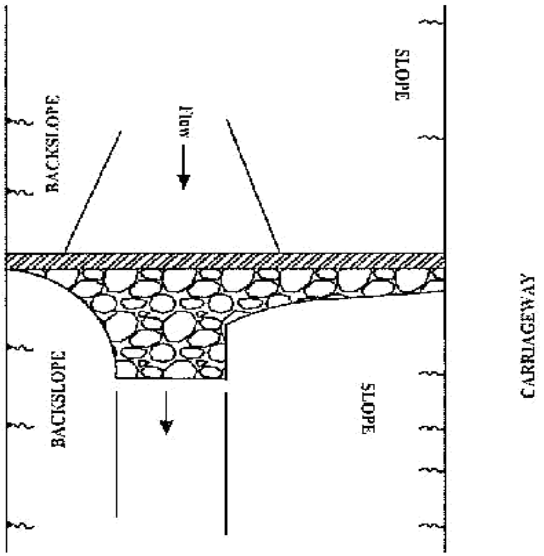

PLAN OF DRAIN WITH SCOUR CHECK

Cross-Section	Sizes in mm			Excav (m3)	Concrete (m3)	Apron stone pitching (m3)
	Length	Width	Depth			
A	2400	100	550	0.13	0.15	0.18
B	2000	100	500	0.10	0.09	0.14

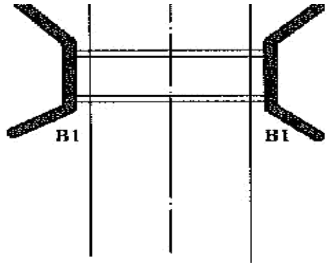

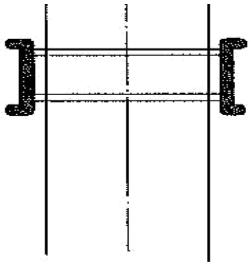

TYPE 2(ENTRY ONLY)

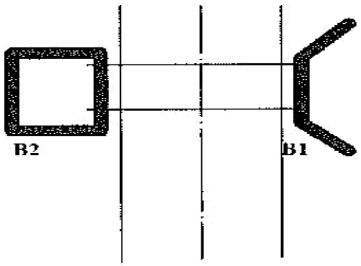

TYPE 4(ENTRY AND EXIT ON ACCESS)

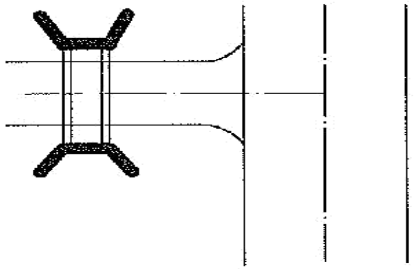

NOTE

1. The code numbers specify the shape and function and the code letter denotes the material:

A =Concrete block
B =Stone masonry
C =Concrete

C-11

SECTION A-A

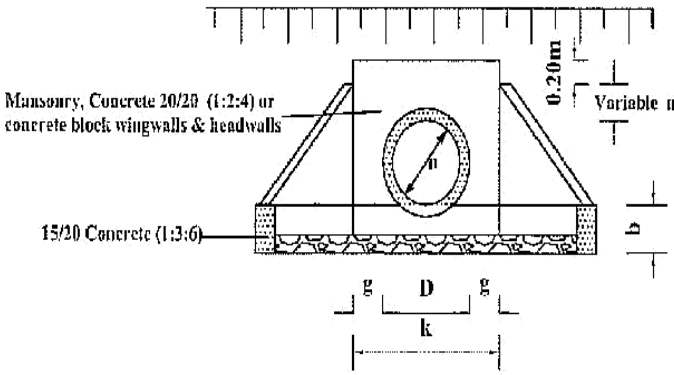

SECTION B-B

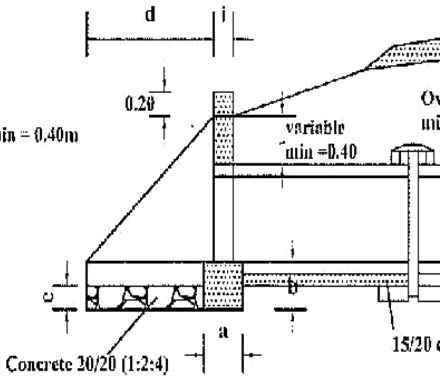

PLAN

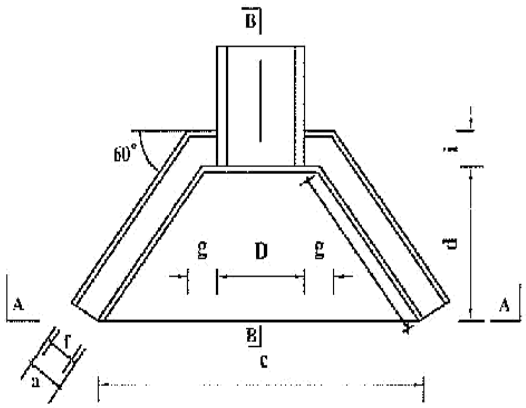

CULVERT TYPES	
X-SECTION WIDTH m	No. of pipes
4.50	6
5.50	7
6.50	8

PIPE DIAMETER IN M		TYPE A and C CONCRETE BL	
		450	600
DIMENSION	UNIT		
a FOUNDATION	m	0.30	0.30
b FOUNDATION	m	0.30	0.30
c FOUNDATION	m	2.20	2.35
d APRON	m	1.00	1.00
e APRON	m	0.20	0.20
f WALL	m	0.20	0.20
g WALL	m	0.30	0.30
h WALL	m	1.15	1.15
i WALL	m	0.20	0.20
k APRON	m	1.05	1.20
MATERIAL REQUIREMENT			
FOUNDATION (concrete)	m3	0.30	0.32
HEAD/WINGWALLS (Conrete/Masonry)	m3	0.42	0.49
APRON (concrete)	m3	0.33	0.36

C-12

SECTION A-A

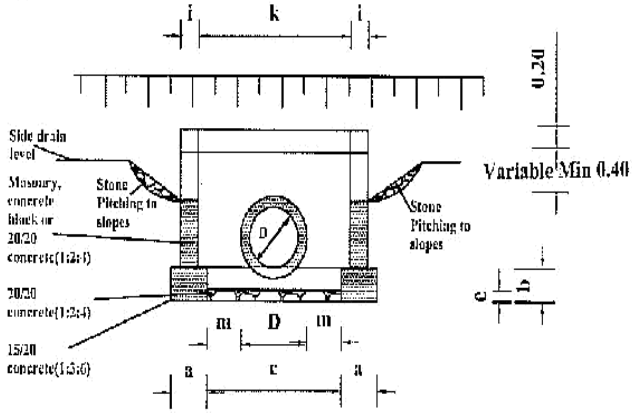

SECTION B-B

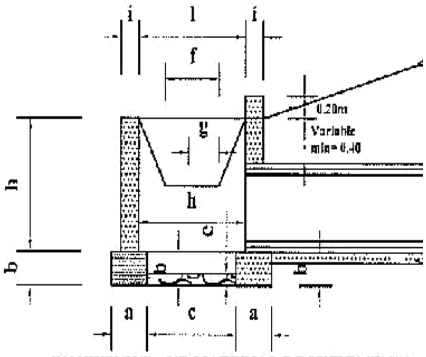

DIMENSIONS AND MATERIAL REQUIREMENTS

PIPE DIAMETER IN (M)		TYPE A CONCRETE BLOCKS			TY M.
		450	600	900	45
DIMENSION	UNIT				
a FOUNDATION	m	0.30	0.30	0.30	0.4
b FOUNDATION	m	0.30	0.30	0.30	0.3
c FOUNDATION	m	1.10	1.10	1.40	1.2
d APRON	m	0.90	0.90	0.90	1.0
e APRON	m	0.20	0.20	0.20	0.2
f DROP INLET	m	0.60	0.60	0.60	0.6
g DROP INLET	m	0.30	0.40	0.60	0.3
h DROP INLET	m	0.60	0.80	1.20	0.6
i DROP INLET	m	0.20	0.20	0.20	0.4
k DROP INLET	m	1.20	1.20	1.50	1.2
l DROP INLET	m	1.00	1.00	1.00	1.0
m DROP INLET	m	0.38	0.30	0.30	0.3
MATERIAL REQUIREMENT					
FOUNDATION (concrete)	m3	0.47	0.47	0.52	0.7
HEAD/WINGWALLS (Concrete/Masonry)	m3	0.56	0.72	1.15	1.2
APRON (concrete)	m3	0.24	0.24	0.30	0.2

PLAN

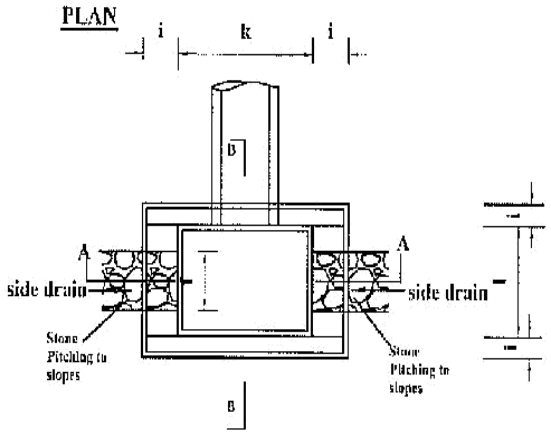

C-13

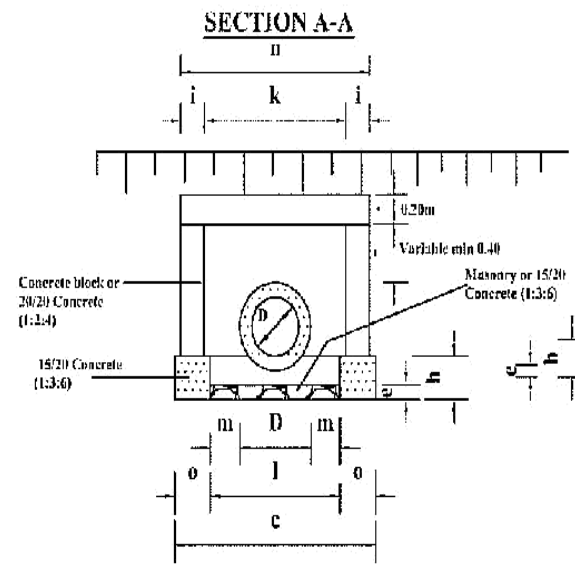

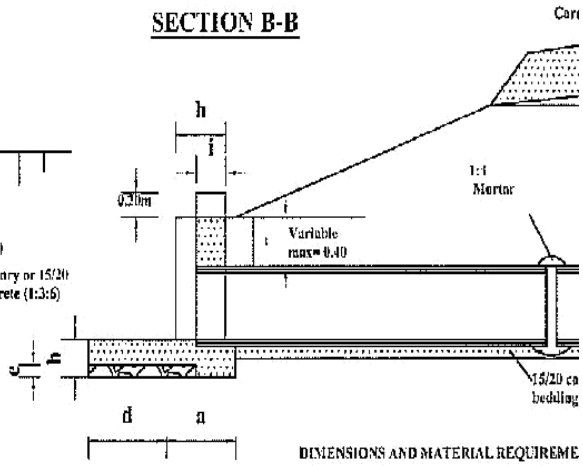

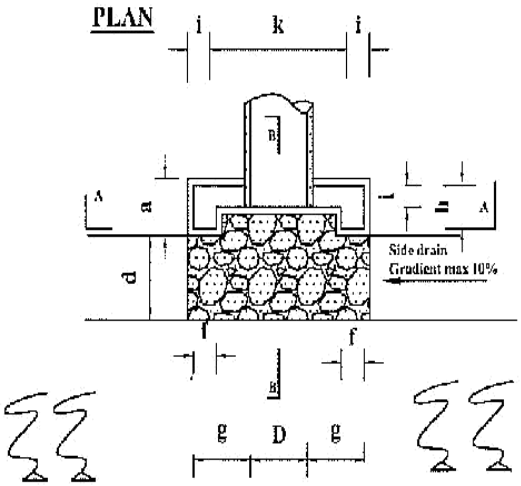

DIMENSIONS AND MATERIAL REQUIREME

PIPE DIAMETER IN (M)			TYPE A and C C BLOCKS	
			450	600
	DIMENSION	UNIT		
a	FOUNDATION	m	0.50	0.50
b	FOUNDATION	m	0.30	0.30
c	FOUNDATION	m	1.55	1.70
d	APRON	m	0.60	0.60
e	APRON	m	0.20	0.20
f	HEADWALL	m	0.20	0.20
g	HEADWALL	m	0.50	0.50
h	HEADWALL	m	0.50	0.50
i	HEADWALL	m	0.50	0.50
k	HEADWALL	m	0.50	0.50
l	FOUNDATION	m	0.50	0.50
m	FOUNDATION	m	0.50	0.50
n	HEADWALL	m	0.50	0.50
o	FOUNDATION	m	0.50	0.50
MATERIAL REQUIREMENT				
	FOUNDATION (concrete)		0.23	0.19
	HEADWINGWALLS (Concrete/Masonary)		0.34	0.37
	APRON (concrete)		0.95	0.99

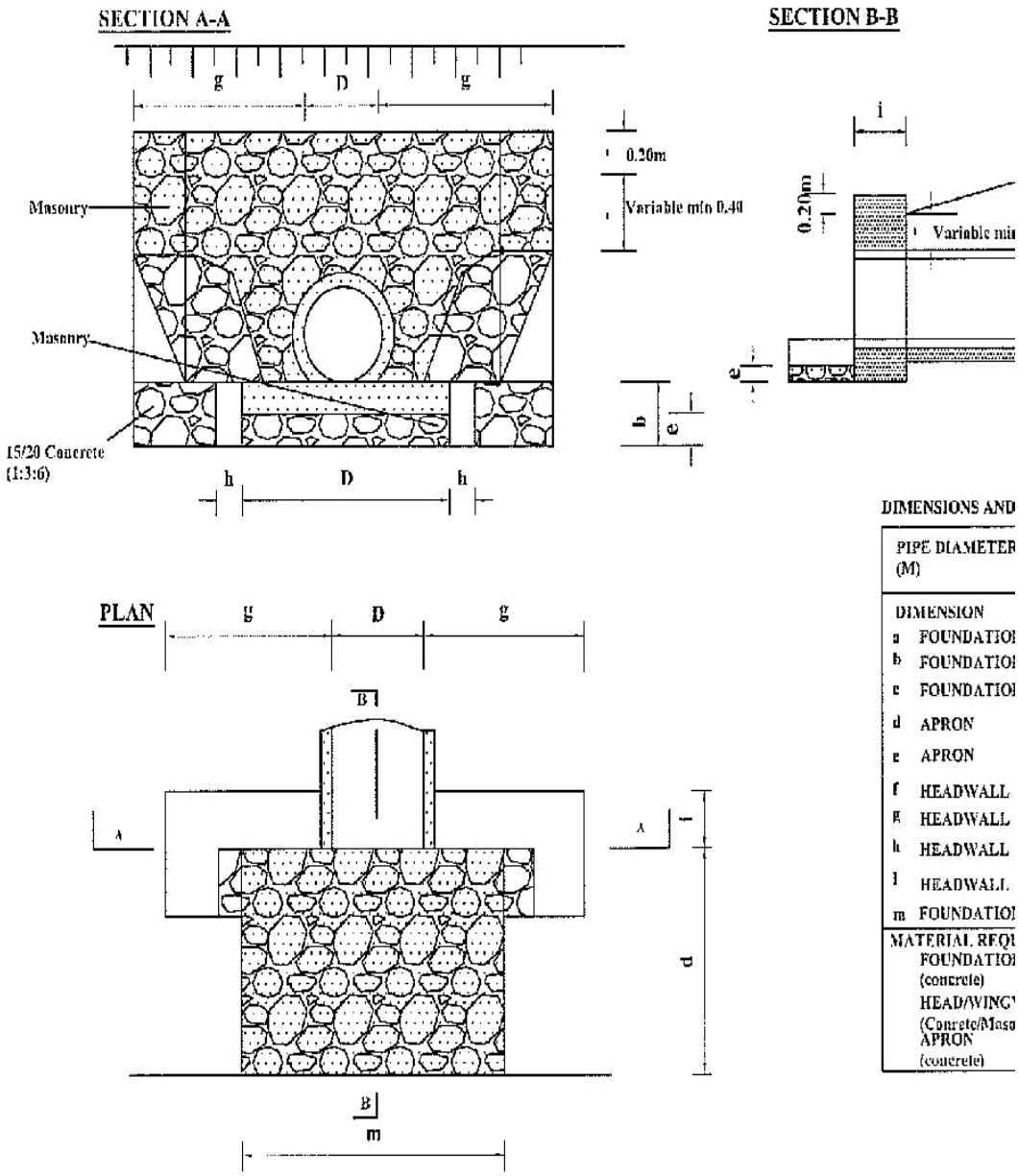
SECTION A-A
g
D
g
0.20m
Variable min 0.40
Masonry
Masonry
15/20 Concrete
(1:3:6)
h
D
h
b
e
SECTION B-B
i
0.20m
Variable mi
e
PLAN
g
D
g
B
A
A
l
d
B
m
DIMENSIONS AND
PIPE DIAMETER
(M)
DIMENSION
a FOUNDATIO
b FOUNDATIO
c FOUNDATIO
d APRON
e APRON
f HEADWALL
g HEADWALL
h HEADWALL
l HEADWALL
m FOUNDATIO
MATERIAL REQ
FOUNDATIO
(concrete)
HEAD/WING
(Concrete/Maso
APRON
(concrete)

SECTION A-A

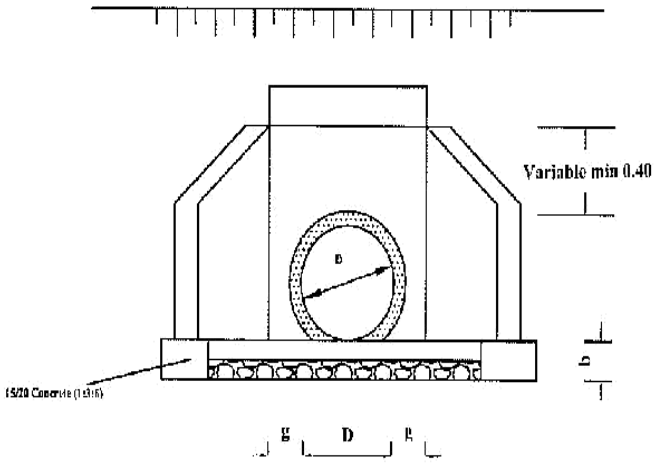

SECTION B-B

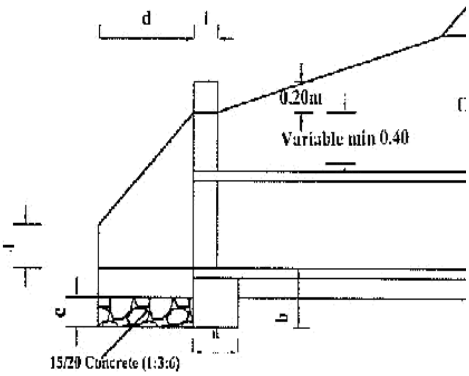

PLAN

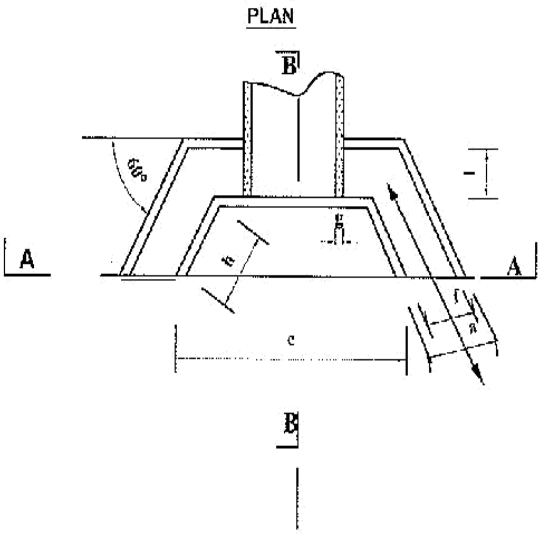

DIMENSIONS AND MATERIAL REQUIREMENTS

	PIPE DIAMETER IN (M)		TYPE A (CONCRETE BLOCKS)		
			450	600	900
	DIMENSION	UNIT			
a	FOUNDATION	m	0.30	0.30	
b	FOUNDATION	m	0.30	0.30	
c	APRON	m	1.34	1.49	
d	APRON	m	0.60	0.60	
e	APRON	m	0.20	0.20	
f	WINGWALLS	m	0.20	0.20	
g	WINGWALLS	m	0.10	0.10	
h	HEADWALLS	m	0.69	0.69	
j	HEADWALLS	m	0.20	0.20	
k	HEADWALLS	m	0.65	0.80	
l	HEADWALLS	m	0.40	0.40	
MATERIAL REQUIREMENT					
	FOUNDATION (concrete [illegible])		0.18	0.20	
	HEAD/WINGWALLS (Conrete/Masonry)		0.28	0.32	
	APRON (cocrete)		0.12	0.14	

C-15

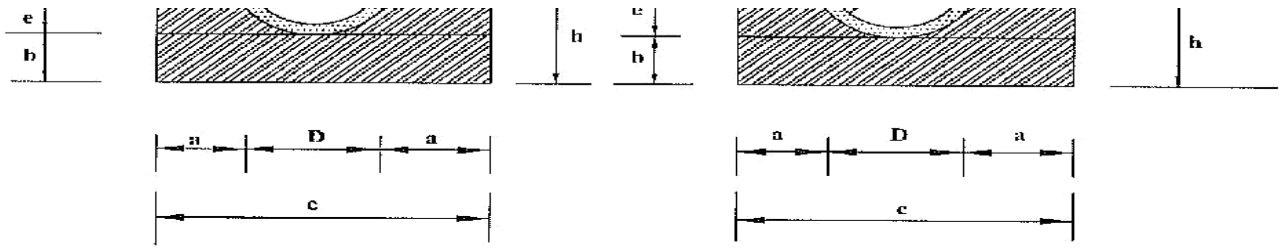

Diameter (D)	450 (mm)	600 (mm)	900 (mm)
a	0.15	0.20	0.20
b	0.10	0.15	0.15
c	0.86	1.12	1.48
d	0.56	0.72	1.08
e	0.14	0.18	0.27
f(min)	0.34	0.45	0.68
g	-	-	-
h	0.24	0.33	0.42
i	-	-	-
Concrete	Volume in (m3/m)		
Class 15/20	0.24	0.24	0.24
Application	-Fair subgrade condition -Overfill > 75% of the pipe diameter -Seasonal water flow only		
Remarks	Material for back/overfill shall be approved by the Engineer		

450 (mm)	600 (mm)	900 (mm)
0.15	0.20	0.20
0.10	0.15	0.15
0.86	1.12	1.48
0.56	0.72	1.08
0.28	0.36	0.54
0.34	0.45	0.68
-	-	-
0.38	0.51	0.69
-	-	-
Volume in (m3/m)		
0.20	0.37	0.56
-Fair to poor subgrade condition -Overfill > 75% of the pipe diameter -Seasonal water flow only		
Material for back/overfill shall be approved by the Engineer		

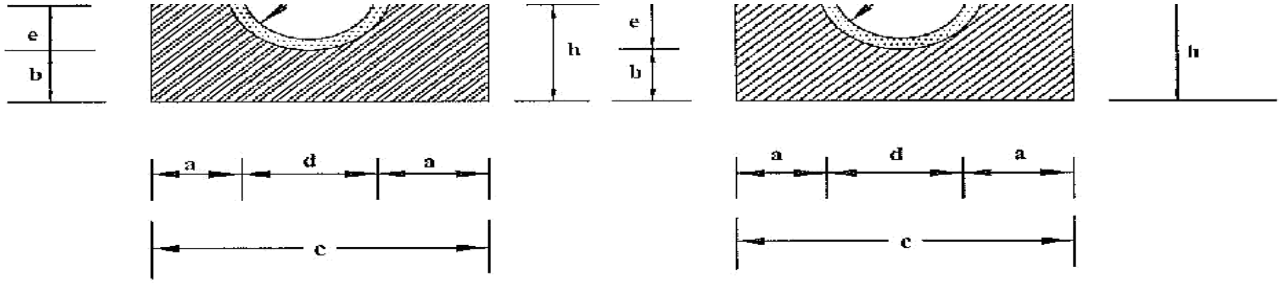

Diameter (D)	450 (mm)	600 (mm)	900 (mm)
a	0.15	0.20	0.20
b	0.10	0.15	0.15
c	0.86	1.12	1.48
d	0.56	0.72	1.08
e	0.42	0.54	0.81
f(min)	0.23	0.3	0.45
g	-	-	-
h	0.52	0.69	0.96
i	-	-	-
Concrete	Volume in (m3/m)		
Class 15/20	0.26	0.47	0.71
Application	-Fair subgrade condition -Overfill > 75% of the pipe diameter -Seasonal water flow only		
Remarks	Material for back/overfill shall be approved by the Engineer		

450 (mm)	600 (mm)	900 (mm)
0.15	0.20	0.20
0.10	0.15	0.15
0.86	1.12	1.48
0.56	0.72	1.08
0.46	0.52	0.78
0.15	0.15	0.15
0.15	0.15	0.15
0.81	1.02	1.38
0.28	0.35	0.45
Volume in (m3/m)		
0.37	0.61	0.92
-Fair to poor subgrade condition -Overfill > 75% of the pipe diameter -Seasonal water flow only		
Material for back/overfill shall be approved by the Engineer		

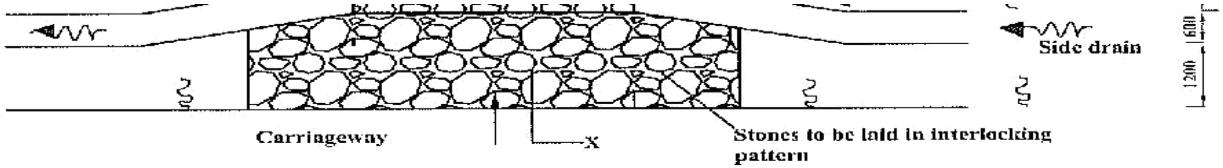

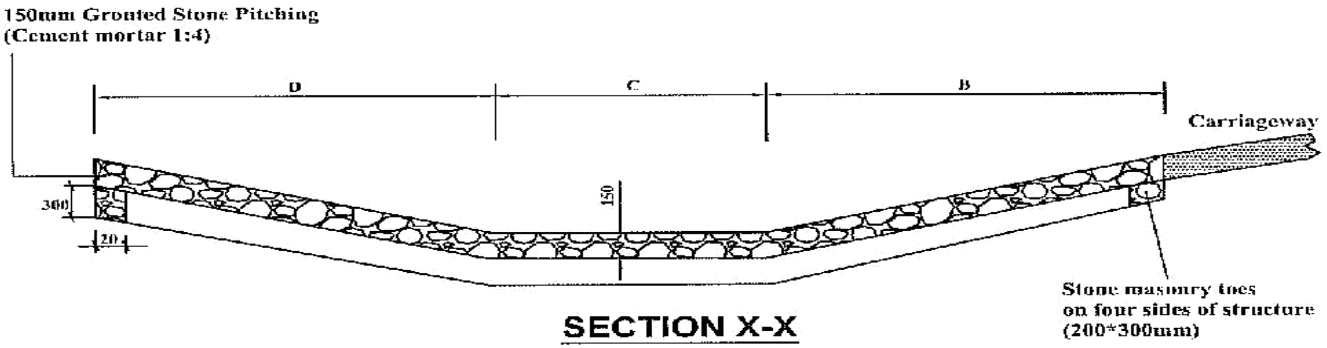

SECTION X-X

QUANTITIES TABLE								
Cross section	DIMENSONS					Excavation(m3)	Stone masonry (m3)	150mm Grouted stone pitching(m3)
	A	B	C	D	E			
A	4000	1800	600	1800	4200	7.5	1.30	21.75
	6000	1800	600	1800	4200	10.00	1.60	30.15
B	4000	1400	400	1800	3600	7.00	1.20	18.30
	6000	1400	400	1800	3600	9.00	1.50	25.50

C-19

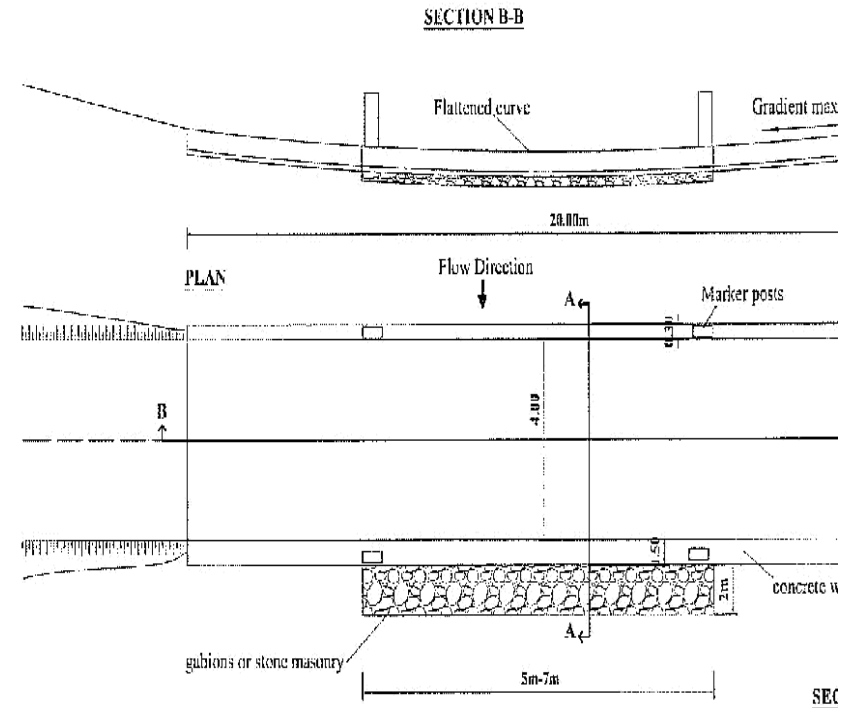

Material : All concrete Class 20/20 (1:2:4)

1 Concrete wall : 10m³
2 Concrete slab: 24m³ or stone masonry
3 Concrete toe : 8m³ or stone masonry
4 Gabions / mattress rock fill: 4.3m³ or stone masonry
5 Gabions /mattress: 36m²
6 Marker posts - precast concrete: 4 no.
7 Excavation (slab + toes + gabions) 54.2m³

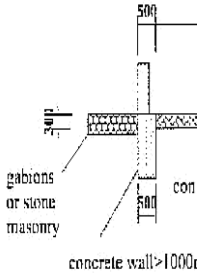

SECTION A-A

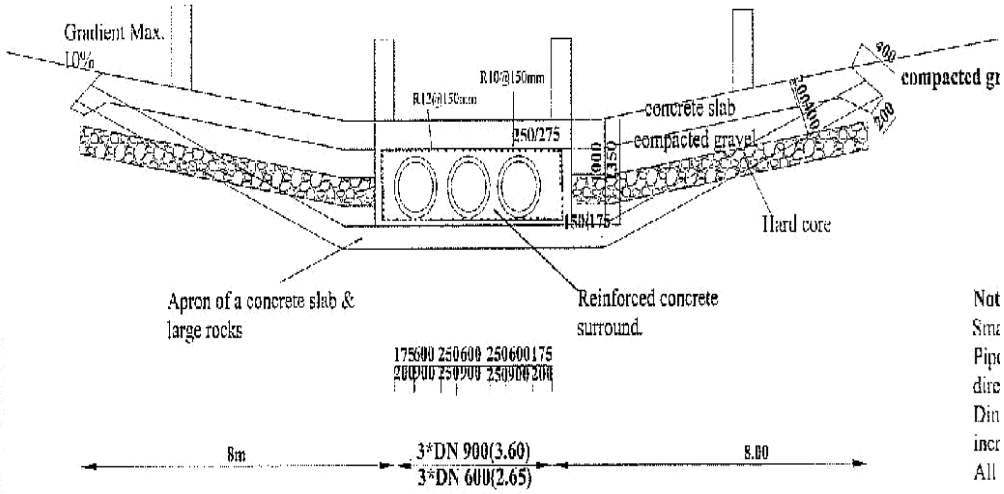

PLAN

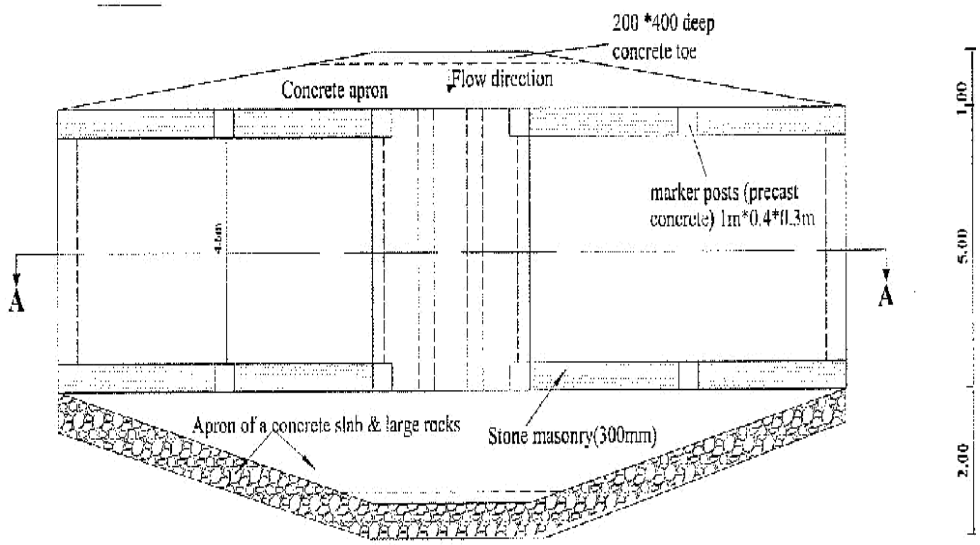

C-20

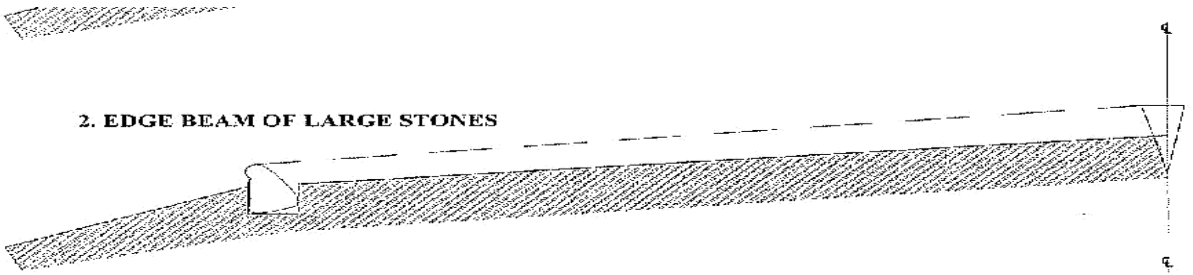

2. EDGE BEAM OF LARGE STONES

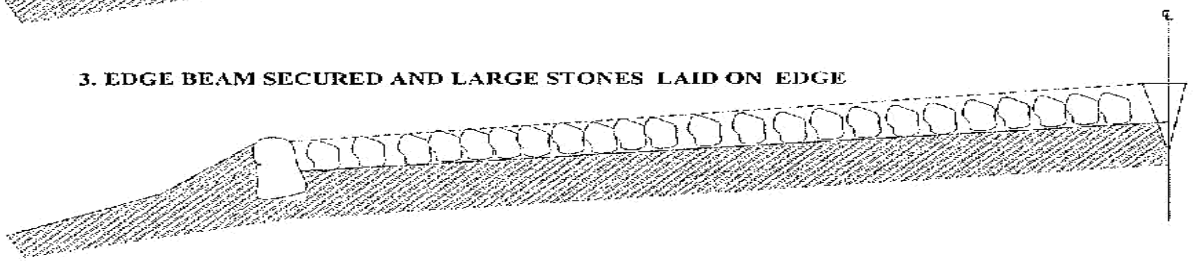

3. EDGE BEAM SECURED AND LARGE STONES LAID ON EDGE

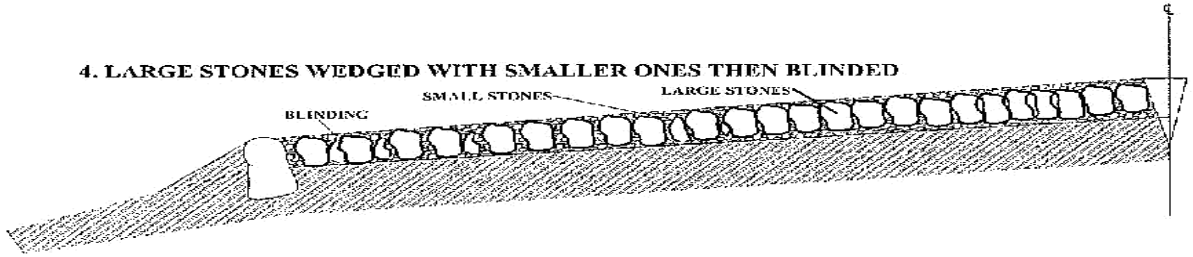

4. LARGE STONES WEDGED WITH SMALLER ONES THEN BLINDED

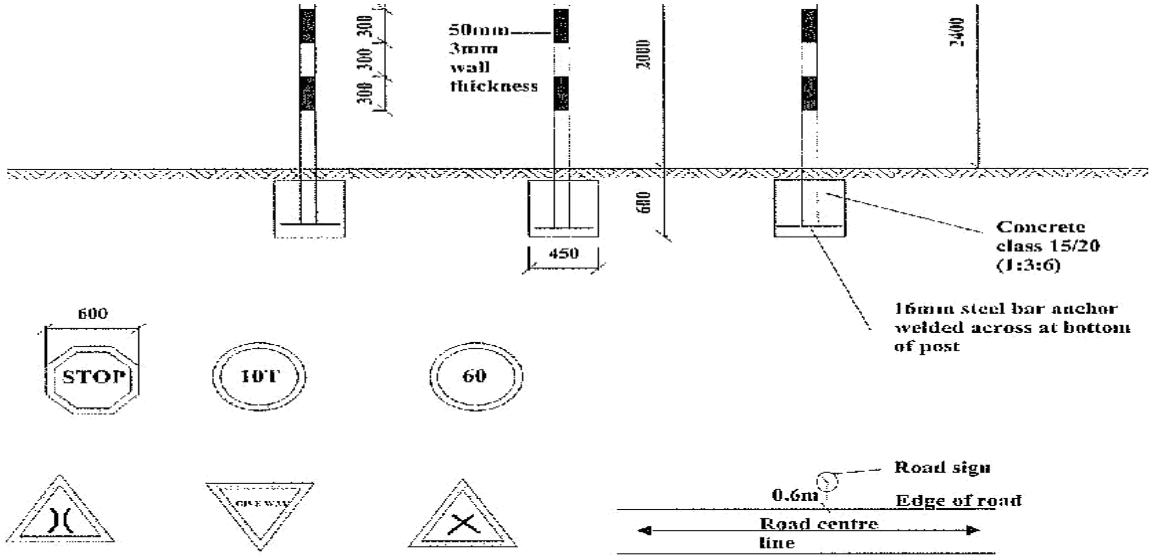

1. The type of sign required and their location shall be as shown on the Road Plan or as directed by the Engineer.
2. Sign plate to be 2mm thick mild steel plate
3. Sign post to be 50mm fixing clamps/brackets.
4. Sign plate to be fixed to steel tube by 8 Nos M10 bolts and 50mm fixing clamps/brackets.
5. Sign paints shall be reflective.
6. The sign plate and post shall be treated by applying two coats of lead red oxide paint before applying a priming and two finish coats of approved paints. Paints used shall have a hard, durable and glossy finish.

EMPLOYER:	KENYA RURAL ROADS AUTHORITY
PROJECT TITLE:	**MAINTENANCE OF ROAD**
FINANCED BY:	**ROAD MAINTENANCE LEVY FUND THROUGH KeRRA**
OVERALL RESPOSIBILITY	**DIRECTOR GENERAL (KeRRA) P.O.BOX 48151 - 00100, Nairobi, Kenya.**
SUPERVISION:	**DEPUTY DIRECTOR ROADS KITUI REGION P.O.BOX 41- 90200, Kitui.**
MAIN CONTRACTOR:	

STOP HIV/AIDS

1. Plain Sheet Should Be Gauge 14 (1.2*2.4m).
2. Standing Should Be Round Hollow Pipe of 62.5mm (2.5inches) Diameter.
3. Height of The Standing Pipe Should Be 6m from the ground level.
4. Publicity Sticker (1.2*2.4m) Should Be on Both Sides of The Plain Sheet.

SECTION VI - SPECIFICATIONS

STANDARD SPECIFICATIONS ..... ERROR! BOOKMARK NOT DEFINED.

BILL 01: PRELIMINARY AND GENERAL ITEMS **63**

01-50- 001 **MOBILIZATION AND ESTABLISHMENT OF THE SITE** 63
01-60- 001 **CONTRACT SUPERVISION** 64
01-60- 002 **CLEARANCE ON COMPLETION** 64
01-60-003 **INSURANCE** 64
01-60-004 **QUALITY CONTROL TESTS** 64
01-60-005 **PUBLICITY SIGN BOARDS** 65
01-60- 006 **DRINKING WATER** 65
01-60-007 **PROVISION OF SITE SANITATION FACILITIES** 65

BILL 03: SETTING OUT **66**

03-50-001: **SETTING OUT THE HORIZONTAL ALIGNMENT** 66

BILL 04: SITE CLEARANCE **66**

04-50-002 **GRASS CUTTING** 67
04-50-003 **BUSH CLEARING (HEAVY)** 68
04-50-004 **BUSH CLEARING (LIGHT)** 68
04-50-005 **PRUNING TREE BRANCHES** 68
04-50-006 **TREES AND STUMPS REMOVAL (200-450MM GIRTH)** 69
04-50-007 **TREES AND STUMP REMOVAL (>450MM GIRTH)** 69
04-50-008 **CLEARING OBSTRUCTIONS – BOULDERS AND DEBRIS REMOVAL** 70
04-50-009 **STRIPPING AND GRUBBING** 70
04-50-010 **EXCAVATE, REMOVE AND DISPOSAL OF CONCRETE STRUCTURES** 71

BILL 05: EARTHWORKS **71**

05-50-001: **ESTABLISHMENT OF THE VERTICAL ALIGNMENT - SLOTTING** 71
05-50-002: **EXCAVATION, SPREAD AND COMPACT IN SOFT MATERIAL (SIDE DRAINS)** 72
05-50-003 **EXCAVATION, SPREAD AND COMPACT IN HARD MATERIAL (SIDE DRAINS)** 73
05-50-004 **EXCAVATION TO LEVEL AND COMPACTION** 73
05-50-005 **SPREADING AND COMPACTION FOR CAMBER FORMATION** 74
05-50-006 **FILL IN SOFT MATERIAL AND COMPACT.** 75
05-50-007 **FILL IN HARD MATERIAL AND COMPACT.** 75
05-50-008 **CUT TO SPOIL IN SOFT MATERIAL.** 75
05-50-009 **CUT TO SPOIL IN HARD MATERIAL.** 75
05-50-010 **CUT TO FILL IN SOFT MATERIAL.** 75
05-50-011 **CUT TO FILL IN HARD MATERIAL.** 75
05-50-012 **ROCK TO FILL TO SWAMP** 75
05-50-013 **FILTER TO SWAMP UNDER, OVER AND AROUND ROCK FILL** 75
05-50-014 **GRASSING** 75
05-50-015 **BACK SLOPE / SLOPE MAINTENANCE** 75

BILL 07: EXCAVATION AND FILLING FOR STRUCTURES **76**

07-50-001 **EXCAVATION FOR DRAINAGE STRUCTURES – SOFT MATERIAL** 76
07-50-002 **EXCAVATION FOR DRAINAGE STRUCTURES – HARD MATERIAL** 76
07-50-003 **RIVER TRAINING IN SOFT MATERIAL** 77
07-50-004 **RIVER DIVERSION** 77
07-50-005 **POROUS FILTER MATERIAL** 77
07-50-006 **SELECTED GRANULAR FILL MATERIAL** 77
07-50-007 **CUT TO FILL IN SOFT MATERIAL** 77

BILL 08: CULVERT AND DRAINAGE WORKS **77**

08-50-002: **DITCH CLEANING** 77
08-50-003: **DITCH WORKS EARTH FILLS** 78
08-50-004: **DITCH WORKS ROCK FILLS. SUPPLY AND FILL** 79
08-50-005: **DITCH/MITRE DRAINS/CATCH WATER DRAINS** 79
08-60-001/005: **CULVERT CLEANING (PARTIALLY BLOCKED)** 80
08-60-001 **300MM DIA** 80
08-60-002 **450MM DIA** 80
08-60-003 **600MM DIA** 80
08-60-004 **900MM DIA** 80
08-60-005 **1200 MM DIA** 80
08-60-006/7/8/9/10: **CULVERT CLEANING (FULLY BLOCKED):** 81

08 - 60 - 006 300MM DIA; 81
08 - 60 - 007 450MM DIA; 81
08 - 60 - 008 600MM DIA; 81
08 - 60 - 009 900MM DIA; 81
08 - 60 - 010 1200MM DIA 81
08-60-011/015 CONCRETE CULVERT REPAIR / REPLACEMENT – RINGS 81
08-60-11 300 MM 81
08-60-12 450 MM 81
08-60-13 600 MM 81
08-60-14 900 MM 81
08-60-15 1200 MM 81
08-60-021/029 SUPPLY AND INSTALLATION OF CONCRETE PIPE CULVERTS 82
08-60-016 300 MM UNHAUNCHED 82
08-60-021 300 MM SURROUNDS 82
08-60-022 450 MM UNHAUNCHED 82
08-60-023 450 MM SURROUNDS 82
08-60-024 600 MM UNHAUNCHED 82
08-60-025 600 MM SURROUNDS 82
08-60-026 900 MM UNHAUNCHED 82
08-60-027 900 MM SURROUNDS 82
08-60-028 1200 MM UNHAUNCHED 82
08-60-029 1200 MM SURROUNDS 82
08- 60-017 HEAD WALL REPAIR - MASONRY 83
08-60-018 HEADWALL REPAIR - CONCRETE 84
08-60-019 HEADWALL CONSTRUCTION - MASONRY 84
08-60-020 HEADWALL CONSTRUCTION – CONCRETE 85
08-60-030 EXCAVATE IN SOFT MATERIAL FOR CULVERTS 85
08-60-031 EXCAVATE IN HARD, MATERIAL FOR CULVERTS 85
08-60-032 PROVIDE, LAY AND JOIN 450MM INNER DIA. CONCRETE PIPES 85
08-60-033 PROVIDE, LAY AND JOIN 600MM INNER DIA. CONCRETE PIPES 85
08-60-034 PROVIDE, LAY AND JOIN 900MM INNER DIA. CONCRETE PIPES 85
08-60-035 PROVIDE, COMPACT CLASS 15/20 CONCRETE 85
08-60-036 PROVIDE, COMPACT CLASS 20/25 CONCRETE 85
08-60-037 PROVIDE AND PLACE A142 FABRIC MESH REINFORCEMENT 85
08-60-038 SELECTED BACKFILL MATERIALS 85
08-70-001: STONE PITCHING 86
08-70-002: STONE PITCHING REPAIR 86
08-70-003: GABION REPAIR 87
08-70-004: GABION INSTALLATION 87
08-70-005: ROCK FILL TO GABIONS 88
08-70-006: CONSTRUCTION OF SCOUR CHECKS (CONCRETE) 88
08-70-007: CONSTRUCTION OF SCOUR CHECKS (MASONRY) 88
08-70-008: CONSTRUCTION OF SCOUR CHECKS (WOODEN STAKES) 88
08-70-009: SCOUR CHECK REPAIR - MASONRY 89
08-70-010: SCOUR CHECK REPAIR - WOODEN 89
08-70-011: SCOUR CHECK REPAIR - CONCRETE 89
08-70-012 AT-LEVEL SCOUR CHECKS 90
08-80-013 GULLY – HEAD PROTECTION - STONE CHUTE STABILISATION 90
08-80-014 GULLY – HEAD PROTECTION - STONE AND POST CHUTE STABILISATION 90
08-80-015 STONE CHECK DAMS 91
08-80-016 STONE AND POST CHECK DAMS 91
08- 080-001 ACCESS DRIFTS (STONE PITCHING) 92

BILL 10: GRADING AND GRAVELLING **92**

10-50-001: HEAVY GRADING WITHOUT WATERING AND COMPACTION. 93
10-50-002: HEAVY GRADING WITH WATERING AND COMPACTION. 94
10-50- 004: CARRIAGEWAY GRADING - LIGHT GRADING 95
10-50-004: LIGHT MANUAL RESHAPING (GRUB EDGE, FILL GULLIES AND RESHAPE CARRIAGEWAY) 95
10-60-001: PROVIDE GRAVEL WEARING COURSE (EXCAVATION, FREE HAUL, SPREADING AND COMPACTION OF GRAVEL) 96
10–60- 002: HAULAGE (OVERHAUL BEYOND 1.5KM) 97
10-60-004 GRAVEL PATCHING (EXCAVATION, FREE HAUL, SPREADING AND COMPACTION OF GRAVEL) 98
10-70-001: SITE CLEARANCE OF BORROW AREA. 99
10-70-002: REMOVAL OF OVERBURDEN 99
10-70-003: RESTORATION OF QUARRIES AND BORROW PITS 100

BILL 17: CONCRETE WORKS **100**

17-50-001: BRIDGE DECK REPLACEMENT - CONCRETE 100
17-50-002: BRIDGE ABUTMENT REPAIR – CONCRETE 100
17-50-003: BRIDGE ABUTMENT REPAIR - MASONRY 101

17-50-004: DRIFT REPAIRS – CONCRETE 101
17-60-001: PROVIDE, PLACE AND COMPACT CLASS 15/20 CONCRETE FOR BLINDING 102
17-60-002: PROVIDE, PLACE AND COMPACT CLASS 25/20 CONCRETE 102
17-60-003: VERTICAL FORMWORK CLASS F2 FINISH 102
17-60-004: HORIZONTAL FORMWORK CLASS F2 FINISH 102
17-60-005: PROVIDE, CUT, BEND AND FIX INTO POSITION HIGH YIELD REINFORCEMENT BAR TO BS 44461 AS DIRECTED AND AS SHOWN ON THE DRAWING 102
17-70-001: DRIFT CONSTRUCTION BY CONTRACT 102
17-70-002: BRIDGE CONSTRUCTION BY CONTRACT 102
17-70-003: CONCRETE ROAD SECTION 102

BILL 20: ROAD FURNITURE 103

20-50-001: ROAD RESERVE BOUNDARY POSTS 103
20-50-002: INSTALLATION OF FENCING AND GATES 103
20-50-003: REPAIR/REPLACE FENCE 103
20-50-005: PERMANENT ROAD SIGNS 103
20-50- 008: GUARDRAIL REPAIR 104
20-50-009: GUARD RAIL REPLACEMENT 104
20-50-010: GUARD RAIL INSTALLATION 104
20-50-011: HANDRAIL REPAIR/INSTALLATION 105
20-60-001: TRAFFIC SIGN MAINTENANCE 105

BILL 22: DAYWORKS 106

BILL 25: HIV/AIDS AWARENESS AND PREVENTION CAMPAIGN 106

25-50-001 HIV / AIDS AWARENESS AND PREVENTION CAMPAIGN 106
25-50-002 SOIL EROSION MITIGATION MEASURES 107

A. Location of Project

The road project is located in KITUI REGION

B. EXTENT OF CONTRACT.

The works to be executed under this Contract comprise the following: -

a) AS IN THE BILLS OF QUANTITIES

C. PROGRAMME OF EXECUTION OF THE WORKS

The Contractor shall provide the works programme, required under the Conditions of Contract, within 21 days of receipt of the Engineer's Order to commence work.

The programme shall be co-ordinated with climatic and other conditions to provide for the completion of the works in the order and by the time specified.

The Contractor shall carry out the contract in accordance with the programme agreed with the Engineer, but he shall in no manner be relieved by the Engineer's approval of the programme, of his obligation to complete the works in the prescribed order and by the prescribed completion date and he shall from time to time review his progress and make such amendments to his rate of execution of the works as may be necessary to fulfil his obligations.

D. ORDER OF EXECUTION OF WORKS

The Contractor shall carry out the Works such that a continuous and consecutive output of fully completed work is achieved.

E. TAKING OVER CERTIFICATE

Taking over certificate shall be issued upon completion of **WORKS**

BILL 01: PRELIMINARY AND GENERAL ITEMS

Scope:

This bill comprises those items that are required at the Commencement and Completion of the Works or that are Provisional Items applicable for the duration of the Works.

01-50- 001 Mobilization and Establishment of the Site

The Contractor shall provide all equipment, tools, materials, temporary offices, stores and housing required to carry out the Works.

The Contractor shall ensure that all possible means of protection are given to the labour force at all times. Such protection shall include provision of high visibility clothing or vests, goggles and masks for workers in potentially dangerous locations or dealing with potentially harmful materials. The Contractor shall also maintain first aid kits with a minimum of the following items:-

- Non-Stick wound dressing
- Selection of plaster/band aids
- Crepe bandages
- Gauze and cotton wool
- Antiseptic solution (washing wounds)

- Antiseptic cream – Betadine, Burnol
- Pain killers Panadol, Disprin
- Anti diarrhoea – Immodium, Diadis, Charcoal
- Anti histamine – Piriton, Triludan
- Anti nausea – Stemetil
- Eye ointment
- Oral re-hydration sachets
- Surgical gloves

Measurement and Payment: NA

01-60- 001 Contract Supervision

Provisional sum available for the Engineer for expenses incurred for supervising the contract such as allowances, casual wages and transportation within the project area.

Measurement and Payment:

Provisional Sum: Payable by the Contractor to the Engineer through certification as directed by the Engineer. No mark up is included in this item.

Work Method: NA

01-60- 002 Clearance on Completion

On Completion of the Works, all temporary housing, equipment, signs and tools shall be removed from the site, and the site left in good order to the satisfaction of the Engineer.

Measurement and Payment

The Lump Sum payment will be made upon approval by the Engineer that the Clearance has been satisfactorily carried out.

Work Method: NA

01-60-003 Insurance

The Contractor shall provide Insurance in accordance with the Conditions of Contract as indicated in the Appendix to form of tender for Rehabilitation and Improvement Contracts and Clause 14.1 for small works conditions of contract.

Measurement and Payment

Lump Sum payment for this item will be made upon the production of satisfactory evidence by the Contractor that Insurances have been affected.

Work Method: NA

01-60-004 Quality Control Tests

The Engineer may instruct the Contractor during the progress of the Works to carry out quality control tests to check materials and standards of workmanship, against the Specifications.

Where such tests indicate defective standards, the Engineer shall instruct the Contractor to rectify the defects to the Engineer’s satisfaction and at the Contractor’s expense.

The Engineer shall include a Provisional Sum for this item to be expended only as and when the Contractor is instructed to carry out tests at approved material testing laboratories.

Measurement and Payment

Reimbursable item based on actual costs incurred by the contractor including sampling, transportation and testing.

Work Method: NA

01-60-005 Publicity Sign Boards

The Contractor shall provide Sign Boards as specified on the Drawings or as directed by the Engineer. The Sign Boards shall be placed at the beginning and end of the road or road bill covered by this Contract.

Sign Boards shall be maintained for the duration of the Works, and removed on completion.

Quality Control

The Engineer shall check that Sign Boards have been erected in accordance with Drawings and Specifications.

Measurement: Number

The unit of measurement shall be number of Sign Boards erected

Payment

The unit rate shall be the full compensation for labour, tools, materials and incidental costs required for carrying out the work.

Work Method: NA

01-60- 006 Drinking Water

The Contractor shall provide safe drinking water on site for workers at a reasonable distance from all work locations, for the duration of the Works.

Quality Control

The Engineer shall check regularly that adequate supplies of water are available throughout the Site.

Measurement and Payment

A Lump Sum shall be paid on a Monthly basis upon the approval of the Engineer that adequate supplies have been provided.

Work Method: **LB**

01-60-007 Provision of site sanitation facilities

The Contractor shall provide sanitation facilities on site for workers at a reasonable distance from all work locations, for the duration of the Works. This can be in the form of shallow pit latrines that are appropriately covered. All shallow pit latrines shall be filled in after the end of use.

Quality Control

The Engineer shall check regularly that adequate sanitation facilities are available throughout the Site.

Measurement and Payment

A Lump Sum shall be paid on a Monthly basis upon the approval of the Engineer that adequate sanitation facilities have been provided.

Work Method: **LB**

BILL 03: SETTING OUT

Scope

This bill covers the activities required in the re-establishment of the horizontal alignment of the road including setting out the centre line, cross section widths, drains and structures.

03-50-001: Setting Out the Horizontal Alignment

The Contractor shall set out the centreline to follow the existing road alignment unless instructed otherwise by the Engineer.

The minimum standards as shown in Table 2.1 shall apply.

Table 2.1 Alignment Standards

Standard	Flat and Rolling Terrain	Hilly Terrain
Horizontal Curves		
Desirable Minimum radius	100m	50m

The cross-section details of the road shall be as shown on the Drawing or as directed by the Engineer. Horizontal setting out shall be done for the approved work sections at a time but not for the entire road.

Work Method: **LB**

Quality Control
Centreline pegs shall be set at 10m intervals on straight sections and 5m on curves
Chainage or reference pegs shall be set out and marked at 20m intervals and located at one metre outside the cleared width and on both sides of the road.
Cross section widths shall be checked at 10m intervals and shall have maximum tolerances of + 25mm

Measurement Unit: m

The measurement shall be the linear metres of the road set out.

Payment:

The unit rate shall be the full compensation for labour, tools, materials and incidental costs required for carrying out the work.

BILL 04: SITE CLEARANCE

Scope

This bill covers the clearance of bushes, shrubs, grasses, trees, stumps, boulders, stripping and grubbing of the topsoil, removal of anthills and other unsuitable materials for the specified widths of the road, quarry and borrow areas. The distinction between light and heavy bush shall be decided by the Engineer.

The minimum site clearing widths for each of the activities shall be as shown in Table 4.1

Table 4.1: Site Clearing Widths

Road Category	*Running Surface*	*Stripping and Grubbing*	*Trees, Stumps, Boulders*	*Bush Clearing*
A/B/C + Secondary Roads	6.0 m	10.6 m	10.6 m	14.0 m
D/E + Minor Roads	5.4 m	10.0 m	10.0 m	13.0 m
RAR Roads	4.5 m	7.9 m	8.0 m	11.0 m
Minor / RAR roads with insufficient widths or Temporary sections	3.5 m	6.9 m	7.0 m	9.0 m

04-50-002 Grass Cutting

Grass shall be defined as any form of plant growth including small shrubs having a girth of not more than 100mm measured at height of 200mm above ground level.

The grass shall be cut to height of not more than 50 mm above the ground. The width limits shall be as instructed by the Engineer. All cut grass shall be removed from the carriageway, side drains, mitre drains and inlets and outlet drains of structures/culverts and deposited in approved spoil dumps

Burning of the grass shall not be allowed and care shall be taken not to damage roadside fixtures such as signs and marker posts.

This activity shall be carried out as either Machine Based (Mechanical Mowing) or as Labour Based as defined in the Bills of Quantity or as instructed by the Engineer.

Grass cutting shall be done off-carriageway and shall not include areas designated for grubbing.

Work Method: **LB or MB**

Quality Control

The road width for grass cutting shall be measured at 50-m intervals and shall be free of grass after the operation.

Measurement: m^2

The measurement shall be area of grass cut, based on the standard width and measured length of clearing.

Payment

The unit rate shall be full compensation, for equipment, labour, materials, tools, and incidental costs required to carry out the work.

04-50-003 Bush Clearing (Heavy)

Where the Engineer designates an area as Heavy Bush (based on the undergrowth density) the Contractor shall clear all vegetation including small trees, shrubs and undergrowth, **and their root systems**, and shall salvage any re-useable timber or other material by cutting into logs and stacking. Other cleared material shall be collected and disposed of off-site as directed by the Engineer.

This activity shall be carried out as either Machine Based or as Labour Based as defined in the Bills of Quantity or as instructed by the Engineer.

Work Method: **LB or MB**

Quality Control

The Engineer shall check the cleared widths at 50 metre intervals

Measurement Unit: m2

The measurement shall be the area cleared to the specified width over the length as instructed by the Engineer.

Payment:

The unit rate shall be the full compensation for all labour, tools, equipment and incidental costs required to complete the work.

04-50-004 Bush Clearing (Light)

The Contractor shall clear all vegetation including small trees, and shrubs with their root systems. Grasses and any undergrowth shall be cut to a height of not more than 100mm. The cleared material shall be collected and disposed of away from the side drains and in a manner that causes no visibility obstruction to traffic.

This activity shall be carried out as either Machine Based or as Labour Based as defined in the Bills of Quantity or as instructed by the Engineer.

Work Method: **LB or MB**

Quality Control

The Engineer shall check the cleared widths at 50 metre intervals.

Measurement Unit: m2

The measurement shall be the area cleared to the specified width over the length as instructed by the Engineer.

Payment:

The unit rate shall be the full compensation for all labour, tools and incidental costs required to complete the work.

04-50-005 Pruning Tree Branches

Where instructed by the Engineer, the Contractor shall trim tree branches to improve visibility. Cut material shall be collected and disposed of as directed by the Engineer and burning of waste material

shall not be permitted.

Work Method: **LB**

Quality Control

The Engineer shall check for visibility improvement.

Measurement and Payment

A Provisional Sum shall be allowed for this item, which shall be paid under Day works.

04-50-006 Trees and Stumps Removal (200-450mm girth)

Trees and Stumps outside the construction width but within the road reserve having a trunk girth of between 200-450mm at a point 600mm above the ground shall only be removed on the instruction of the Engineer.

The Contractor shall excavate around any trees to be removed to a depth not less than 0.5 m before cutting the roots. Existing stumps shall be uprooted in the same manner. All holes left by the removal of trees and stumps shall be back-filled with approved material and compacted to existing ground level. Cut material and stumps shall be collected and disposed of as directed by the Engineer. Burning of waste material shall not be permitted.

Work Method: **LB**

Quality Control

The Engineer shall approve the removal, backfilling and satisfactory disposal of all waste material.

Measurement Unit: No

The measurement shall be the number of trees and stumps removed.

Payment

The unit rate shall be the full compensation for all labour, tools and incidental costs required to complete this item.

04-50-007 Trees and Stump Removal (>450mm girth)

All the requirements of item 04-50-003 shall apply for trees and stumps greater than 450mm girth. In addition any re-useable timber from trees removed shall be cut into logs not more than 1.5 metres long and stacked as directed by the Engineer.

Work Method: **LB**

Quality Control

The Engineer shall approve the removal, backfilling and satisfactory disposal of all waste material.

Measurement Unit: No

Measurement shall be the number of trees and stumps removed

Payment:

The unit rate shall be the full compensation for all labour, tools, equipment and incidental costs required to complete this item.

04-50-008 Clearing Obstructions – Boulders and debris removal

The Contractor shall remove in a manner agreed by the Engineer, rocks and boulders greater than 1.5 m girth using labour, appropriate equipment and blasting as necessary. Boulders shall be disposed off outside the road area.

Blasting should only be done on instruction by the Engineer and only carried out by licensed individuals/firms.

Debris removal shall include:

Inspection of the road section(s) regularly
Removal of all obstructions such as fallen trees/ branches, rock fall, landslides and broken signs away from the road, side drains, mitre drains and other drains, inlets and outlets of drifts, culverts and other structures and the safe disposal thereof outside the road formation width.
Removal of dead animals' carcasses away for the carriageway and disposing of them as directed by the Engineer. Liaison with the Police may be necessary.

This activity shall be carried out as Machine Based, Labour Based or a mixture of the two as defined in the Bills of Quantity or as instructed by the Engineer.

Work Method: **LB, MB, LB-MB**

Quality Control

The Engineer shall approve the removal and satisfactory disposal of the boulders / debris.
The road section shall be free of any obstruction.

Measurement Unit: Provisional Sum

A Provisional Sum shall be included for this item

Payment:

Payment shall be made on a Day works basis.

04-50-009 Stripping and Grubbing

The Contractor shall remove, over the widths shown in Table 4.1, topsoil including grass, anthills, loose boulders up to 1.5m girth and other unsuitable material and deposit the debris outside the cleared area as directed by the Engineer.

Work Method: **LB**

Quality Control

The Engineer shall approve the stripped and grubbed area and the satisfactory disposal of waste material.

Measurement Unit m2

The measurement shall be the area grubbed as directed by the Engineer

Payment

The unit rate shall be the full compensation for all labour, tools and incidental expenses required to complete this item.

04-50-010 Excavate, remove and disposal of concrete structures

The Contractor shall excavate, remove and dispose of concrete structures as directed by the Engineer.

This activity shall be carried out either as Machine Based, Labour Based or a mixture of the two as defined in the Bills of Quantity or as instructed by the Engineer.

Work Method: **LB, MB, LB-MB**

Quality Control

The Engineer shall approve the area where the structure was removed from and the satisfactory disposal of the concrete structures.

A Provisional Sum shall be included for this item

Payment: Provisional Sum

Payment shall be made on a Day works basis.

Measurement Unit: Provisional Sum

BILL 05: EARTHWORKS

This bill covers the excavation of soil and the placing, watering and compaction of hard and soft material to form the road formation.

05-50-001: Establishment of the Vertical Alignment - Slotting

The Contractor shall re-establish the vertical alignment of the road section which includes the setting out and excavation of horizontal slots marking the level road platform.

The width of the slots shall be 0.5 m and they shall be set out at 10m intervals along the straight section and 5m on the curve sections of the road. Each slot shall be compacted using hand rammers until no more imprints of the rammer on the surface of the slot can be seen. The length of each slot shall be equal to the formation width of the road.

Vertical alignment standards shall be those set out in Table 5.1

Table 5.1 Vertical Alignment Standards

Standard	Flat & Rolling Terrain	Hilly Terrain
Gradients		
Desirable Minimum	2%	2%
Desirable Maximum	8%	10%
Absolute Maximum	10%	12%

The Contractor shall use **Labour** to carry out this item of work.

Work method: **LB**

Quality Control:

The hand rammer shall be not less than 5kg
The level of the slot shall have a tolerance of + 50 mm
The longitudinal profile of the road shall be checked at every third slot and shall have a maximum tolerance of + 50mm

Measurement Unit: m

The measurement shall be linear metres of road alignment set out

Payment:

The unit rate shall be the full compensation for labour, tools, materials and incidental costs required for carrying out the work.

05-50-002: Excavation, spread and compact in soft material (side drains)

The Contractor shall excavate side drains to the profiles shown on the Drawings or as directed by the Engineer.

Soft material in this case is defined as any material which is not hard or rock in which the average output is more than 1.5 m3 per PD.

The material from the excavations shall be placed on the carriageway, spread and compacted. Where additional material is required to achieve the required camber, the widths of the side drains may be increased, with the approval of the Engineer.

The fill layers to be compacted shall not exceed 150mm loose depth.

Compaction of the fill material shall be carried out from the edges to the centre by overlapping passes of the compaction equipment. The number of passes shall be as directed by the Engineer dependent upon the equipment used and the material being compacted. Unless otherwise instructed the moisture content of the material shall be within + 2% of optimum. Where additional moisture is required, water shall be applied in an even manner such that no longitudinal or transverse flow occurs.

Locations of the side drains shall be as shown on the Drawings or as directed by the Engineer, and the Contractor shall use the appropriate ditch template to control the excavations

The Contractor shall use **Labour** and appropriate compaction **Equipment** to carry out this item of work

Work method: **LB - MB**

Quality Control

- The dimensions of the side drains shall be checked at 50m intervals and shall have a tolerance of + 50mm
- The longitudinal profile of the side drains shall be checked at 30m intervals and shall have a tolerance of +50mm.
- *Compaction shall show no movement of material under the roller – minimum of 6 passes.*
- *Compaction test standard shall be 95% MDD (AASHTO T99)*

Measurement Unit m3

Measurement shall be the volume of material excavated to form the side drains, and deposited for camber formation.

Payment

The unit rate shall be the full compensation for labour, tools and incidental costs required for carrying out the work.

05-50-003 Excavation, spread and compact in hard material (side drains)

Where, in the opinion of the Engineer, the material to be excavated to form the side drains may be classified as hard (not rock) the Contractor shall carry out the excavation in accordance with 04-50-003 and shall be compensated under this item.

Hard material in this case is defined as hard gravel, dry black cotton soil, soil with high percentage of stones or other material in which the output is less than 1.5 m3 per PD.

This activity shall be carried out either as Machine Based, Labour Based or a mixture of the two as defined in the Bills of Quantity or as instructed by the Engineer.

Work Method: **LB, MB, LB-MB**

Quality Control:

The Engineer shall measure the volume of the excavation classified as Hard material

Measurement Unit: m3

The measurement shall be the volume of material excavated and deposited to form the camber

Payment:

The unit rate shall be the full compensation for all labour, tools, equipment and incidental costs required to complete the work.

05-50-004 Excavation to Level and Compaction

The Contractor shall cut material to form the level road platform and place the excavated material as fill or in spoil areas approved by the Engineer. Where material needs to be borrowed excavation shall only be from borrow areas approved by the Engineer.

The fill layers to be compacted shall not exceed 150mm loose depth.
Compaction of the fill material shall be carried out from the edges to the centre by overlapping passes of the compaction equipment. The number of passes shall be as directed by the Engineer dependent upon the equipment used and the material being compacted. Unless otherwise instructed the moisture content of the material shall be within + 2% of optimum. Where additional moisture is required water shall be applied in an even manner such that no longitudinal or transverse flow occurs.

The Engineer may instruct the Contractor to carry out density tests on the compacted material to ensure that an acceptable standard has been achieved.

The Contractor shall use Labour and appropriate compaction Equipment to carry out this item of work.

Work Method: **LB - MB**

Quality Control

- The width of the platform shall be checked at intervals of 50 m and shall have a tolerance of +50mm.
- *The level platform shall be horizontal in the transverse direction and shall have a tolerance of +15 mm under a 2 metre straight edge.*
- *The longitudinal profile shall have a maximum tolerance of +50 mm over a 30m length of gradient.*
- *Compaction shall show no movement of material under the roller – minimum of 6 passes.*
- *Compaction test standard shall be 95% MDD (AASHTO T99)*

Measurement Unit: m3

The measurement shall be the volume of compacted fill material forming the level platform.

Payment

The unit rate shall be the full compensation for labour, tools, equipment, water and incidental costs required for carrying out the work.

05-50-005 Spreading and Compaction for Camber Formation

The Contractor shall spread and compact the material deposited from the side drains to form the camber on the road, in accordance with the Drawings or as directed by the Engineer, and shall check the profile with the appropriate camber board.

Compaction shall be carried out from the edges to the centre line by overlapping passes of the compaction equipment. The number of passes shall be as directed by the Engineer dependent upon the equipment used and the material being compacted. Unless otherwise instructed the moisture content of the material shall be within + 2% of optimum. Where additional moisture is required water shall be applied in an even manner such that no longitudinal or transverse flow occurs.

The Engineer may instruct the Contractor to carry out density tests on the compacted material to ensure that an acceptable standard has been achieved.

The Contractor shall use **Labour** and appropriate compaction **Equipment** to carry out this item.

Work method: LB-MB

Quality Control

- The width of the carriageway including the shoulders shall be checked at 50m intervals and shall have a tolerance of +50/-20 mm.
- The camber shall be checked 50m intervals and shall have a tolerance of + 1%.
- Longitudinal levels shall be checked with a straight edge of minimum 2.7 m length. Maximum tolerance of +10 mm.
- Compaction shall show no movement of material under the roller, minimum of 6 passes.
- Compaction test standard shall be 95% MDD (AASHTO T99)

Measurement Unit m2

The measurement shall be the area of camber formed, according to the specified carriageway width and measured length of road.

Payment

The unit rate shall be the full compensation for all labour, tools, equipment, water and incidental costs

required for carrying out the work.

05-50-006 Fill in soft material and compact.
05-50-007 Fill in hard material and compact.
05-50-008 Cut to spoil in soft material.
05-50-009 Cut to spoil in hard material.
05-50-010 Cut to fill in soft material.
05-50-011 Cut to fill in hard material.
05-50-012 Rock to fill to swamp
05-50-013 Filter to swamp under, over and around rock fill

These activities should be done in accordance with Bill 5, sub clauses 5.01 to 5.17 in the Standard Specifications for Roads and Bridges 1986.

05-50-014 Grassing

The Contractor shall plant sprigs of approved indigenous 'runner' type grass. The Contractor shall care for and water the grass until it is firmly established.

The Contractor shall use Labour to carry out this item of work.

Work Method: **LB**

Quality Control

The quality of grass and spacing of the sprigs shall be as directed by the Engineer

Measurement Unit m^2

The unit of measurement shall be area calculated as the net area, measured on the slope.

Payment

The unit rate shall be full compensation, for labour, materials, tools, water and incidental costs required to carry out the work.

05-50-015 Back slope / Slope maintenance

This activity involves the protection / repair of erosion on embankment slopes, cut faces, shoulders, and side slopes by filling with suitable soils and compacting using appropriate tamping tools as instructed by the Engineer.

The Contractor shall use Labour to carry out this item of work.

Work Method: **LB**

Quality Control

The width of the slope shall be measured at 50m intervals and shall have maximum tolerances of +100mm.

Measurement Unit m^2

The unit of measurement shall be area calculated as the net area, measured on the slope.

Payment

The unit rate shall be full compensation, for labour, materials, tools and incidental costs required to carry out the work.

BILL 07: EXCAVATION AND FILLING FOR STRUCTURES

This bill covers all Works in connection with the excavation for concrete pipe culverts; inlet and outlet structures; drifts and drainage protection Works;

07-50-001 Excavation for Drainage Structures – Soft Material

The Contractor shall excavate trenches for culverts; foundations for head walls, wing walls; inlet and outlet aprons and other drainage structures to the dimensions and levels shown on the Drawings or as directed by the Engineer. The excavations shall be kept free of water and shall be compacted with hand rammers of not less than 5kg.

The Engineer shall approve all excavations before the Contractor shall be permitted to proceed with the construction.

The Contractor shall take all necessary precautions to safeguard the stability and safety of the excavations.

The Contractor shall apply Labour methods to carry out this item

Work Method **LB**

Quality Control

- The dimensions of the excavations shall have a tolerance of +50mm
- The invert levels shall have a tolerance of +50mm
- The trench bottom gradients shall have a tolerance of +20mm over the length of the trench

Measurement Unit m3

The measurement shall be volume of material excavated measured net according to the Drawings.

Payment

The unit rate shall be the full compensation for labour, tools, and any incidental costs required for carrying out the work.

07-50-002 Excavation for Drainage Structures – Hard Material

Where, in the opinion of the Engineer, the material to be excavated to form the side drains and other drainage structures may be classified as hard (not rock) the Contractor shall carry out the excavation in accordance with 07-50-001 and shall be compensated under this item.

Hard material in this case is defined as hard gravel, dry black cotton soil, soil with high percentage of stones or other material in which the output is less than 1.5 m3 per PD.

This activity shall be carried out either as Machine Based, Labour Based or a mixture of the two as defined in the Bills of Quantity or as instructed by the Engineer.

Work Method: **LB, MB, LB-MB**

Quality Control:

The Engineer shall measure the volume of the excavation classified as hard material
Measurement Unit: m3

The measurement shall be the volume of material excavated and deposited.

Payment:

The unit rate shall be the full compensation for all labour, tools, equipment and incidental costs required to complete the work.

07-50-003 River training in soft material
07-50-004 River diversion
07-50-005 Porous filter material
07-50-006 Selected granular fill material
07-50-007 Cut to fill in soft material

These activities should be done in accordance with Bill 7, sub clauses 7.01 to 7.13 in the Standard Specifications for Roads and Bridges 1986.

BILL 08: CULVERT AND DRAINAGE WORKS

This bill covers all Works in connection with the installation of concrete pipe culverts; inlet and outlet structures; drifts and drainage protection Works; and the construction of Scour Checks

08-50-002: Ditch Cleaning

i. Partially silted

Partially silted drains are those that are less than half silted and require only cleaning.

All deposited material, debris, and vegetation shall be removed and the drain shaped to the original cross section and left in a free-draining condition. Suitable material may be used to fill depressions and potholes on the carriageway. All debris and other unsuitable material removed from the side drains shall be disposed of well clear of the drainage system in approved spoil dumps where it will not cause any obstruction or be washed back.

The side drains, mitre drains and catch water drains shall be cleaned before the onset of the rains or as directed by the Engineer.

This activity shall be carried out either as Machine Based, Labour Based or a mixture of the two as defined in the Bills of Quantity or as instructed by the Engineer.

Work Method: **LB, MB, LB-MB**

Quality Control

- Appropriate drain templates shall be used to check and control the dimensions of the drains.
- The longitudinal profile of the drains shall be checked using boning rods, to ensure free flow.

Measurement Unit: m

The measurement shall be the length of drain desilted or cleaned to the specified cross section.

Payment

The unit rate shall be full compensation, for labour, tools, and incidental costs required to carry out the work.

ii. Fully silted

Fully silted drains shall be those that are greater than half-silted and require re-excavation or reshaping.

All deposited material, debris, and vegetation shall be removed and the drain shaped to the original cross section and left in a free-draining condition. Suitable material may be used to fill depressions and potholes on the carriageway. All debris and other unsuitable material removed from the side drains shall be disposed of well clear of the drainage system in approved spoil dumps where it will not cause any obstruction or be washed back.

The side drains shall be desilted or re-excavated before the onset of the rains, or as directed by the Engineer.

This activity shall be carried out either as Machine Based, Labour Based or a mixture of the two as defined in the Bills of Quantity or as instructed by the Engineer.

Work Method: **LB, MB, LB-MB**

Quality Control

- Appropriate drain templates shall be used to check and control the dimensions of the drains.
- The longitudinal profile of the drains shall be checked using boning rods, to ensure free flow.

Measurement Unit: m

The measurement shall be the length of drain re-excavated or re-shaped to the specified cross-section.

Payment

The unit rate shall be full compensation for equipment, labour, tools, and any incidental costs required to carry out the work.

08-50-003: Ditch Works earth fills.

This activity involves the reinstatement/protection works of culvert outlets by filling the resultant eroded ditch gullies with specified suitable soft material to ensure free passage of water at all times without causing further damage. The ditch shall be excavated to firm ground and shaped to the required suitable shape (depth, width, levelled and smoothened) to the satisfaction of the engineer prior to filling. The fill material shall be deposited in layers as directed by the Engineer.

The filling shall be carried with approved soft material and compacted in layers not exceeding 150 mm loose depth or in thickness that shall not exceed the maximum that the equipment and method of operation can process to meet the required compaction as directed by the Engineer.

The Contractor shall first reshape the eroded ditch gullies to suitable shapes for working, remove any unsuitable materials, supply, dump, spread and process and compact in accordance with Section 508 of the Standard Specifications or as instructed by the engineer.

Work Method: **LB-MB**

Quality Control:

The Engineer shall approve the borrow materials, measure the volume of the borrow fill materials, the compaction achieved of each layer and the gradient of the out fall to avoid further erosion.

Measurement Unit: m3

The measurement shall be the volume of the fill material excavated, transported and deposited to fill the ditch gullies.

Payment:

The unit rate shall be the full compensation for all labour, materials, tools, equipment and incidental costs required to complete the work.

08-50-004: Ditch Works rock fills. Supply and fill

This activity involves the reinstatement/protection works of culvert outlets by filling the resultant eroded ditch gullies with specified suitable hard material to ensure free passage of water at all times without causing further damage. The ditch shall be excavated to firm ground and shaped to the required suitable shape (depth, width, levelled and smoothened) to the satisfaction of the engineer prior to filling. The fill material shall be deposited in layers as directed by the Engineer.

The filling shall be carried with approved hard material and compacted in layers not exceeding 150 mm loose depth and systematically compacted by at least 8 passes of a towed vibrating roller weighing not less than 5 tonnes dead weight or in thickness that shall not exceed the maximum that the equipment and method of operation can process to meet the required compaction as directed by the Engineer. During compaction the surface of the layer shall be watered as necessary to facilitate the filling of the voids with the blinding material.

The Contractor shall first reshape the eroded ditch gullies to suitable shapes for working, remove any unsuitable materials, supply, dump, spread and process and compact in accordance with Section 508 of the Standard Specifications or as instructed by the engineer.

Work Method: **LB-MB**

Quality Control:

The Engineer shall approve and measure the volume of the hard materials, the compaction achieved of each layer and the gradient of the out fall to avoid further erosion.

Measurement Unit: m3

The measurement shall be the volume of the hard material excavated, transported and deposited to fill the ditch gullies to the desired level.

Payment:

The unit rate shall be the full compensation for all labour, materials, tools, equipment and incidental costs required to complete the work.

08-50-005: Ditch/Mitre Drains/Catch water Drains

The Contractor shall excavate side drains, mitre drains and catch water drains to the dimensions shown on the Drawings and at locations as directed by the Engineer. They shall be excavated in a manner to minimise erosion at the discharge point. The material excavated from the drains shall be used to form the side drain bund directing water to the mitre-drain, and a bund on the lower side of the cut-off drain, or used for forming camber or disposed of as directed by the Engineer.

This activity shall be carried out either as Machine Based, Labour Based or a mixture of the two as defined in the Bills of Quantity or as instructed by the Engineer.

Work Method: LB, MB, LB-MB

Quality Control

- The longitudinal profile shall have a gradient of maximum 4%.
- The dimensions of the drains shall have maximum tolerances of +20mm
- The location of the drains shall be approved by the Engineer.

Measurement Unit: m3

The measurement shall be the volume of material excavated as measured on site in approved drains.

Payment

The unit rate shall be full compensation for labour, tools, equipment and incidental costs required for carrying out the work.

08-60-001/005: Culvert Cleaning (partially blocked)

08-60-001 300mm dia
08-60-002 450mm dia
08-60-003 600mm dia
08-60-004 900mm dia
08-60-005 1200 mm dia

This activity involves the cleaning of culverts of specified sizes including pipe barrels, the outlet/inlet structures, and the outlet drains, keeping them free of all debris, weed, silt and any obstruction to ensure free passage of water at all times. The debris shall be deposited in approved spoil dumps as directed by the Engineer

Partially blocked culverts shall be those with less than half of the barrel blocked.

Correct widths and slopes of the outlet drains shall be maintained. The gradient of the outlet drain shall be not less than 2 %.

All broken culvert barrels discovered in the course carrying out this activity shall be reported to the Engineer.

This activity shall be carried out before the rains, or as directed by the Engineer.

The Contractor shall use **Labour** to carry out this item of work

Work Method: **LB**

Quality Control

The culverts shall be checked as free of debris to the satisfaction of the Engineer.

Measurement Unit: m

The measurement shall be the length of culvert, including the outlet drain, cleaned

Payment

The unit rate shall be full compensation for **labour,** tools and incidental costs required to carry out the work.

08-60-006/7/8/9/10: Culvert Cleaning (Fully blocked):

08 - 60 - 006 300mm dia;
08 - 60 - 007 450mm dia;
08 - 60 - 008 600mm dia;
08 - 60 - 009 900mm dia;
08 - 60 - 010 1200mm dia

This activity involves the cleaning of culverts of specified sizes including pipe barrels, the outlet/inlet structures, and the outlet drains, keeping them free of all debris, weed, silt and any obstruction to ensure free passage of water at all times. The debris shall be deposited in approved spoil dumps as directed by the Engineer

Fully blocked culvert shall be those with greater than half of the barrel blocked.

Correct widths and slopes of the outlet drains shall be maintained. The gradient of the outlet drain shall be not less than 2 %.

All broken culvert barrels discovered in the course of carrying out this activity shall be reported to the Engineer.

This activity should be carried out before the onset of the rains, or as directed by the Engineer.

The Contractor shall use **Labour** to carry out this item of work.

Work Method: **LB**

Quality Control

The culverts shall be checked as free from debris, to the satisfaction of the Engineer.

Measurement Unit: m

The measurement shall be the length of culvert, including the outlet drain cleaned.

Payment

The unit rate shall be full compensation for **labour**, tools and incidental costs required to carry out the work.

08-60-011/015 Concrete Culvert Repair / Replacement – Rings

08-60-11 300 mm
08-60-12 450 mm
08-60-13 600 mm
08-60-14 900 mm
08-60-15 1200 mm

The Contractor shall supply, lay and join concrete pipes to replace damaged culvert rings, including the concrete bedding and backfilling as instructed by the engineer.

The pipes shall be of Class 20/20 concrete, at least 28 days cured, and manufactured on site or procured from a supplier approved by the Engineer. The pipes shall be laid on a bedding of Class 15/20 concrete.

The culvert ring shall follow the existing gradient and shall be free flowing – minimum 2%.

Backfilling shall be carried with approved material and compacted in layers not exceeding 150 mm loose depth and placed evenly on each side of the pipe. Ramps shall be shaped to achieve a minimum overfill of 75% of the pipe diameter, and shall be tapered back on the carriageway to provide a gradual approach, as directed by the Engineer.

On completion the inside of the culvert shall be smooth, without displaced joints or other obstructions and true to line and level.

The Contractor shall use **Labour** and appropriate compaction **Equipment** to carry out this item work

Work Method: **LB-MB**

Quality Control

- Concrete quality shall be checked for cracks, honey combing, and other defects.
- Before the pipes are laid, the gradient of the concrete bedding shall be checked and shall not be less than 2%
- The joints shall be checked to see that they have been properly made.

Measurement Unit: m

The measurement shall be in linear metres of the installed Type and size of culvert specified, measured net according to the Drawings.

Payment

The unit rate shall be the full compensation for labour, tools, materials, equipment and any other incidentals that may be required in carrying out the work.

08-60-021/029 Supply and Installation of Concrete Pipe Culverts

08-60-016	**300**	**mm**	**unhaunched**
08-60-021	**300**	**mm**	**surrounds**
08-60-022	**450**	**mm**	**unhaunched**
08-60-023	**450**	**mm**	**surrounds**
08-60-024	**600**	**mm**	**unhaunched**
08-60-025	**600**	**mm**	**surrounds**
08-60-026	**900**	**mm**	**unhaunched**
08-60-027	**900**	**mm**	**surrounds**
08-60-028	**1200**	**mm**	**unhaunched**
08-60-029	**1200**	**mm**	**surrounds**

The Contractor shall supply, lay and join concrete pipes to form culverts, including the concrete bedding; haunching or surrounds; and backfilling, in accordance with the Drawings for the Type and diameter specified in the Contract or directed by the Engineer.

The pipes shall be of Class 20/20 concrete, at least 28 days cured, and manufactured on site or procured from a supplier approved by the Engineer and preferably ogee jointed. The pipes shall be laid on a bedding of Class 15/20 concrete of dimensions as shown on the Drawings and jointed with cement mortar 1:4.

The culvert gradient including the outlet shall be a minimum 2%.

The pipes shall be surrounded with Class 15/20 concrete to the dimensions shown on the Drawings or as directed by the Engineer.

Backfilling shall be carried with approved material and compacted in layers not exceeding 150 mm loose depth and placed evenly on each side of the pipe. Ramps shall be shaped to achieve a minimum overfill of 75% of the pipe diameter, and shall be tapered back on the carriageway to provide a gradual approach, as directed by the Engineer.

If the Contractor wishes to construct culverts on site, using inflatable or collapsible forms the Engineer's approval shall first be sought for the proposed working method.

On completion the inside of the culvert shall be smooth, without displaced joints or other obstructions and true to line and level.

The Contractor shall use **Labour** and appropriate compaction **Equipment** to carry out this item work

Work Method: LM-MB

Quality Control

- Concrete quality shall be checked for cracks, honey combing, and other defects.
- Before the pipes are laid, the gradient of the concrete bedding shall be checked and shall not be less than 2%
- The joints shall be checked to see that they have been properly made.

Measurement Unit: m

The measurement shall be in linear metres of the installed Type and size of culvert specified, measured net according to the Drawings.

Payment

The unit rate shall be the full compensation for labour, tools, materials, equipment and any other incidentals that may be required in carrying out the work.

08- 60-017 Head Wall Repair - Masonry

This activity involves the repairs to damaged head walls and wing walls built in masonry.

Where directed by the Engineer, the masonry walls shall be inspected and loose or missing stone re-secured or replaced. Damaged pointing shall be repaired with cement mortar 1:4 and finished flush with the stonework.

The Contractor shall use **Labour** to carry out this item of work

Work Method: **LB**

Quality Control

- The stability of the walls and the pointing shall be to the satisfaction of the Engineer.

Measurement Unit: No

The measurement shall be the number of walls repaired as directed by the Engineer.

Payment

The unit rate shall be full compensation for labour, materials, tools, and incidental costs required to carry out the work.

08-60-018 Headwall Repair - Concrete

The activity involves the repairs to damaged concrete headwalls and wing walls, and to inlet/outlet concrete aprons. Concrete walls shall be inspected and repair works carried out as instructed by the Engineer to include breaking out and replacement of damaged concrete with similar material, and the rendering of open texture areas with cement mortar 1:4. Broken wall sections shall be re-built in 20/20 (1:2:4) concrete within formwork erected on the correct lines and levels in accordance with the Standard Drawings. Areas of new concrete and mortar shall be protected from direct sunlight and kept moist for 3 days.

The Contractor shall use Labour to carry out this item of work

Work Method: **LB**

Quality Control

The work shall be carried out to the satisfaction of the Engineer.

Measurement Unit: No

The measurement shall be the number of walls/aprons repaired.

Payment

The unit shall be full compensation for labour, materials, tools, and incidental costs required to carry out the work.

08-60-019 Headwall Construction - Masonry

The Contractor shall construct inlet and outlet structures for culverts including headwalls, wingwalls in stone masonry or concrete block, and aprons in concrete to the dimensions and levels shown on the Drawings (Types 1 to 4) as directed by the Engineer. The walls shall be built on foundations of class 15/20 concrete and jointed with cement mortar 1:4. The aprons shall be in Class 20/20 concrete and after laying the surface shall be kept moist for 3 days.

The Contractor shall use **Labour** to carry out this item.

Work Method: **LB-MB**

Quality Control

- The dimensions of the structures shall have a tolerance of +10mm
- The levels shall have a tolerance of +10mm
- The mortar joints shall be finished flush with the face of the walls.

Measurement Unit: m3

The measurement shall be the volume of the structures constructed, in whichever material, measured net according to the Drawings.

Payment

The unit rate shall be the full compensation for labour, tools, materials and any other incidentals that may be required in carrying out the work.

08-60-020 Headwall Construction – Concrete

The Contractor shall construct inlet and outlet structures for culverts in concrete to the dimensions and levels shown on the Drawings (Type 1 to 4) as directed by the Engineer.

Concrete shall be Class 20/20 unless otherwise specified. The formwork for the walls shall be erected on the concrete foundations, to the correct dimensions, and shall be approved by the Engineer before concrete is poured. Concrete shall be poured in a single lift and the top surface shall be kept moist for 3 days. Formwork may be struck after 2 days or as directed by the Engineer.

The Contractor shall use a concrete vibrator or other means approved by the Engineer to ensure full compaction of the concrete.

The Contractor shall use both **Labour** and appropriate **Equipment** to carry out this item.

Work Method: LM-MB

Quality Control

- The dimensions of the structures shall have a maximum tolerance of + 20mm / - 10mm
- The workability and mix of concrete shall be checked using the slump test and shall have a slump limit as directed by the Engineer. The frequency of testing shall be determined by the Engineer
- The concrete shall be checked for cracks, honey combing and other defects at the time of striking the formwork.

Measurement Unit: m^3

The measurement shall be the volume of concrete in the completed structure, measured net in accordance with the Drawings.

Payment

The unit rate shall be the full compensation for labour, tools, materials, formwork, equipment and other incidentals that may be required in carrying out the work.

08-60-030 Excavate in soft material for culverts
08-60-031 Excavate in hard, material for culverts
08-60-032 Provide, lay and join 450mm inner dia. Concrete pipes
08-60-033 Provide, lay and join 600mm inner dia. Concrete pipes
08-60-034 Provide, lay and join 900mm inner dia. Concrete pipes
08-60-035 Provide, compact class 15/20 concrete
08-60-036 Provide, compact class 20/25 concrete
08-60-037 Provide and place A142 fabric mesh reinforcement
08-60-038 Selected backfill materials

These activities should be done in accordance with Bill 8, sub clauses 8.01 to 8.20 in the Standard Specifications for Roads and Bridges 1986.

The Contractor shall use both **Labour** and appropriate **Equipment** to carry out this item.

Work Method: **LM-MB**

Quality Control

- The workability and mix of concrete for the classes 15/20 and 20/25 shall be checked using the slump test and shall have a slump limit as directed by the Engineer.

- The laying and joining of the culverts shall be subject to the approval of the engineer.

Measurement Unit: m

The measurement shall be the length of culvert laid.

Payment

The unit rate shall be the full compensation for labour, tools, materials, formwork, equipment and other incidentals that may be required in carrying out the work.

08-70-001: Stone Pitching

The Contractor shall lay stone pitching at locations shown on the Drawings or as directed by the Engineer, which shall include levelling the area to be covered with stone pitching, collecting stones, laying stones, applying mortar to the joints and constructing weep holes, if required.

The area to be covered with stone pitching shall be trimmed to the level and slope shown on the Drawings or as directed by the Engineer. The prepared surface shall be firm and well compacted, with hand rammers.

The stones shall have minimum dimensions of 150mm and maximum 300mm and shall be set on the flat side and securely bedded, with the largest dimensions at right angles to the flow of water, in an interlocking pattern so as to leave only a minimum of voids between the stones which shall be filled with suitably shaped and tightly wedged spalls. The top of the pitching shall be finished flush with the adjacent material.

The stones shall be placed in full contact with the surface and bedded into cement mortar 1:4 with a minimum thickness of 100 mm. The mortar shall be worked into the pitching so that the voids between the stones are filled to the full depth of the pitching. The mortar shall be finished flush with the surface of the stones.

Weep holes shall be provided to stone pitching on slopes as directed by the Engineer.

The surface of the stone pitching shall be protected from direct sunshine and kept moist for 2 days.

The Contractor shall use **Labour** to carry out this item.

Work Method: **LB**

Quality Control

- The quality of pitching shall be checked for gaps and voids.
- The dimensions of the area of stone pitching shall have a tolerance of +100mm

Measurement Unit: m2

The measurement shall be the total area of pitching calculated as the net area, measured on the slope.

Payment

The unit rate shall be full compensation, for labour, tools, materials, and incidental costs required for carrying out the work.

08-70-002: Stone Pitching Repair

This activity involves the repair of stone pitching on slopes, in inlet/outlet aprons and access drifts. The

stone pitching shall be inspected and repairs carried out as directed by the Engineer, including the replacement and re-bedding of missing or loose stones; the repair of mortar jointing: and the cleaning out of weep holes, as required. All work shall be to the lines and levels of the original construction with new stonework and mortar being flush with the adjacent materials.

The Contractor shall use **Labour** to carry out this work

Work Method: **LB**

Quality Control

The work shall be carried out to the satisfaction of the Engineer.

Measurement Unit: m2

The measurement shall be the net surface area of the repairs.

Payment

The unit rate shall be full compensation, for labour, tools, materials, and incidental costs required to carry out the work.

08-70-003: Gabion Repair

The Contractor shall repair installed Gabions using 3 mm galvanized binding wire to its original dimensions as directed by the Engineer.

The Contractor shall use Labour to carry out this item.

Work Method: **LB**

Quality Control

The repair of the Gabions shall be approved by the Engineer.

Measurement Unit: No

The measurement shall be the number of Gabion boxes repaired/installed.

Payment

The unit rate shall be the full compensation for labour, materials, and any incidental item costs necessary to carry out the work.

08-70-004: Gabion Installation

The Contractor shall provide and install Gabions as retaining walls and anti-erosion structures at locations shown on the Drawings or as directed by the Engineer.

Gabions shall include mattresses and boxes and for purposes of construction, measurement and payment, no distinction shall be made between them.

Gabions shall be ‘Maccaferi” boxes or ‘Reno’ matresses or equivalent approved by the Engineer.

The surfaces on which the Gabions are to be laid prior to being filled with rock shall be levelled to the depths and dimensions shown on the Drawings or as directed by the Engineer.

Gabion boxes shall be tied together with 3 mm galvanised binding wire securing all edges at 150mm intervals.

The Contractor shall use **Labour** to carry out this item.

Work Method: **LB**

Quality Control

The placing and tying of the Gabions shall be approved by the Engineer before filling commences.

Measurement Unit: No

The measurement shall be the number of Gabion boxes installed.

Payment

The unit rate shall be the full compensation for labour, materials, and any incidental item costs necessary to carry out the work.

08-70-005: Rock fill to Gabions

The Contractor shall provide selected rock, crushed if necessary, and carry out the packing and compacting of the rock inside the Gabion boxes.

The boxes shall be filled in layers from the sides towards the middle in an interlocking stone matrix to prevent deformation and bulging. The interior and top layers of the boxes shall be hand packed with smaller stone to form a tightly compact structure and rammed in place. Care shall be taken to ensure that each layer of boxes is filled evenly and to a level surface before the next course of boxes is placed.

The Contractor shall use a combination of **Labour** and transport **Equipment** to carry out this activity.

Work method: **LB-MB**

Quality Control

The filling and compaction of the stones in the Gabion boxes shall be approved by the Engineer.

Measurement Unit m^3

Rock fill to Gabions shall be the volume of Gabions filled.

Payment

The unit rate shall be the full compensation for labour, tools, materials and incidental costs required for carrying out the work.

08-70-006: Construction of Scour Checks (Concrete)
08-70-007: Construction of Scour Checks (Masonry)
08-70-008: Construction of Scour Checks (Wooden Stakes)

The Contractor shall construct scour checks using either stones, wooden stakes, or concrete as instructed by the Engineer.

Construction of concrete scour checks shall be in class 20/20 concrete, unless otherwise specified, and to the details shown in the Drawings.

Spacing for scour checks shall be as shown in Table 8.1, or as directed by the Engineer.

Table 8.1: Scour checks spacing

Gradient of Drain	Scour Check Spacing	Gradient of Drain	Scour Check Spacing
4% or less	not required	8%	7.5m
5%	20m	9%	6m
6%	15m	10%	5m
7%	10m	>10%	4m

The Contractor shall use **Labour** to carry out this item.

Work method: **LB**

Quality Control

The spacing of the scour checks shall have a tolerance of + 0.5m
The sizes of the wooden stakes and stones used shall be in accordance with the Drawings
The shape of the scour check shall be checked using the scour check template.

Measurement Unit: No.

The measurement shall be the **number** of scour checks constructed.

Payment

The unit rate shall be full compensation, for labour, tools, materials and incidental costs required for carrying out the work.

08-70-009: Scour Check Repair - masonry
08-70-010: Scour Check Repair - wooden
08-70-011: Scour Check Repair - concrete

This activity involves the repair of Scour Checks using stones or wooden stakes or concrete. The construction details shall be shown in the Drawings or as instructed by the Engineer.

Scour checks shall be inspected and the repairs carried out as directed by the Engineer, which shall include replacement of missing or broken stonework and stakes; and the repair of damaged concrete, to the original lines, levels, and Specifications.

The Contractor shall use **Labour** to carry out this item work.

Work Method: **LB**

Quality Control

The sizes of the wooden stakes and stones used shall be as the original construction.
The shape of the scour check shall be checked using the scour check template.

Measurement: No.

The unit rate of measurement shall be the number of scour checks repaired.

Payment

The unit rate shall be full compensation, for labour, tools, materials, and incidental costs required for carrying out the work.

08-70-012 At-level Scour Checks

The Contractor shall select and place flat stones of minimum dimensions 0.10-0.15m in gently sloping channels (parabolic waterway) at locations and intervals as shown in drawing C9c. The stones shall be placed in a manner to ensure minimum voids within the structure. A trench 0.2m deep by 0.2m wide shall be excavated in the invert of the channel and extended 0.2m into the slopes. Stones shall be laid up to the level of the invert with the middle section lower than the sides to form a spill way. The spacing of the checks shall be 1-4 metres, as directed by the Engineer.

The Contractor shall use **Labour** to carry out this item.

Work Method: **LB**

Quality Control

The construction and spacing of the scour checks shall be checked by the Engineer.

Measurement Unit: **No**

The measurement shall be the number of scour checks constructed.

Payment

The unit rate shall be full compensation for labour, tools, materials and incidental costs required to carry out the work.
The payment for the construction of the parabolic waterway is under item 08-50-005

08-80-013 Gully – head protection - Stone Chute Stabilisation
08-80-014 Gully – head protection - Stone and Post Chute Stabilisation

The Contractor shall construct gully-head protection works as directed by the Engineer to the dimensions and details shown on Drawings C9d.

The dimensions of the stones shall not be less than 200mm and the volume not less than 0.01m3 for the smaller stones and pebbles to be used as the transition layer between the stone structure and the ground. No rounded stones shall be used. Posts shall be durable hardwood minimum 900mm in length and 15mm diameter.

The gully head shall be excavated as shown on Drawings to form a firm base for the stone layers. The initial layer shall be the small stones and gravel to a depth of 150mm after which the larger stone shall be carefully placed to form a compact matrix. Posts shall be driven a minimum of 600mm into the ground at spacing as directed by the Engineer.

The Contractor shall use **Labour** to carry out this item

Work Method: **LB**

Quality Control

The stone dimensions and construction shall be checked by the Engineer.

Measurement Unit: No

The measurement shall be number of units constructed

Payment

The unit rate shall be full compensation for labour, tools, materials and incidental costs required to carry out the work.

08-80-015 Stone Check Dams
08-80-016 Stone and Post Check Dams

The Contractor shall construct check dams in erosion gullies to the dimensions and details shown on Drawing C9e and/or as directed by the Engineer.

The dimensions of the stones in the main structure shall not be less than 200mm and the volume not less than 0.01 m3 for the stones and pebbles for the transition layer between the stone structure and the ground. No rounded stones shall be used.

Posts shall be durable treated hardwood of minimum diameter 0.10m, of minimum length 1.6m, driven at least 600mm into the ground. Stones shall be carefully hand-packed to provide a stable structure with a minimum of voids.

The dam checks shall be constructed such that the top of the dam is lower than the level of the adjacent land to leave sufficient channel for water flow, the crest of the check dam is parabolic in shape forming the spillway and it is keyed into the excavation of the gully floor and into the sides of the gully. The gully floor below the check dam must be protected from erosion by an apron with parabolic shape protecting the sides of the channel. The posts must be hammered into the ground to a depth equal to the post height above the ground or a minimum of 0.6 m.

The spacing of the check dams shall be as shown in the table below:

Check Dam Spacing					
Gradient	**Height of dam spill way (m)**				
%	**0.15**	**0.25**	**0.50**	**0.75**	**1.00**
5	15.0	25.0			
7	5.0	8.7	17.5	25	35
10	2.5	4.2	8.4	12.6	16.8
15	1.4	2.3	4.6	6.9	9.2
20	0.9	1.6	3.2	4.8	6.4
25		1.3	2.5	3.8	5.0
30		1.0	2.0	3.0	4.0
40			1.6	2.4	3.2
50			1.2	1.8	2.0

Work Method: **LB**

The Contractor shall use **Labour** to carry out this item

Quality Control

The Engineer shall check the workmanship and spacing of the check dams.

Measurement Unit: No

The measurement shall be the number of check dams constructed

Payment

The unit rate shall be full compensation for labour, tools, materials and incidental costs required to carry out the work.

08- 080-001 Access Drifts (Stone Pitching)

The Contractor shall construct Access drifts in grouted stone pitching to the dimensions as shown on drawing C18 or as directed by the Engineer. This shall include the provision of stone and the levelling of the areas to be covered.

The stone pitching for Access drifts shall comply with the requirement of 08–70-001 (stone pitching) with the addition of masonry toes at each end of the drift as shown on the Drawings.

The area to be covered shall be trimmed to the line and slope shown on the Drawings or as directed by the Engineer, and the prepared surface compacted with hand rammers or appropriate equipment.

The grouted stone pitching shall be covered with wet sacking or other approved cover for not less than 4 days after laying and shall not be subject to loading until adequate strength has been developed as instructed by the Engineer.

The Contractor shall use **Labour** and appropriate **Equipment** to carry out this item.

Work Method: **LB-MB**

Quality Control

i) Stone pitching quality shall be as for 08-70-001

Measurement Unit m2

The measurement shall be the area of stone pitching, measured net according to the Drawings.

Payment

The unit rate shall be full compensation for labour, tools, materials, equipment and incidental costs required for carrying out the work.

BILL 10: GRADING AND GRAVELLING
Scope:

Grading covers the work of reinstating the road carriageway to the correct camber by removing the high points and filling gullies, corrugations, and wheel ruts to restore a smooth running surface.

Grading can either be done by labour (Manual Reshaping) or by Machine (Motorized grading or towed grading).

Manual reshaping is preferable where there is sufficient labour. For existing roads with side drains light manual reshaping should be used as defined in 10-50-004. Heavy manual reshaping should be used for roads that have deteriorated to such an extent that the drains and carriageway need to be re-instated. Heavy Manual Reshaping is defined under Bill 5 – Earth Works.

Light grading is carried out on good and fair roads as a maintenance activity while heavy grading is for re-establishing a road in poor or very poor condition.

Gravelling consists of the excavation; loading, hauling, dumping, spreading and compacting using

approved equipment of gravel wearing course material on the formation of the road carriageway. Gravel shall include lateritic gravel, quartzitic gravel, calcareous gravel, decomposed rock, soft stone coral rag, clayey sand and crushed rock.

The material may be obtained from quarries, borrow pits or excavation in cuttings as directed by the Engineer. Gravel material shall conform to the requirement given in

Table 10.1: Requirement for Gravel Wearing Course

GRADING REQUIREMENTS	
Sieve (mm)	% by Weight Passing
40	100
28	95 – 100
20	85 – 100
14	65 – 100
10	55 – 100
5	35 – 92
2	23 – 77
1	18 – 62
0.425	14 – 50
0.075	10 – 40

For "Quarry Waste" gravel stones of maximum dimension 80mm may be permitted

PLASTICITY INDEX REQUIREMENTS PI		
Zone	Min	Max
WET: Mean annual rainfall > 500mm	5	20
DRY: Mean annual Rainfall < 500mm	10	30

BEARING STRENGTH REQUIREMENTS		
Traffic Commercial VPD	CBR	DCP Equivalent mm/Blow
>15	20	11
<15	15	14
CBR at 95 % MDD, Modified AASHTO and 4 days soaking		
Lower quality material (CBR 15) may be accepted if no better material can be found		

The Engineer shall approve quarries and the extent of their exploitation. The possible quarries shall be shown to the Contractor prior to commencement of the Works. The Contractor shall be responsible for the acquisition of the quarry rights and shall conduct respective negotiations with landowners and affected communities.

Alternative sources of gravel material whose quality can be shown to be in compliance with the specification requirements may be used, with the approval of the Engineer. The Contractor is deemed to have included in his rates for the provision of the gravel material.

10-50-001: Heavy Grading without watering and compaction.

Heavy grading without watering and compaction shall only be done when there is sufficient moisture in the material and the material can be compacted by traffic.

The Contractor shall scarify the existing carriageway surface, cutting high spots and moving materials to fill potholes, corrugations and wheel ruts and reshape the surface to the specified camber, using a Motor grader unless otherwise directed by the Engineer. All loose rocks, roots and grasses shall be removed first and disposed of well clear of the drains.

Pegs 300 to 400mm long shall be placed at 20 m intervals to mark edge of the carriageway.

The material shall be graded toward the centre of the road starting from both edges until the specified camber is achieved. Suitable material from the side drains may be used as additional material. Any further material needed to achieve the correct camber shall be from an approved source.

No grading shall be carried out in dry conditions.

The Contractor shall use **Equipment** to carry out this item.

Work Method: **MB**

Quality Control

- The width of the carriageway shall be checked at every 50m intervals and have a tolerance of + 50mm or -20mm.
- The camber shall be checked with a camber board at 25m intervals and shall have a tolerance of + 1%

Measurement Unit: m2

The measurement shall be the area of carriageway graded, measured net according to the specified width and measured length graded.

Payment

The unit rate shall be the full compensation for labour, tools, equipment and incidental costs required for carrying out the work.

10-50-002: Heavy Grading with watering and compaction.

The Contractor shall scarify the existing carriageway surface, cutting high spots and moving materials to fill potholes, corrugations and wheel ruts and reshape the surface to the specified camber, using a Motor grader unless otherwise directed by the Engineer. All loose rocks, roots and grasses shall be removed first and disposed of well clear of the drains.

Pegs 300 to 400mm long shall be placed at 20 m intervals to mark edge of the carriageway.

The material shall be bladed toward the centre of the road starting from both edges until the specified camber is achieved. Suitable material from the side drains may be used as additional material. Any further material needed to achieve the correct camber shall be from an approved source. Compaction shall be carried out using appropriate equipment approved by the Engineer, from the carriageway edges to the centerline in overlapping passes.

In order to achieve the desired compaction water shall be added in an even manner without transverse or longitudinal flow.

The Contractor shall use **Equipment** to carry out this item.

Work Method: **MB**

Quality Control

- The width of the carriageway shall be checked at every 50m intervals and have a tolerance of + 50mm or -20mm.
- The camber shall be checked with a camber board at 25m intervals and shall have a tolerance of + 1%
- Longitudinal levels shall be checked with a straight edge of minimum 2.7 m length. Maximum tolerance of + 10 mm.
- Compaction shall show no movement of material under the roller, minimum of 6 passes.
- Compaction test standard shall be 95% MDD (AASHTO T99)

Measurement Unit: m2

The measurement shall be the area of carriageway graded, measured net according to the specified width

and measured length graded.

Payment

The unit rate shall be the full compensation for labour, tools, equipment and incidental costs required for carrying out the work.

10-50- 004: Carriageway Grading - Light Grading

Light grading shall only be done when there is sufficient moisture in the material. The Contractor shall grade the carriageway to control roughness and corrugations using either a Towed or a Motor grader. The width of the carriageway shall be as specified for the Road Class.

Pegs 200 to 300mm long shall be placed at 20 m intervals to mark edge of the carriageway

The material shall be bladed toward the centre of the road, starting from both edges, to the specified camber. Where instructed by the Engineer, suitable materials from the side drains may be used to fill potholes and gullies in the carriageway. Any further material needed to re-form the camber shall be from an approved source. Compaction shall be achieved using the wheels of the equipment, tracked evenly over the full surface, or by other approved means.

No grading shall be carried out in dry conditions.

The Contractor shall use **Equipment** to carry out this item.

Work Method: **MB**

Quality Control

- The width of the carriageway shall be checked at every 50m intervals and have a tolerance of +50mm or -20mm
- The camber shall be checked with a camber board at 25m intervals and shall have a tolerance of + 1%
- Longitudinal levels shall be checked with a straight edge of minimum 2.7 m length. Maximum tolerance of +10 mm.

Measurement Unit: m2

The measurement shall be the area of carriageway graded, measured net according to the specified width and measured length graded.

Payment

The unit rate shall be the full compensation for labour, tools, equipment and incidental costs required for carrying out the work.

10-50-004: Light Manual Reshaping (Grub edge, fill gullies and Reshape carriageway)

This activity involves trimming the edge of the carriageway, grubbing grass from the carriageway filling gullies and ruts on the carriageway and reshaping of the camber of the road to the original standard and shape. No grass shall be grubbed from the shoulders, but it shall be cut to a maximum height of 50mm.

For earth roads materials from the side drains may be used to reshape the carriageway and fill gullies. Where additional suitable material is required to reinstate the camber to the required shape, this material

shall be obtained from approved sources nearest to the final deposition area.

For gravel roads the gravel shall be obtained from the stacks placed at intervals along the road for this purpose if applicable.

The fill material shall be watered, mixed and compacted using suitable tampers to a finished level 25mm above the surrounding road surface.

This activity shall be carried out before and after the rains, or as directed by the Engineer.

The Contractor shall apply **Labour** methods to carry out this item.

Work Method: **LB**

Quality Control

- The width of the carriageway including the shoulders shall be checked at 100m intervals with tolerance of +50mm or -20mm
- The camber shall be checked using camber board at 50m intervals and shall have a tolerance of + 1%
- The quality of fill material shall be approved by the Engineer
- The minimum compaction to be applied to fill areas shall be such that no rammer imprint on the surface shall be seen.

Measurement Unit: m2

The measurement shall be the area of carriageway shaped.

Payment

The unit rate shall be the full compensation for labour, tools and incidental costs required for carrying out the work.

10-60-001: Provide Gravel Wearing Course (Excavation, Free haul, spreading and Compaction of Gravel)

Excavation of Gravel

Gravel shall be excavated from quarries approved by the Engineer, and the Contractor shall inform the Engineer if the quality/availability of the gravel changes during the course of excavation.

Stones and boulders with one dimension greater than 80mm shall be removed from the excavated gravel and deposited outside the quarry at locations approved by the Engineer. Such stones and boulders may be reused in other parts of Works with the approval of the Engineer.

Excavation and loading shall normally be by labour unless, at the request of the Contractor, the Engineer allows the use of equipment.

The Contractor shall use **Labour** and/or **Equipment** to carry out this work, as directed by the Engineer.

Work Method: LB or MB

Quality Control:

- Oversize stones and boulders shall not be loaded for haulage to the road.
- Areas containing deleterious material shall not be excavated.

Free haul, spreading and Compaction of Gravel

Free haul involves the transportation of gravel material for the first 1.5 km from the quarry. The Contractor shall spread and compact gravel material, in a manner to ensure a uniform thickness of the layer across the full width of the carriageway and shaped to the specified camber. Spreading also includes the removal of any oversized stones or boulders, which cannot be broken down to the required size, to spoil dumps. Gravel shall be spread within 24 hours of off-loading.

Compaction of the gravel material shall be carried out from the carriageway edges to the centerline by overlapping passes of the compaction equipment. The number of passes shall be as directed by the Engineer dependent upon the equipment used and the material being compacted. Unless otherwise instructed the moisture content of the material shall be within + 2% of optimum

Where additional moisture is required water shall be applied in an even manner and the rate of application shall be such that no transverse or longitudinal flows occur.

The Engineer may instruct the Contractor to carry out density tests on the compacted material to ensure that an acceptable standard has been achieved.

The Contractor shall use **Equipment** for haulage and Labour for spreading unless the Engineer instructs otherwise.

Work Method: **LB-MB**

Quality Control:

- The gravel surface width shall be checked at 100m intervals and shall have a tolerance of
- +50mm
- Trial holes shall be dug as directed by the Engineer to check the gravel thickness and shall have a tolerance of + 5mm / - 0mm
- The camber shall be checked at 50m intervals and the maximum tolerance shall be +1 %
- The longitudinal profile shall be checked after the compaction of each load to ensure a smooth surface with no corrugations or depressions, tolerance of + 10mm.
- Compaction shall show no movement of material under the roller, minimum of 6 passes.
- Compaction test standard shall be 95% MDD (AASHTO T180)

Measurement Unit: m3

The measurement shall be the volume of compacted gravel surfacing measured net according to the Drawings and shall include the excavation and the 1.5km ‘free’ haul distance

Payment

The unit rate shall be the full compensation for labour, tools, equipment and incidental costs required for carrying out the work.

10–60- 002: Haulage (Overhaul beyond 1.5km)

The Contractor shall haul by appropriate equipment and off-load on the road as directed by the Engineer. Where the quantity delivered in any load falls short of the equipment capacity, off-loading shall only be permitted after the agreed spacing is adjusted accordingly.

No vehicle with a capacity of greater than 10 tonnes shall be permitted to off-load gravel directly on the prepared formation unless approved by the Engineer. Any greater loads shall be dumped in stockpiles off-road and transported to the formation areas by appropriate means.

Where loads supplied are found to contain material other than from the approved quarry and are of unacceptable quality, the Contractor shall remove them from site at the Contractor's expense.

The Contractor shall use **Equipment** to carry out this Item.

Work Method: **MB**

Quality Control:

- No haulage equipment shall be used until its capacity has been ascertained by the Engineer
- The quality of gravel dumped on the road shall be according to the Specifications
- The quantity of material delivered in each load shall be checked before dumping is allowed
- The distance between the stacks shall be checked to ensure the required compacted thickness will be achieved.

Measurement Unit: m3km (Overhaul)

The Contractor shall allow in the rates for item 10-60-001 for a 'free' haul distance of 1.5km. The 'overhaul' shall be the distance, greater than 1.5km, to the centre point of the section where the gravel is being dumped and processed, measured along the shortest route as determined by the Engineer.

The measurement of overhaul shall be the product of the volume of the gravel hauled and the distance to the centre point as indicated above.

Payment

The unit rate shall include full compensation for labour, tools, equipment, and incidental costs necessary to carry out the work.

10-60-004 Gravel Patching (Excavation, Free haul, Spreading and Compaction of Gravel)

Excavation of Gravel

Gravel shall be excavated from quarries approved by the Engineer, and the Contractor shall inform the Engineer if the quality/availability of the gravel changes during the course of excavation.

Stones and boulders with one dimension greater than 80mm shall be removed from the excavated gravel and deposited outside the quarry at locations approved by the Engineer. Such stones and boulders may be reused in other parts of Works with the approval of the Engineer.

Excavation and loading shall normally be by labour unless, at the request of the Contractor, the Engineer allows the use of equipment.

The Contractor shall use **Labour** and/or **Equipment** to carry out this work, as directed by the Engineer.

Work Method: **LB or MB**

Quality Control:

- Oversize stones and boulders shall not be loaded for haulage to the road.
- Areas containing deleterious material shall not be excavated.

Free haul, preparation, spreading and Compaction of Gravel

Free haul involves the transportation of gravel material for the first 1.5 km from the quarry. The Contractor shall prepare the area to be patched by removing excessive water and loose material. The

contractor shall then dump, spread and compact gravel material, in a manner to ensure a uniform thickness of the layer across the full width of the carriageway and shaped to the specified camber. Spreading also includes the removal of any oversized stones or boulders, which cannot be broken down to the required size, to spoil dumps. Gravel shall be spread within 24 hours of off-loading.

Compaction of the gravel material shall be carried by overlapping passes of the compaction equipment. The number of passes shall be as directed by the Engineer dependent upon the equipment used and the material being compacted. Unless otherwise instructed the moisture content of the material shall be within + 2% of optimum

Where additional moisture is required water shall be applied in an even manner and the rate of application shall be such that no transverse or longitudinal flows occur.

The Engineer may instruct the Contractor to carry out density tests on the compacted material to ensure that an acceptable standard has been achieved.

The Contractor shall use **Equipment** for haulage and **Labour** for spreading unless the Engineer instructs otherwise.

Work Method: **LB-MB**

Quality Control:

- The gravel surface width shall be checked at 100m intervals and shall have a tolerance of
- + 50mm
- Trial holes shall be dug as directed by the Engineer to check the gravel thickness and shall have a tolerance of + 5mm / - 20mm
- The camber shall be checked at 50m intervals and the maximum tolerance shall be + 1 %
- The longitudinal profile shall be checked after the compaction of each load to ensure a smooth surface with no corrugations or depressions, tolerance of + 10mm.
- Compaction shall show no movement of material under the roller, minimum of 6 passes.
- Compaction test standard shall be 95% MDD (AASHTO T180)

Measurement Unit: m3

The measurement shall be the volume of compacted gravel surfacing measured net according to the Drawings and shall include the excavation and the 1.5km ‘free’ haul distance

Payment

The unit rate shall be the full compensation for labour, tools, equipment and incidental costs required for carrying out the work.

10-70-001: Site clearance of borrow area.

This activity should be done in accordance with Bill 4, sub clauses 4.01 to 4.05 in the Standard Specifications for Roads and Bridges 1986.

10-70-002: Removal of Overburden

The Contractor shall remove overburden from quarries and borrow pits, which includes excavation, loading, hauling and stockpiling at approved locations. The thickness of the overburden layer to be removed shall be determined from trial pits dug on a 30 metre grid within the quarry area.

The overburden shall be deposited neatly for re-use to reinstate the quarry on completion of the Works, as directed by the Engineer.

The Contractor shall use **Labour** to carry out this item unless the Engineer instructs otherwise.

Work Method: **LB or MB**

Quality Control

- The location and manner of stock piling of the overburden for the reinstatement of the quarry shall be to the approval of the Engineer.

Measurement Unit: m3

The measurement shall be the volume of overburden removed as calculated from the cleared area and the mean depth indicated from the trial pits.

Payment

The unit rate shall include full compensation for labour, tools materials and equipment, haulage, stockpiling and incidental costs required for carrying out the work.

10-70-003: Restoration of Quarries and Borrow Pits

The Contractor shall level the ground, return the topsoil from the stockpiles, and uniformly spread the material over the full excavation area.

Adequate drainage provisions shall be made to protect the excavation areas, and where necessary appropriate protection measures shall be taken to avoid erosion of the spread topsoil layer. Grass and trees shall be replanted as directed by the Engineer.

The Contractor shall use **Labour** and/or **Equipmen**t to carry out this item as agreed by the Engineer.

Work Method: **LB, LM-MB**

Quality Control

The Engineer shall check that the required measurements have been satisfactorily taken.

Measurement and Payment: Provisional Sum

Payment shall be made on a Dayworks basis for the labour and equipment as directed by the Engineer

BILL 17: Concrete Works

17-50-001: Bridge Deck Replacement - Concrete
17-50-002: Bridge Abutment Repair – Concrete

These activities involve the repair or replacement of concrete bridge deck and abutment, including the removal of loose or broken concrete, cutting back damaged areas to sound surfaces and repairing with concrete of similar Class to the original.

The bridge deck and abutment shall be inspected and necessary repairs shall be instructed by the Engineer. All Holes and voids shall be cleared of debris, loose material and dust, and shall be well watered before the new concrete is placed. The new concrete shall be firmly rammed against the existing surfaces and finished flush with the surrounding materials. The surface of the repair shall be protected from direct sunlight and kept moist for 3 days. Concrete shall be Class 20/20 unless otherwise directed by the Engineer.

In the event of complete replacement of the abutment and deck, the activity shall be carried in

accordance with Section 17 Sub Clauses 1701 to 1741 of the Standard Specifications for Road and Bridge Construction.

The Contractor shall use **Labour** to carry out this item

Work Method **LB**

Quality Control

The work shall be carried out to the satisfaction of the Engineer.

Measurement Unit: m3

The measurement shall be the volume of concrete used for the repair.

Payment:

The unit rate shall be the full compensation for labour, tools, materials and incidental costs required to carry out the work.

17-50-003: Bridge Abutment Repair - Masonry

This activity involves the repair of masonry bridge abutment, including the removal of loose or broken stones and then repairing the damaged parts with similar size stones using mortar of 1:4(cement: sand by volume)..

The abutrment shall be inspected and necessary repairs shall be instructed by the Engineer. All loose stones shall be removed and replaced afresh. The stones shall be laid with a bond allowing a minimum overlap of ¼ the length of the smallest stone. The joints shall be a minimum of 10mm and no stone shall touch another stone but shall be laid fully on a mortar bed. The mortar joints on the face of the abutment shall be painted and raked to produce a durable finish.

The Contractor shall use **Labour** to carry out this item

Work Method **LB**

Quality Control

The work shall be carried out to the satisfaction of the Engineer.

Measurement Unit: m3

The measurement shall be the abutment repaired.

Payment:

The unit rate shall be the full compensation for labour, tools, materials and incidental costs required to carry out the work.

17-50-004: Drift Repairs – Concrete

This activity involves the repair of concrete drifts, including the removal of loose or broken concrete, cutting back damaged areas to sound surfaces and repairing with concrete of similar Class to the original.

The drift shall be inspected and necessary repairs shall be instructed by the Engineer. Holes and voids shall be cleared of debris, loose material and dust, and shall be well watered before the new concrete is placed. The new concrete shall be firmly rammed against the existing surfaces and finished flush with

the surrounding materials. The surface of the repair shall be protected from direct sunlight and kept moist for 3 days. Concrete shall be Class 20/20 unless otherwise directed by the Engineer.

The Contractor shall use **Labour** to carry out this item

Work Method **LB**

Quality Control

The work shall be carried out to the satisfaction of the Engineer.

Measurement Unit: m3

The measurement shall be the volume of concrete used for the repair.

Payment:

The unit rate shall be the full compensation for labour, tools, materials and incidental costs required to carry out the work.

17-60-001: Provide, place and compact class 15/20 concrete for blinding
17-60-002: Provide, place and compact class 25/20 concrete
17-60-003: Vertical formwork class F2 finish
17-60-004: Horizontal formwork class F2 finish
17-60-005: Provide, cut, bend and fix into position high yield reinforcement bar to BS 44461 as directed and as shown on the drawing

These activities should be done in accordance with Bill 17 sub section 17.01 to 17.41 of the Standard Specifications for Roads and Bridges 1986.

17-70-001: Drift Construction by contract
17-70-002: Bridge Construction by contract

The activities for these items will be defined in a separate specific document and only summarised under these item numbers.

17-70-003: Concrete Road Section

The Contractor shall construct the concrete road carriageway on the prepared, shaped and compacted road formation as approved by the Engineer. Concrete shall be class 20/20 and may be batched by volume, but shall be mixed in a mechanical mixer. The mix shall be as shown below.

Concrete Class	Nominal Mix by Volume	Batch with 1 bag Cement		
		No. of boxes		
		Fine	Coarse	Yield (approx)
20/20	1:2:4 (20mm max aggregate)	2	4	0.16m^3

The water added shall be the minimum necessary to give sufficient workability for efficient consolidation of the concrete. For concrete placed by hand this shall be 23-27 litres per bag of cement. For mechanical mixing and compacting (poker vibrator) the water content shall be reduced to 20 litres per bag of cement.

The concrete shall be placed in formwork which is clean, smooth faced and secure from movement and leakage to the full depth of the carriageway (150mm) in clearly marked out bays. Steel reinforcing mesh mats (6mm) shall be laid at a depth 50mm below the finished surface as the concrete is being

poured. Compaction of the concrete shall be by hand ramming or poker vibrator. The surface shall be tamped with a timber tamping bar to produce a uniform, transverse ridged surface.

Concrete pours shall normally be over half the carriageway width and in lengths between construction joints as directed by the Engineer, of 10-15 metres. Contraction joints if required shall correspond with the construction joints. Where directed by the Engineer expansion joints shall be formed in positions and in accordance with the details provided by the Engineer.

The surface of the concrete shall be covered and kept moist for at least 4 days to allow adequate curing. The Contractor shall make cubes for testing as directed by the Engineer.

All materials used for concrete production and the Contractor's working method shall be approved by the Engineer before concreting is permitted.

The Contractor shall use **Labour** and **Equipment** to carry out this item.

Work Method **LB - MB**

Quality Control

Slump test shall be to the standard specified by the Engineer in the range of 25-100mm. Cube strength shall be 27.5 N/mm2 at 28 days on an average of 4 cubes

Measurement Unit: m3

The measurement shall be the volume of concrete measured net according to the Drawings

Payment

The unit rate shall include full compensation for labour, tools, equipment, materials and incidental costs necessary to carry out the work.

BILL 20: ROAD FURNITURE

Scope:

This bill comprises those items of Road Furniture to be erected and maintained as aids to road safety, including traffic signs and guardrails.

20-50-001: Road reserve boundary posts
20-50-002: Installation of fencing and gates
20-50-003: Repair/replace fence

These activities should be done in accordance with Bill 20 sub section 20.01 to 20.11 of the Standard Specifications for Roads and Bridges 1986.

20-50-005: Permanent Road Signs

The Contractor shall erect road / traffic signs of the type and at locations as directed by the Engineer. The signs materials and quality are shown on the Drawings. The signs shall be bedded in concrete Class 15/20 and shall be supported vertically until the concrete is set.

The Contractor shall use **Labour** to carry out this item.

Work Method. **LB**

Quality Control

The Engineer shall check the sign position before concrete is backfilled.

Measurement Unit: No

The measurement shall be the number of signs erected.

Payment

The unit rate shall be the full compensation for labour, tools, materials and incidental costs required for carrying out the work.

20-50- 008: Guardrail Repair

This activity involves the repair of Guardrails (including rails, posts and fixings) to a properly aligned, vertical and secure condition. The repair shall include securing any loose posts by re-compaction or removal of any unsuitable material surrounding the post, importing and compaction of suitable materials to render the posts secure, and the re-fixing of the rails.

The Contractor shall use **Labour** to carry out this item.

Work Method **LB**

Quality Control

The guardrails shall be checked as being properly aligned secure and in a vertical position
The fixings shall be hand checked to be firmly fixed

Measurement Unit: m

The measurement shall be the length of Guardrail repaired

Payment

The unit rate shall be the full compensation for labour, material, tools, and incidental costs required to carry out the work.

20-50-009: Guard Rail Replacement
20-50-010: Guard Rail Installation

The Contractor shall erect guardrails at locations shown on the Drawings or as directed by the Engineer. The guardrails shall comply with the requirements of the Road Authority and shall be erected on hard wood or treated timber posts of top diameter not less than 150mm.

Posts shall be drilled and shaped as shown on the Drawings and provided with the necessary bolts, nuts, washers and spacer blocks.

Holes excavated for the timber posts shall be spaced to suit the standard length of guardrail supplied, and shall be of sufficient size to permit the proper setting of the posts and to allow room for backfilling and compacting. At least 1 metre of a post shall be embedded in the ground. The backfilling shall be with 12:1 soil cement mixture, or as otherwise directed by the Engineer, after the erected rails have been approved by the Engineer.

The Contractor shall use **Labour** to carry out this item.

Work Method **LB**

Quality Control

The Engineer shall check the post and rail erection before final backfilling.

Measurement Unit: m

The measurement shall be the length of Guardrail erected.

Payment

The unit rate shall be the full compensation for labour, tools, materials and incidental costs required for carrying out the work.

20-50-011: Handrail repair/installation

These activities should be done in accordance with Bill 20 sub section 20.01 to 20.11 of the Standard Specifications for Roads and Bridges 1986.

20-60-001: Traffic Sign Maintenance

This activity involves all the tasks required to ensure that the road signs and signposts are in a clean, properly aligned, vertical and secure condition; the replacement of missing or broken bolts, nuts or other fixings and the tightening of the same. The maintenance shall also extend to securing any loose posts by the re-compacting or removal of any unsuitable material surrounding the posts, importing and compacting of suitable material to render the post secure. Painting of the Traffic signs if required is also included in this item.

The Contractor shall use **Labour** to carry out this item.

Work Method **LB**

Quality Control

The signs shall be clean and in vertical position
The fixings shall be hand checked to be tight

Measurement Unit: No.

The measurement shall be number of signs maintained.

Payment

The unit rate shall be the full compensation for labour, tools, material and incidental costs required to carry out the work.

BILL 22: DAYWORKS

ITEMS 22-50-001 to 22-79-018 are for the Schedule of Rates. The Engineer will include the relevant items for each specific contract document.

A Provisional Sum shall be included in the Bills of Quantities to cover the payment of equipment, labour and materials for work instructed by the Engineer on a Dayworks basis.

The Contractor shall include prices for all items in the Schedule of Rates, in the Dayworks Bill, and shall carry out work using these rates only if directed by the Engineer.

Measurement and Payment

a. Equipment:

Payment for equipment shall only be made for the time each item of equipment is working. Idle time due to breakdown or incompleteness of the equipment shall not be paid. The rate of equipment shall include for the cost of the following: -

i. Transport of the equipment to the site
ii. Operators, drivers and assistants including their overtime
iii. Fuels and lubricants
iv. Maintenance, spare parts and all costs of repairs
v. Depreciation, insurance, overheads and profits.

b. Labour

Payment shall only be made for the time each of worker working on the Dayworks as instructed by the Engineer. The rate for labour shall include the cost of,

i. All wages, allowances and other payments due to the worker
ii. Provision of small tools used on Dayworks activities by labourers and tradesmen.
iii. Insurance, overheads and profit.

c. Materials

Payment shall only be made for materials instructed by the Engineer for use in Dayworks activities. The rate for materials shall include for the cost of provision of the material, transport to site, storage, handling, overheads and profits.

Schedule of Dayworks

The Engineer shall compile a Schedule of the Equipment, Labour and Materials which may apply to Dayworks activities, to be included in the Dayworks Bill.

BILL 25: HIV/AIDS AWARENESS AND PREVENTION CAMPAIGN

This BILL sets out the Contractor's obligations with regard to on-site HIV / AIDS awareness campaign and preventive measures that are to be instituted.

25-50-001 HIV / AIDS Awareness and Prevention Campaign

The Contractor shall institute an HIV / AIDS awareness and prevention campaign amongst his workers for the duration of the Contract. The awareness campaigns shall be carried out in consultation and guidance of Ministry of Public Health or Local service providers approved by the Ministry of Public Health.

The Contractor shall display AIDS awareness posters in all buildings frequented by workers employed on the Contract, where such buildings fall under the control of the Contractor.

In addition at least two of the Contractors vehicles regularly used on site shall display HIV / AIDS awareness posters. The posters shall be printed on gloss paper and shall be at least A1 size on buildings and A3 size or other approved size on vehicles. The message on the posters shall be supplied by the Employer through the Engineer.

Aids awareness shall also be included in the orientation process of all workers employed on the Contract.

As part of the campaign the Contractor will be required to make condoms available to his workers.

Measurement Unit: month

The measurement shall be the calendar month or part thereof, measured over the duration of the campaign.

Payment:

The rate shall include full compensation for equipment; labour and material required for the provision of the item.

25-50-002 Soil Erosion Mitigation Measures

Soil Erosion problems must be identified and appropriate mitigation measures included during the preparation of the contract document. However the Engineer shall provide a Provisional Sum for Soil Erosion Mitigation Measures that were foreseen during the preparation of the document.

Measurement

A Provisional Sum shall be included in the Bill of Quantities for this item.

25-50-003 Baraza's for Cross-cutting Issues

The Contractor shall arrange and conduct meetings and/or training sessions for workers and staff on cross-cutting issues, including Community Participation, Environmental Mitigation, Gender Rights, HIV/AIDS, Workers Rights at times and locations directed by the Engineer.

Measurement

A Provisional Sum shall be included in the Bill of Quantities for this item payable on documented expenditure.

SECTION VII - BILLS OF QUANTITIES

PREAMBLE TO BILL OF QUANTITIES

1. The Bills of Quantities forms part of the Contract Documents and are to be read in conjunction with the Instructions to Bidders, Conditions of Contract Parts I and II, Specifications and Drawings.

2. The brief description of the items in the Bills of Quantities is purely for the purpose of identification, and in no way modifies or supersedes the detailed descriptions given in the conditions of Contract and Specifications for the full direction and description of work and materials.

3. The Quantities set forth in the Bills of Quantities are estimated, representing substantially the work to be carried out, and are given to provide a common basis for bidding and comparing of Bids. There is no guarantee to the Contractor that he will be required to carry out all the quantities of work indicated under any one particular item or group of items in the Bill of Quantities. The basis of payment shall be the Contractor's rates and the quantities of work actually done in fulfilment of his obligation under the Contract.

4. Payments for emergency and/or instructed works will be paid as and when they occur using submitted rates and/or day works and shall require prior approval of the Employer.

5. The prices and rates inserted in the Bills of Quantities will be used for valuing the work executed, and the Engineer will only measure the whole of the works executed in accordance with this Contract.

6. A price or rate shall be entered in ink against every item in the Bills of Quantities with the exception of items that already have Provisional sums affixed thereto. The bidders are reminded that no “nil” or “included” rates or “lump-sum” discounts will be accepted. The rates for various items should include discounts if any. Bidders who fail to comply will be disqualified.

7. Provisional sums (including Day-works) in the Bills of Quantities shall be expended in whole or in part at the discretion of the Engineer.

8. The price and rates entered in the Bills of Quantities shall, except in-so-far as it is otherwise provided under the Contract, include all Constructional plant to be used, labour, insurance, supervision, compliance testing, materials, erection, maintenance of works, overheads and profits, taxes and duties together with all general risks, liabilities and obligations set out or implied in the Contract, transport, electricity and telephones, water, use and replenishment of all consumables, including those required under the contract by the Engineer and his staff.

9. Unless otherwise stated, all measurements shall be net taken on the finished work carried out in accordance with the details shown on the drawings or instructed, with no allowance for extra cuts or fills, waste or additional thickness necessary to obtain the minimum finished thickness or dimensions required in this Contract. Any work performed in excess or the requirements of the plans and specifications will not be paid for, unless ordered in writing by the Engineer.

10. Unbalanced tenders and/or unrealistic rates shall lead to the tenderer being subjected to enhanced Perfomance Security requirements pursuant to Instruction to Tnderers section 38.2 (b) of Tender Data Sheets.

contract Name	**KeRRA/KTI/008/039/130/2025-2026**			**Kitui**		
BILL OF QUANTITIES				**2025-26**		
Activity Group Title		**Road Code**		C426		
Contractor		**Section Name**		**Mutito - Syombandu - Masasini**		

Bill No.	ITEM CODE	DESCRIPTION	Quantity	UNIT	Unit Bid RATE (KShs)	Bill Item Cost without VAT (KSHs)	Technology
1	01-80-016	Provide and erect publicity signs as directed by the Engineer	1.00	NO.	-	-	LB-MB
4	04-60-001	Clear site on road reserve including removal of trees, hedges, bushes and other vegetation or deterious organic material, grub up roots and back fill to 100% MDD (AASHTO T99) with approved material in accordance with the specification	3.50	Ha	-	-	LB-MB
8	08-60-025	Culvert Installation 600 mm with surround	12.00	METER	-	-	LB
8	08-60-027	Culvert Installation 900 mm with surround	30.00	METER	-	-	LB
8	08-60-030	Excavate in soft material for culverts	78.00	M^3	-	-	LB
10	10-50-001	Heavy grading without watering or compaction instructed by the Engineer	70,000.00	M^2	-	-	MB
10	10-60-001	Provide gravel wearing course-excavation,free haul, spread, water and compact gravel to specifications	967.34	M^3	-	-	MB
		Sub Total					
		Contingencies @ 0%					
		Total					
		Public Procurement Levy @ 0.03%					
		VAT @ 16%					
		Grand Total					

PART III - CONDITIONS OF CONTRACT AND CONTRACT FORMS

SECTION VIII - GENERAL CONDITIONS OF CONTRACT

These General Conditions of Contract (GCC), read in conjunction with the Special Conditions of Contract (SCC) and other documents listed therein, should be a complete document expressing fairly the rights and obligations of both parties.

These General Conditions of Contract have been developed on the basis of considerable international experience in the drafting and management of contracts, bearing in mind a trend in the construction industry towards simpler, more straightforward language.

The GCC can be used for both smaller admeasurement contracts and lump sum contracts.

General Conditions of Contract

A. General

1. Definitions

1.1 Bold face type is used to identify defined terms.

a) **The Accepted Contract** Amount means the amount accepted in the Letter of Acceptance for the execution and completion of the Works and the remedying of any defects.

b) **The Activity Schedule** is a schedule of the activities comprising the construction, installation, testing, and commissioning of the Works in a lump sum contract. It includes a lump sum price for each activity, which is used for valuations and for assessing the effects of Variations and Compensation Events.

c) **The Adjudicator** is the person appointed jointly by the Procuring Entity and the Contractor to resolve disputes in the first instance, as provided for in GCC 23.

d) **Bill of Quantities** means the priced and completed Bill of Quantities forming part of the Bid.

e) **Compensation Events** are those defined in GCC Clause 42 hereunder.

f) **The Completion Date** is the date of completion of the Works as certified by the Project Manager, in accordance with GCC Sub-Clause 53.1.

g) **The Contract** is the Contract between the Procuring Entity and the Contractor to execute, complete, and maintain the Works. It consists of the documents listed in GCC Sub-Clause 2.3 below.

h) **The Contractor** is the party whose Bid to carry out the Works has been accepted by the Procuring Entity.

i) **The Contractor's Bid** is the completed bidding document submitted by the Contractor to the Procuring Entity.

j) **The Contract Price** is the Accepted Contract Amount stated in the Letter of Acceptance and thereafter as adjusted in accordance with the Contract.

k) **Days** are calendar days; months are calendar months.

l) **Day work**s are varied work inputs subject to payment on a time basis for the Contractor's employees and Equipment, in addition to payments for associated Materials and Plant.

m) **A Defect** is any part of the Works not completed in accordance with the Contract.

n) **The Defects** Liability Certificate is the certificate issued by Project Manager upon correction of defects by the Contractor.

o) **The Defects Liability Period** is the period **named in the SCC** pursuant to Sub-Clause 34.1 and calculated from the Completion Date.

p) **Drawings** means the drawings of the Works, as included in the Contract, and any additional and modified drawings issued by (or on behalf of) the Procuring Entity in accordance with the Contract, include calculations and other information provided or approved by the Project Manager for the execution of the Contract.

q) **The Procuring Entity** is the party who employs the Contractor to carry out the Works, **as specified in the SCC,** who is also the Procuring Entity.

r) **Equipmen**t is the Contractor's machinery and vehicles brought temporarily to the Site to construct the Works.

s) **"In writing" or "written"** means hand-written, type-written, printed or electronically made, and resulting in a permanent record;

t) The Initial Contract Price is the Contract Price listed in the Procuring Entity's Letter of Acceptance.

u) **The Intended Completion Date** is the date on which it is intended that the Contractor shall complete the Works. The Intended Completion Date is **specified in the SCC**. The Intended Completion Date may be revised only by the Project Manager by issuing an extension of time or an acceleration order.

v) **Materials** are all supplies, including consumables, used by the Contractor for incorporation in the Works.

w) **Plant i**s any integral part of the Works that shall have a mechanical, electrical, chemical, or biological function.

x) **The Project Manager** is the person **named in the SCC** (or any other competent person appointed by the Procuring Entity and notified to the Contractor, to act in replacement of the Project Manager) who is responsible for supervising the execution of the Works and administering the Contract.

y) **SCC** means Special Conditions of Contract.

z) **The Site** is the area of the works as **defined as such in the SCC**.

aa) **Site Investigation Reports** are those that were included in the bidding document and are factual and interpretative reports about the surface and subsurface conditions at the Site.

bb) **Specification** means the Specification of the Works included in the Contract and any modification or addition made or approved by the Project Manager.

cc) **The Start Date** is **given in the SCC**. It is the latest date when the Contractor shall commence execution of the Works. It does not necessarily coincide with any of the Site Possession Dates.

dd) **A Subcontractor** is a person or corporate body who has a Contract with the Contractor to carry out a part of the work in the Contract, which includes work on the Site.

ee) **Temporary Works** are works designed, constructed, installed, and removed by the Contractor that are needed for construction or installation of the Works.

ff) **A Variation** is an instruction given by the Project Manager which varies the Works.

gg) **The Works** are what the Contract requires the Contractor to construct, install, and turn over to the Procuring Entity, **as defined in the SCC**.

2. Interpretation

2.1 In interpreting these GCC, words indicating one gender include all genders. Words indicating the singular also include the plural and words indicating the plural also include the singular. Headings have no significance. Words have their normal meaning under the language of the Contract unless specifically defined. The Project Manager shall provide instructions clarifying queries about these GCC.

2.2 If sectional completion is specified in the SCC, references in the GCC to the Works, the Completion Date, and the Intended Completion Date apply to any Section of the Works (other than references to the Completion Date and Intended Completion Date for the whole of the Works).

2.3 The documents forming the Contract shall be interpreted in the following order of priority:

a) Agreement,
b) Letter of Acceptance,
c) Contractor's Bid,
d) Special Conditions of Contract,
e) General Conditions of Contract, including Appendices,
f) Specifications,
g) Drawings,
h) Bill of Quantities[6], and
i) any other document **listed in the SCC** as forming part of the Contract.

[6] *In lump sum contracts, delete "Bill of Quantities" and replace with "Activity Schedule."*

3. Language andLaw

3.1 The language of the Contract is English Language and the law governing the Contract are the Laws of Kenya.

3.2 Throughout the execution of the Contract, the Contractor shall comply with the import of goods and services prohibitions in the Procuring Entity's Country when

a) as a matter of law or official regulations, Kenya prohibits commercial relations with that country; or

b) by an act of compliance with a decision of the United Nations Security Council taken under Chapter VII of the Charter of the United Nations, Kenya prohibits any import of goods from that country or any payments to any country, person, or entity in that country.

4. Project Manager's Decisions

4.1 Except where otherwise specifically stated, the Project Manager shall decide contractual matters between the Procuring Entity and the Contractor in the role representing the Procuring Entity.

5. Delegation

5.1 Otherwise **specified in the SCC,** the Project Manager may delegate any of his duties and responsibilities to other people, except to the Adjudicator, after notifying the Contractor, and may revoke any delegation after notifying the Contractor.

6. Communications

6.1 Communications between parties that are referred to in the Conditions shall be effective only when in writing. A notice shall be effective only when it is delivered.

7. Subcontracting

7.1 The Contractor may subcontract with the approval of the Project Manager, but may not assign the Contract without the approval of the Procuring Entity in writing. Subcontracting shall not alter the Contractor's obligations.

8. Other Contractors

8.1 The Contractor shall cooperate and share the Site with other contractors, public authorities, utilities, and the Procuring Entity between the dates given in the Schedule of Other Contractors, as **referred to in the SCC.** The Contractor shall also provide facilities and services for them as described in the Schedule. The Procuring Entity may modify the Schedule of Other Contractors, and shall notify the Contractor of any such modification.

9. Personnel andEquipment

9.1 The Contractor shall employ the key personnel and use the equipment identified in its Bid, to carry out the Works or other personnel and equipment approved by the Project Manager. The Project Manager shall approve any proposed replacement of key personnel and equipment only if their relevant qualifications or characteristics are substantially equal to or better than those proposed in the Bid.

9.2 If the Project Manager asks the Contractor to remove a person who is a member of the Contractor's staff or work force, stating the reasons, the Contractor shall ensure that the person leaves the Site within seven days and has no further connection with the work in the Contract.

9.3 If the Procuring Entity, Project Manager or Contractor determines, that any employee of the Contractor be determined to have engaged in Fraud and Corruption during the execution of the Works, then that employee shall be removed in accordance with Clause 9.2 above.

10. Procuring Entity's and Contractor's Risks

10.1 The Procuring Entity carries the risks which this Contract states are Procuring Entity's risks, and the Contractor carries the risks which this Contract states are Contractor's risks.

11. Procuring Entity's Risks

11.1 From the Start Date until the Defects Liability Certificate has been issued, the following are Procuring Entity's risks:

a) The risk of personal injury, death, or loss of or damage to property (excluding the Works, Plant, Materials, and Equipment), which are due to

i) use or occupation of the Site by the Works or for the purpose of the Works, which is the unavoidable result of the Works or

ii) negligence, breach of statutory duty, or interference with any legal right by the Procuring Entity or by any person employed by or contracted to him except the Contractor.

b) The risk of damage to the Works, Plant, Materials, and Equipment to the extent that it is due to a fault of the Procuring Entity or in the Procuring Entity's design, or due to war or radioactive contamination directly affecting the country where the Works are to be executed.

11.2 From the Completion Date until the Defects Liability Certificate has been issued, the risk of loss of or damage to the Works, Plant, and Materials is a Procuring Entity's risk except loss or damage due to

aa) a Defect which existed on the Completion Date,

bb) an event occurring before the Completion Date, which was not itself a Procuring Entity's risk, or

cc) the activities of the Contractor on the Site after the Completion Date.

12. Contractor's Risks

12.1 From the Starting Date until the Defects Liability Certificate has been issued, the risks of personal injury, death, and loss of or damage to property (including, without limitation, the Works, Plant, Materials, and Equipment) which are not Procuring Entity's risks are Contractor's risks.

13. Insurance

13.1 The Contractor shall provide, in the joint names of the Procuring Entity and the Contractor, insurance cover from the Start Date to the end of the Defects Liability Period, in the amounts and deductibles **stated in the SCC** for the following events which are due to the Contractor's risks:

a) loss of or damage to the Works, Plant, and Materials;

b) loss of or damage to Equipment;

c) loss of or damage to property (except the Works, Plant, Materials, and Equipment) in connection with the Contract; and

d) personal injury or death.

13.2 Policies and certificates for insurance shall be delivered by the Contractor to the Project Manager for the Project Manager's approval before the Start Date. All such insurance shall provide for compensation to be payable in the types and proportions of currencies required to rectify the loss or damage incurred.

13.3 If the Contractor does not provide any of the policies and certificates required, the Procuring Entity may effect the insurance which the Contractor should have provided and recover the premiums the Procuring Entity has paid from payments otherwise due to the Contractor or, if no payment is due, the payment of the premiums shall be a debt due.

13.4 Alterations to the terms of an insurance shall not be made without the approval of the Project Manager.

13.5 Both parties shall comply with any conditions of the insurance policies.

14. Site Data

14.1 The Contractor shall be deemed to have examined any Site Data **referred to in the SCC**, supplemented by any information available to the Contractor.

15. Contractor to Construct the Works

15.1 The Contractor shall construct and install the Works in accordance with the Specifications and Drawings.

16. The Works to Be Completed by the Intended Completion Date

16.1 The Contractor may commence execution of the Works on the Start Date and shall carry out the Works in accordance with the Program submitted by the Contractor, as updated with the approval of the Project Manager, and complete them by the Intended Completion Date.

17. Approval by the Project Manager

17.1 The Contractor shall submit Specifications and Drawings showing the proposed Temporary Works to the Project Manager, for his approval.

17.2 The Contractor shall be responsible for design of Temporary Works.

17.3 The Project Manager's approval shall not alter the Contractor's responsibility for design of the Temporary Works.

17.4 The Contractor shall obtain approval of third parties to the design of the Temporary Works, where required.

17.5 All Drawings prepared by the Contractor for the execution of the temporary or permanent Works, are subject to prior approval by the Project Manager before this use.

18. Safety

18.1 The Contractor shall be responsible for the safety of all activities on the Site.

19. Discoveries

19.1 Anything of historical or other interest or of significant value unexpectedly discovered on the Site shall be the property of the Procuring Entity. The Contractor shall notify the Project Manager of such discoveries and carry out the Project Manager's instructions for dealing with them.

20. Possession of the Site

20.1 The Procuring Entity shall give possession of all parts of the Site to the Contractor. If possession of a part is not given by the date **stated in the SCC,** the Procuring Entity shall be deemed to have delayed the start of the relevant activities, and this shall be a Compensation Event.

21. Access to the Site

21.1 The Contractor shall allow the Project Manager and any person authorized by the Project Manager access to the Site and to any place where work in connection with the Contract is being carried out or is intended to be carried out.

22. Instructions, Inspections and Audits

22.1 The Contractor shall carry out all instructions of the Project Manager which comply with the applicable laws where the Site is located.

22.2 The Contractor shall keep, and shall make all reasonable efforts to cause its Subcontractors and sub-consultants to keep, accurate and systematic accounts and records in respect of the Works in such form and details as will clearly identify relevant time changes and costs.

22.3 The Contractor shall permit and shall cause its subcontractors and sub-consultants to permit, the Procuring Entity and/or persons appointed by the Public Procurement Regulatory Authority to inspect the Site and/or the accounts and records relating to the procurement process, selection and/or contract execution, and to have such accounts and records audited by auditors appointed by the Public Procurement Regulatory Authority. The Contractor's and its Subcontractors' and sub-consultants' attention is drawn to Sub-Clause 25.1 (Fraud and Corruption) which provides, inter alia, that acts intended to materially impede the exercise of the Public Procurement Regulatory Authority's inspection and audit rights constitute a prohibited practice subject to contract termination (as well as to a determination of ineligibility pursuant to the Public Procurement Regulatory Authority's prevailing sanctions procedures).

23. Appointment of the Adjudicator

23.1 The Adjudicator shall be appointed jointly by the Procuring Entity and the Contractor, at the time of the Procuring Entity's issuance of the Letter of Acceptance. If, in the Letter of Acceptance, the Procuring Entity does not agree on the appointment of the Adjudicator, the Procuring Entity will request the Appointing Authority designated in the SCC, to appoint the Adjudicator within 14 days of receipt of such request.

23.2 Should the Adjudicator resign or die, or should the Procuring Entity and the Contractor agree that the Adjudicator is not functioning in accordance with the provisions of the Contract, a new Adjudicator shall be jointly appointed by the Procuring Entity and the Contractor. In case of disagreement between the Procuring Entity and the Contractor, within 30 days, the Adjudicator shall be designated by the Appointing Authority designated in the SCC at the request of either party, within 14 days of receipt of such request.

24. Settlement of Claims and Disputes

24.1 Contractor's Claims

24.1.1 If the Contractor considers itself to be entitled to any extension of the Time for Completion and/or any additional payment, under any Clause of these Conditions or otherwise in connection with the Contract, the Contractor shall give Notice to the Project Manager, describing the event or circumstance giving rise to the claim. The notice shall be given as soon as practicable, and not later than 30 days after the Contractor became aware, or should have become aware, of the event or circumstance.

24.1.2 If the Contractor fails to give notice of a claim within such period of 30 days, the Time for Completion shall not be extended, the Contractor shall not be entitled to additional payment, and the Procuring Entity shall be discharged from all liability in connection with the claim. Otherwise, the following provisions of this Sub- Clause shall apply.

24.1.3 The Contractor shall also submit any other notices which are required by the Contract, and supporting particulars for the claim, all as relevant to such event or circumstance.

24.1.4 The Contractor shall keep such contemporary records as may be necessary to substantiate any claim, either on the Site or at another location acceptable to the Project Manager. Without admitting the Procuring Entity's liability, the Project Manager may, after receiving any notice under this Sub-Clause, monitor the record- keeping and/or instruct the Contractor to keep further contemporary records. The Contractor shall permit the Project Manager to inspect all these records, and shall (if instructed) submit copies to the Project Manager.

24.1.5 Within 42 days after the Contractor became aware (or should have become aware) of the event or circumstance giving rise to the claim, or within such other period as may be proposed by the Contractor and approved by the Project Manager, the Contractor shall send to the Project Manager a fully detailed claim which includes full supporting particulars of the basis of the claim and of the extension of time and/or additional payment claimed. If the event or circumstance giving rise to the claim has a continuing effect:

a) this fully detailed claim shall be considered as interim;
b) the Contractor shall send further interim claims at monthly intervals, giving the accumulated delay and/or amount claimed, and such further particulars as the Project Manager may reasonably require; and
c) the Contractor shall send a final claim within 30 days after the end of the effects resulting from the event or circumstance, or within such other period as may be proposed by the Contractor and approved by the Project Manager.

24.1.6 Within 42 days after receiving a Notice of a claim or any further particulars supporting a previous claim, or within such other period as may be proposed by the Project Manager and approved by the Contractor, the Project Manager shall respond with approval, or with disapproval and detailed comments. He may also request any necessary further particulars, but shall nevertheless give his response on the principles of the claim within the above defined time period.

24.1.7 Within the above defined period of 42 days, the Project Manager shall proceed in accordance with Sub-Clause

24.1.8 [Determinations] to agree or determine (i) the extension (if any) of the Time for Completion (before or after its expiry) in accordance with Sub-Clause 8.4 [Extension of Time for Completion], and/or (ii) the

additional payment (if any) to which the Contractor is entitled under the Contract.

24.1.9 Each Payment Certificate shall include such additional payment for any claim as has been reasonably substantiated as due under the relevant provision of the Contract. Unless and until the particulars supplied are sufficient to substantiate the whole of the claim, the Contractor shall only be entitled to payment for such part of the claim as he has been able to substantiate.

24.1.10 If the Project Manager does not respond within the timeframe defined in this Clause, either Party may consider that the claim is rejected by the Project Manager and any of the Parties may refer to Arbitration in accordance with Sub-Clause 24.4 [Arbitration].

24.1.11 The requirements of this Sub-Clause are in addition to those of any other Sub-Clause which may apply to a claim. If the Contractor fails to comply with this or another Sub-Clause in relation to any claim, any extension of time and/or additional payment shall take account of the extent (if any) to which the failure has prevented or prejudiced proper investigation of the claim, unless the claim is excluded under the second paragraph of this Sub-Clause 24.3.

242 Amicable Settlement

24.2.1 Where a notice of a claim has been given, both Parties shall attempt to settle the dispute amicably before the commencement of arbitration. However, unless both Parties agree otherwise, the Party giving a notice of a claim in accordance with Sub-Clause 24.1 above should move to commence arbitration after the fifty-sixth day from the day on which a notice of a claim was given, even if no attempt at an amicable settlement has been made.

243 Matters that may be referred to arbitration

24.3.1 Notwithstanding anything stated herein the following matters may be referred to arbitration before the practical completion of the Works or abandonment of the Works or termination of the Contract by either party:

a) The appointment of a replacement Project Manager upon the said person ceasing to act.
b) Whether or not the issue of an instruction by the Project Manager is empowered by these Conditions.
c) Whether or not a certificate has been improperly withheld or is not in accordance with these Conditions.
e) Any dispute arising in respect of war risks or war damage.
f) All other matters shall only be referred to arbitration after the completion or alleged completion of the Works or termination or alleged termination of the Contract, unless the Procuring Entity and the Contractor agree otherwise in writing.

244 Arbitration

24.4.1 Any claim or dispute between the Parties arising out of or in connection with the Contract not settled amicably in accordance with Sub-Clause 24.3 shall be finally settled by arbitration.

24.4.2 No arbitration proceedings shall be commenced on any claim or dispute where notice of a claim or dispute has not been given by the applying party within ninety days of the occurrence or discovery of the matter or issue giving rise to the dispute.

24.4.3 Notwithstanding the issue of a notice as stated above, the arbitration of such a claim or dispute shall not commence unless an attempt has in the first instance been made by the parties to settle such claim or dispute amicably with or without the assistance of third parties. Proof of such attempt shall be required.

24.4.4 The Arbitrator shall, without prejudice to the generality of his powers, have powers to direct such measurements, computations, tests or valuations as may in his opinion be desirable in order to determine the rights of the parties and assess and award any sums which ought to have been the subject of or included in any certificate.

24.4.5 The Arbitrator shall, without prejudice to the generality of his powers, have powers to open up, review and revise any certificate, opinion, decision, requirement or notice and to determine all matters in dispute which shall be submitted to him in the same manner as if no such certificate, opinion, decision requirement or notice had been given.

24.4.6 The arbitrators shall have full power to open up, review and revise any certificate, determination, instruction, opinion or valuation of the Project Manager, relevant to the dispute. Nothing shall disqualify representatives of the Parties and the Project Manager from being called as a witness and giving evidence before the arbitrators on any matter whatsoever relevant to the dispute.

24.4.7 Neither Party shall be limited in the proceedings before the arbitrators to the evidence, or to the reasons for dissatisfaction given in its Notice of Dissatisfaction.

24.4.8 Arbitration may be commenced prior to or after completion of the Works. The obligations of the Parties, and the Project Manager shall not be altered by reason of any arbitration being conducted during the progress of the Works.

24.4.9 The terms of the remuneration of each or all the members of Arbitration shall be mutually agreed upon by the

Parties when agreeing the terms of appointment. Each Party shall be responsible for paying one-half of this remuneration.

24.5 Arbitration with National Contractors

24.5.1 If the Contract is with national contractors, arbitration proceedings will be conducted in accordance with the Arbitration Laws of Kenya. In case of any claim or dispute, such claim or dispute shall be notified in writing by either party to the other with a request to submit it to arbitration and to concur in the appointment of an Arbitrator within thirty days of the notice. The dispute shall be referred to the arbitration and final decision of a person to be agreed between the parties. Failing agreement to concur in the appointment of an Arbitrator, the Arbitrator shall be appointed, on the request of the applying party, by the Chairman or Vice Chairman of any of the following professional institutions;

i) Architectural Association of Kenya
ii) Institute of Quantity Surveyors of Kenya
iii) Association of Consulting Engineers of Kenya
iv) Chartered Institute of Arbitrators (Kenya Branch)
v) Institution of Engineers of Kenya

24.5.2 The institution written to first by the aggrieved party shall take precedence over all other institutions.

24.6 Alternative Arbitration Proceedings

24.6.1 Alternatively, the Parties may refer the matter to the Nairobi Centre for International Arbitration (NCIA) which offers a neutral venue for the conduct of national and international arbitration with commitment to providing institutional support to the arbitral process.

24.7 Failure to Comply with Arbitrator's Decision

24.7.1 The award of such Arbitrator shall be final and binding upon the parties.

24.7.2 In the event that a Party fails to comply with a final and binding Arbitrator's decision, then the other Party may, without prejudice to any other rights it may have, refer the matter to a competent court of law.

24.8 Contract operations to continue

24.8.1 Notwithstanding any reference to arbitration herein,

a) the parties shall continue to perform their respective obligations under the Contract unless they otherwise agree; and
b) the Procuring Entity shall pay the Contractor any monies due the Contractor.

25. Fraud and Corruption

25.1 The Government requires compliance with the country's Anti-Corruption laws and its prevailing sanctions policies and procedures as set forth in the Constitution of Kenya and its Statutes.

25.2 The Procuring Entity requires the Contractor to disclose any commissions or fees that may have been paid or are to be paid to agents or any other party with respect to the bidding process or execution of the Contract. The information disclosed must include at least the name and address of the agent or other party, the amount and currency, and the purpose of the commission, gratuity or fee.

B. Time Control

26. Program

26.1 Within the time stated in the SCC, after the date of the Letter of Acceptance, the Contractor shall submit to the Project Manager for approval a Program showing the general methods, arrangements, order, and timing for all the activities in the Works. In the case of a lump sum contract, the activities in the Program shall be consistent with those in the Activity Schedule.

26.2 An update of the Program shall be a program showing the actual progress achieved on each activity and the effect of the progress achieved on the timing of the remaining work, including any changes to the sequence of the activities.

26.3 The Contractor shall submit to the Project Manager for approval an updated Program at intervals no longer than the period stated in the SCC. If the Contractor does not submit an updated Program within this period, the Project Manager may withhold the amount stated in the SCC from the next payment certificate and

continue to withhold this amount until the next payment after the date on which the overdue Program has been submitted. In the case of a lump sum contract, the Contractor shall provide an updated Activity Schedule within 14 days of being instructed to by the Project Manager.

26.4 The Project Manager's approval of the Program shall not alter the Contractor's obligations. The Contractor may revise the Program and submit it to the Project Manager again at any time. A revised Program shall show the effect of Variations and Compensation Events.

27. Extension of the Intended Completion Date

27.1 The Project Manager shall extend the Intended Completion Date if a Compensation Event occurs or a Variation is issued which makes it impossible for Completion to be achieved by the Intended Completion Date without the Contractor taking steps to accelerate the remaining work, which would cause the Contractor to incur additional cost.

27.2 The Project Manager shall decide whether and by how much to extend the Intended Completion Date within 21 days of the Contractor asking the Project Manager for a decision upon the effect of a Compensation Event or Variation and submitting full supporting information. If the Contractor has failed to give early warning of a delay or has failed to cooperate in dealing with a delay, the delay by this failure shall not be considered in assessing the new Intended Completion Date.

28. Acceleration

28.1 When the Procuring Entity wants the Contractor to finish before the Intended Completion Date, the Project Manager shall obtain priced proposals for achieving the necessary acceleration from the Contractor. If the Procuring Entity accepts these proposals, the Intended Completion Date shall be adjusted accordingly and confirmed by both the Procuring Entity and the Contractor.

28.2 If the Contractor's priced proposals for an acceleration are accepted by the Procuring Entity, they are incorporated in the Contract Price and treated as a Variation.

29. Delays Ordered by the Project Manager

29.1 The Project Manager may instruct the Contractor to delay the start or progress of any activity within the Works.

30. Management Meetings

30.1 Either the Project Manager or the Contractor may require the other to attend a management meeting. The business of a management meeting shall be to review the plans for remaining work and to deal with matters raised in accordance with the early warning procedure.

30.2 The Project Manager shall record the business of management meetings and provide copies of the record to those attending the meeting and to the Procuring Entity. The responsibility of the parties for actions to be taken shall be decided by the Project Manager either at the management meeting or after the management meeting and stated in writing to all who attended the meeting.

31. Early Warning

31.1 The Contractor shall warn the Project Manager at the earliest opportunity of specific likely future events or circumstances that may adversely affect the quality of the work, increase the Contract Price, or delay the execution of the Works. The Project Manager may require the Contractor to provide an estimate of the expected effect of the future event or circumstance on the Contract Price and Completion Date. The estimate shall be provided by the Contractor as soon as reasonably possible.

31.2 The Contractor shall cooperate with the Project Manager in making and considering proposals for how the effect of such an event or circumstance can be avoided or reduced by anyone involved in the work and in carrying out any resulting instruction of the Project Manager.

C. Quality Control

32. Identifying Defects

32.1 The Project Manager shall check the Contractor's work and notify the Contractor of any Defects that are found. Such checking shall not affect the Contractor's responsibilities. The Project Manager may instruct the Contractor to search for a Defect and to uncover and test any work that the Project Manager considers may have a Defect.

33. Tests

33.1 If the Project Manager instructs the Contractor to carry out a test not specified in the Specification to check whether any work has a Defect and the test shows that it does, the Contractor shall pay for the test and any samples. If there is no Defect, the test shall be a Compensation Event.

34. Correction of Defects

34.1 The Project Manager shall give notice to the Contractor of any Defects before the end of the Defects Liability Period, which begins at Completion, and is defined in the SCC. The Defects Liability Period shall be extended for as long as Defects remain to be corrected.

34.2 Every time notice of a Defect is given, the Contractor shall correct the notified Defect within the length of time specified by the Project Manager's notice.

35. Uncorrected Defects

35.1 If the Contractor has not corrected a Defect within the time specified in the Project Manager's notice, the Project Manager shall assess the cost of having the Defect corrected, and the Contractor shall pay this amount.

D. Cost Control

36. Contract Price[7]

36.1 The Bill of Quantities shall contain priced items for the Works to be performed by the Contractor. The Bill of Quantities is used to calculate the Contract Price. The Contractor will be paid for the quantity of the work accomplished at the rate in the Bill of Quantities for each item.

37. Changes in the Contract Price[8]

37.1 If the final quantity of the work done differs from the quantity in the Bill of Quantities for the particular item by more than 25 percent, provided the change exceeds 1 percent of the Initial Contract Price, the Project Manager shall adjust the rate to allow for the change. The Project Manager shall not adjust rates from changes in quantities if thereby the Initial Contract Price is exceeded by more than 15 percent, except with the prior approval of the Procuring Entity.

37.2 If requested by the Project Manager, the Contractor shall provide the Project Manager with a detailed cost breakdown of any rate in the Bill of Quantities.

38. Variations

38.1 All Variations shall be included in updated Programs[9] produced by the Contractor.

38.2 The Contractor shall provide the Project Manager with a quotation for carrying out the Variation when requested to do so by the Project Manager. The Project Manager shall assess the quotation, which shall be given within seven (7) days of the request or within any longer period stated by the Project Manager and before the Variation is ordered.

38.3 If the Contractor's quotation is unreasonable, the Project Manager may order the Variation and make a change to the Contract Price, which shall be based on the Project Manager's own forecast of the effects of the Variation on the Contractor's costs.

38.4 If the Project Manager decides that the urgency of varying the work would prevent a quotation being given and considered without delaying the work, no quotation shall be given and the Variation shall be treated as a Compensation Event.

---

[7] *In lump sum contracts, replace GCC Sub-Clauses 36.1 as follows:*

36.1 The Contractor shall provide updated Activity Schedules within 14 days of being instructed to by the Project Manager. The Activity Schedule shall contain the priced activities for the Works to be performed by the Contractor. The Activity Schedule is used to monitor and control the performance of activities on which basis the Contractor will be paid. If payment for materials on site shall be made separately, the Contractor shall show delivery of Materials to the Site separately on the Activity Schedule.

[8] *In lump sum contracts, replace entire GCC Clause 37 with new GCC Sub-Clause 37.1, as follows:*
The Activity Schedule shall be amended by the Contractor to accommodate changes of Program or method of working made at the Contractor's own discretion. Prices in the Activity Schedule shall not be altered when the Contractor makes such changes to the Activity Schedule.

[9] *In lump sum contracts, add "and Activity Schedules" after "Programs."* [10] *In lump sum contracts, delete this paragraph.*

38.5 The Contractor shall not be entitled to additional payment for costs that could have been avoided by giving early warning

38.6 If the work in the Variation corresponds to an item description in the Bill of Quantities and if, in the opinion of the Project Manager, the quantity of work above the limit stated in Sub-Clause 39.1 or the timing of its execution do not cause the cost per unit of quantity to change, the rate in the Bill of Quantities shall be used to calculate the value of the Variation. If the cost per unit of quantity changes, or if the nature or timing of the work in the Variation does not correspond with items in the Bill of Quantities, the quotation by the Contractor shall be in the form of new rates for the relevant items of work

38.7 Value Engineering: The Contractor may prepare, at its own cost, a value engineering proposal at any time during the performance of the contract. The value engineering proposal shall, at a minimum, include the following;

a) the proposed change(s), and a description of the difference to the existing contract requirements;
b) a full cost/benefit analysis of the proposed change(s) including a description and estimate of costs (including life cycle costs) the Procuring Entity may incur in implementing the value engineering proposal; and
c) a description of any effect(s) of the change on performance/functionality.

38.8 The Procuring Entity may accept the value engineering proposal if the proposal demonstrates benefits that:

a) accelerate the contract completion period; or
b) reduce the Contract Price or the life cycle costs to the Procuring Entity; or
c) improve the quality, efficiency, safety or sustainability of the Facilities; or
d) yield any other benefits to the Procuring Entity, without compromising the functionality of the Works.

38.9 If the value engineering proposal is approved by the Procuring Entity and results in:

a) a reduction of the Contract Price; the amount to be paid to the Contractor shall be the **percentage specified in the SCC** of the reduction in the Contract Price; or
b) an increase in the Contract Price; but results in a reduction in life cycle costs due to any benefit described in (a) to (d) above, the amount to be paid to the Contractor shall be the full increase in the Contract Price.

39. Cash FlowForecasts

39.1 When the Program[11], is updated, the Contractor shall provide the Project Manager with an updated cash flow forecast. The cash flow forecast shall include different currencies, as defined in the Contract, converted as necessary using the Contract exchange rates.

40. Payment Certificates

40.1 The Contractor shall submit to the Project Manager monthly statements of the estimated value of the work executed less the cumulative amount certified previously.

40.2 The Project Manager shall check the Contractor's monthly statement and certify the amount to be paid to the Contractor.

40.3 The value of work executed shall be determined by the Project Manager.

40.4 The value of work executed shall comprise the value of the quantities of work in the Bill of Quantities that have been completed12.

40.5 The value of work executed shall include the valuation of Variations and Compensation Events.

40.6 The Project Manager may exclude any item certified in a previous certificate or reduce the proportion of any item previously certified in any certificate in the light of later information.

40.7 Where the contract price is different from the corrected tender price, in order to ensure the contractor is not paid less or more relative to the contract price (which would be the tender price), payment valuation certificates and variation orders on omissions and additions valued based on rates in the Bill of Quantities or schedule of rates in the Tender, will be adjusted by a plus or minus percentage. The percentage already worked out during tender evaluation is worked out as follows: *(corrected tender price – tender price)/tender price X 100*.

41. Payments

41.1 Payments shall be adjusted for deductions for advance payments and retention. The Procuring Entity shall pay the Contractor the amounts certified by the Project Manager within 30 days of the date of each certificate. If the Procuring Entity makes a late payment, the Contractor shall be paid interest on the late payment in the next payment. Interest shall be calculated from the date by which the payment should have been made up to the date when the late payment is made at the prevailing rate of interest for commercial borrowing for each of the currencies in which payments are made.

41.2 If an amount certified is increased in a later certificate or as a result of an award by the Adjudicator or an Arbitrator, the Contractor shall be paid interest upon the delayed payment as set out in this clause. Interest shall be calculated from the date upon which the increased amount would have been certified in the absence of dispute.

41.3 Unless otherwise stated, all payments and deductions shall be paid or charged in the proportions of currencies comprising the Contract Price.

41.4 Items of the Works for which no rate or price has been entered in shall not be paid for by the Procuring Entity and shall be deemed covered by other rates and prices in the Contract.

42. Compensation Events

42.1 The following shall be Compensation Events:

d) The Procuring Entity does not give access to a part of the Site by the Site Possession Date pursuant to GCC Sub-Clause 20.1.

e) The Procuring Entity modifies the Schedule of Other Contractors in a way that affects the work of the Contractor under the Contract.

f) The Project Manager orders a delay or does not issue Drawings, Specifications, or instructions required for execution of the Works on time.

g) The Project Manager instructs the Contractor to uncover or to carry out additional tests upon work, which is then found to have no Defects.

h) The Project Manager unreasonably does not approve a subcontract to be let.

i) Ground conditions are substantially more adverse than could reasonably have been assumed before issuance of the Letter of Acceptance from the information issued to bidders (including the Site Investigation Reports), from information available publicly and from a visual inspection of the Site.

j) The Project Manager gives an instruction for dealing with an unforeseen condition, caused by the Procuring Entity, or additional work required for safety or other reasons.

k) Other contractors, public authorities, utilities, or the Procuring Entity does not work within the dates and other constraints stated in the Contract, and they cause delay or extra cost to the Contractor.

l) The advance payment is delayed.

m) The effects on the Contractor of any of the Procuring Entity's Risks.

n) The Project Manager unreasonably delays issuing a Certificate of Completion.

42.2 If a Compensation Event would cause additional cost or would prevent the work being completed before the Intended Completion Date, the Contract Price shall be increased and/or the Intended Completion Date shall be extended. The Project Manager shall decide whether and by how much the Contract Price shall be increased and whether and by how much the Intended Completion Date shall be extended.

42.3 As soon as information demonstrating the effect of each Compensation Event upon the Contractor's forecast cost has been provided by the Contractor, it shall be assessed by the Project Manager, and the Contract Price shall be adjusted accordingly. If the Contractor's forecast is deemed unreasonable, the Project Manager shall adjust the Contract Price based on the Project Manager's own forecast. The Project Manager shall assume that the Contractor shall react competently and promptly to the event.

---

[11] *In lump sum contracts, add "or Activity Schedule" after "Program."*

[12] *In lump sum contracts, replace this paragraph with the following: "The value of work executed shall comprise the value of completed activities in the Activity Schedule."*

42.4 The Contractor shall not be entitled to compensation to the extent that the Procuring Entity's interests are adversely affected by the Contractor's not having given early warning or not having cooperated with the Project Manager.

43. Tax

43.1 The Project Manager shall adjust the Contract Price if taxes, duties, and other levies are changed between the date 30 days before the submission of bids for the Contract and the date of the last Completion certificate. The adjustment shall be the change in the amount of tax payable by the Contractor, provided such changes are not already reflected in the Contract Price or are a result of GCC Clause 44.

44. Currency y of Payment

44.1 All payments under the contract shall be made in Kenya Shillings

45. Price Adjustment

45.1 Prices shall be adjusted for fluctuations in the cost of inputs only if **provided for in the SCC.** If so provided, the amounts certified in each payment certificate, before deducting for Advance Payment, shall be adjusted by applying the respective price adjustment factor to the payment amounts due in each currency. A separate formula of the type specified below applies:

P = A + B Im/Io

where: P is the adjustment factor for the portion of the Contract Price payable.

A and B are coefficients[13] **specified in the SCC,** representing the non-adjustable and adjustable portions, respectively, of the Contract Price payable and Im is the index prevailing at the end of the month being invoiced and IOC is the index prevailing 30 days before Bid opening for inputs payable.

45.2 If the value of the index is changed after it has been used in a calculation, the calculation shall be corrected and an adjustment made in the next payment certificate. The index value shall be deemed to take account of all changes in cost due to fluctuations in costs.

46. Retention

46.1 The Procuring Entity shall retain from each payment due to the Contractor the proportion stated in the **SCC** until Completion of the whole of the Works.

46.2 Upon the issue of a Certificate of Completion of the Works by the Project Manager, in accordance with GCC 53.1, half the total amount retained shall be repaid to the Contractor and half when the Defects Liability Period has passed and the Project Manager has certified that all Defects notified by the Project Manager to the Contractor before the end of this period have been corrected. The Contractor may substitute retention money with an "on demand" Bank guarantee.

47. Liquidated Damages

47.1 The Contractor shall pay liquidated damages to the Procuring Entity at the rate per day stated in the **SCC** for each day that the Completion Date is later than the Intended Completion Date. The total amount of liquidated damages shall not exceed the amount defined in the SCC. The Procuring Entity may deduct liquidated damages from payments due to the Contractor. Payment of liquidated damages shall not affect the Contractor's liabilities.

47.2 If the Intended Completion Date is extended after liquidated damages have been paid, the Project Manager shall correct any overpayment of liquidated damages by the Contractor by adjusting the next payment certificate. The Contractor shall be paid interest on the overpayment, calculated from the date of payment to the date of repayment, at the rates specified in GCC Sub-Clause 41.1.

48. Bonus

48.1 The Contractor shall be paid a Bonus calculated at the rate per calendar day **stated in the SCC** for each day (less any days for which the Contractor is paid for acceleration) that the Completion is earlier than the Intended Completion Date. The Project Manager shall certify that the Works are complete, although they may not be due to be complete.

49. Advance Payment

49.1 The Procuring Entity shall make advance payment to the Contractor of the amounts stated in the **SCC** by the date stated in the **SCC**, against provision by the Contractor of an Unconditional Bank Guarantee in a form and by a bank acceptable to the Procuring Entity in amounts and currencies equal to the advance payment. The Guarantee shall remain effective until the advance payment has been repaid, but the amount of the Guarantee shall be progressively reduced by the amounts repaid by the Contractor. Interest shall not be charged on the advance payment.

49.2 The Contractor is to use the advance payment only to pay for Equipment, Plant, Materials, and mobilization expenses required specifically for execution of the Contract. The Contractor shall demonstrate that advance payment has been used in this way by supplying copies of invoices or other documents to the Project Manager.

49.3 The advance payment shall be repaid by deducting proportionate amounts from payments otherwise due to the Contractor, following the schedule of completed percentages of the Works on a payment basis. No account shall be taken of the advance payment or its repayment in assessing valuations of work done, Variations, price adjustments, Compensation Events, Bonuses, or Liquidated Damages.

50. Securities

50.1 The Performance Security shall be provided to the Procuring Entity no later than the date specified in the Letter of Acceptance and shall be issued in an amount **specified in the SCC,** by a bank or surety acceptable to the Procuring Entity, and denominated in the types and proportions of the currencies in which the Contract Price is payable. The Performance Security shall be valid until a date 28 day from the date of issue of the Certificate of Completion in the case of a Bank Guarantee, and until one year from the date of issue of the Completion Certificate in the case of a Performance Bond.

51. Dayworks

51.1 If applicable, the Dayworks rates in the Contractor's Bid shall be used only when the Project Manager has given written instructions in advance for additional work to be paid for in that way.

51.2 All work to be paid for as Dayworks shall be recorded by the Contractor on forms approved by the Project Manager. Each completed form shall be verified and signed by the Project Manager within two days of the work being done.

51.3 The Contractor shall be paid for Dayworks subject to obtaining signed Dayworks forms.

52. Cost of Repairs

52.1 Loss or damage to the Works or Materials to be incorporated in the Works between the Start Date and the end of the Defects Correction periods shall be remedied by the Contractor at the Contractor's cost if the loss or damage arises from the Contractor's acts or omissions.

E. Finishing the Contract

53. Completion

53.1 The Contractor shall request the Project Manager to issue a Certificate of Completion of the Works, and the Project Manager shall do so upon deciding that the whole of the Works is completed.

54. Taking Over

54.1 The Procuring Entity shall take over the Site and the Works within seven days of the Project Manager's issuing a certificate of Completion.

55. Final Account

55.1 The Contractor shall supply the Project Manager with a detailed account of the total amount that the Contractor considers payable under the Contract before the end of the Defects Liability Period. The Project Manager shall issue a Defects Liability Certificate and certify any final payment that is due to the Contractor within 56 days of receiving the Contractor's account if it is correct and complete. If it is not, the Project Manager shall issue within 56 days a schedule that states the scope of the corrections or additions that are necessary. If the Final Account is still unsatisfactory after it has been resubmitted, the Project Manager shall decide on the amount payable to the Contractor and issue a payment certificate.

---

[13] *The sum of the two coefficients A and B should be 1 (one) in the formula for each currency. Normally, both coefficients shall be the same in the formulae for all currencies, since coefficient A, for the non-adjustable portion of the payments, is a very approximate figure (usually 0.15) to take account of fixed cost elements or other non-adjustable components. The sum of the adjustments for each currency are added to the Contract Price.*

56. Operating and Maintenance Manuals

56.1 If "as built" Drawings and/or operating and maintenance manuals are required, the Contractor shall supply them by the dates stated in the SCC.

56.2 If the Contractor does not supply the Drawings and/or manuals by the dates stated in the SCC pursuant to GCC Sub-Clause 56.1, or they do not receive the Project Manager's approval, the Project Manager shall withhold the amount **stated in the SCC** from payments due to the Contractor.

57. Termination

57.1 The Procuring Entity or the Contractor may terminate the Contract if the other party causes a fundamental breach of the Contract.

57.2 Fundamental breaches of Contract shall include, but shall not be limited to, the following:

a) the Contractor stops work for 30 days when no stoppage of work is shown on the current Program and the stoppage has not been authorized by the Project Manager;

b) the Project Manager instructs the Contractor to delay the progress of the Works, and the instruction is not withdrawn within 30 days;

c) the Procuring Entity or the Contractor is made bankrupt or goes into liquidation other than for a reconstruction or amalgamation;

d) a payment certified by the Project Manager is not paid by the Procuring Entity to the Contractor within 84 days of the date of the Project Manager's certificate;

e) the Project Manager gives Notice that failure to correct a particular Defect is a fundamental breach of Contract and the Contractor fails to correct it within a reasonable period of time determined by the Project Manager;

f) the Contractor does not maintain a Security, which is required;

g) the Contractor has delayed the completion of the Works by the number of days for which the maximum amount of liquidated damages can be paid, as **defined in the SCC**; or

h) if the Contractor, in the judgment of the Procuring Entity has engaged in Fraud and Corruption, as defined in paragraph 2.2 a of the Appendix A to the GCC, in competing for or in executing the Contract, then the Procuring Entity may, after giving fourteen (14) days written notice to the Contractor, terminate the Contract and expel him from the Site.

57.3 Notwithstanding the above, the Procuring Entity may terminate the Contract for convenience.

57.4 If the Contract is terminated, the Contractor shall stop work immediately, make the Site safe and secure, and leave the Site as soon as reasonably possible.

57.5 When either party to the Contract gives notice of a breach of Contract to the Project Manager for a cause other than those listed under GCC Sub-Clause 56.2 above, the Project Manager shall decide whether the breach is fundamental or not.

58. Payment upon Termination

58.1 If the Contract is terminated because of a fundamental breach of Contract by the Contractor, the Project Manager shall issue a certificate for the value of the work done and Materials ordered less advance payments received up to the date of the issue of the certificate and less the percentage to apply to the value of the work not completed, as specified in the SCC. Additional Liquidated Damages shall not apply. If the total amount due to the Procuring Entity exceeds any payment due to the Contractor, the difference shall be a debt payable to the Procuring Entity.

58.2 If the Contract is terminated for the Procuring Entity's convenience or because of a fundamental breach of Contract by the Procuring Entity, the Project Manager shall issue a certificate for the value of the work done, Materials ordered, the reasonable cost of removal of Equipment, repatriation of the Contractor's personnel employed solely on the Works, and the Contractor's costs of protecting and securing the Works, and less advance payments received up to the date of the certificate.

59. Property

59.1 All Materials on the Site, Plant, Equipment, Temporary Works, and Works shall be deemed to be the property of the Procuring Entity if the Contract is terminated because of the Contractor's default.

60. Release from Performance

60.1 If the Contract is frustrated by the outbreak of war or by any other event entirely outside the control of either the Procuring Entity or the Contractor, the Project Manager shall certify that the Contract has been frustrated. The Contractor shall make the Site safe and stop work as quickly as possible after receiving this certificate and shall be paid for all work carried out before receiving it and for any work carried out afterwards to which a commitment wasmade.

SECTION IX - SPECIAL CONDITIONS OF CONTRACT

Except where otherwise specified, all Special *Conditions of Contract should be filled in by the Procuring Entity prior to issuance of the bidding document. Schedules and reports to be provided by the Procuring Entity should be annexed.*

Number of GC Clause	Amendments of, and Supplements to, Clauses in the General Conditions of Contract
	A. General
GCC 1.1 (q)	The Procuring Entity is *[KeRRA-Region Director KITUI Region]*.
GCC 1.1 (u)	The Intended Completion Date for the whole of the Works shall be *[3 months after commencement date]*
GCC 1.1 (x)	The Project Manager is *[Regional Director –KITUI Region]*.
GCC 1.1 (z)	The Site is located at *[insert address of Site]* and is defined in drawings
GCC 1.1 (cc)	The Start Date shall be *[As Prescribed In The Commencement Letter]*.
GCC 1.1 (gg)	The Works consist of *[As Prescribed Under BOQ]*.
GCC 2.2	Sectional Completions are: *[N/A]*
GCC 5.1	The Project manager may delegate any of his duties and responsibilities.
GCC 8.1	Schedule of other contractors: *[N/A]*
GCC 9.1	**Key Personnel** GCC 9.1 is replaced with the following: 9.1 Key Personnel are the Contractor's personnel named in this GCC 9.1 of the Special Conditions of Contract. The Contractor shall employ the Key Personnel and use the equipment identified in its Bid, to carry out the Works or other personnel and equipment approved by the Project Manager. The Project Manager shall approve any proposed replacement of Key Personnel and equipment only if their relevant qualifications or characteristics are substantially equal to or better than those proposed in the Bid. [insert the name/s of each Key Personnel agreed by the Procuring Entity prior to Contract signature.]
GCC 13.1	The minimum insurance amounts and deductibles shall be: (a) for loss or damage to the Works, Plant and Materials: *[contract value]*. (b) For loss or damage to Equipment: *[Value Of Equipment On Site]*. (c) for loss or damage to property (except the Works, Plant, Materials, and Equipment) in connection with Contract *[provide insurance cover]*. (d) for personal injury or death: (i) of the Contractor's employees: *[not less than khs, 2,000,000.00]*. (ii) of other people: *[not less than khs, 2,000,000.00]*.
GCC 14.1	Site Data are: *[N/A]*
GCC 20.1	The Site Possession Date(s) shall be: *[as indicated in the letter of possession of site]*
GCC 23.1 & GCC 23.2	Appointing Authority for the Adjudicator: [*CIARB]*.
	Hourly rate and types of reimbursable expenses to be paid to the Adjudicator: (as determined by

Number of GC Clause	Amendments of, and Supplements to, Clauses in the General Conditions of Contract
	the *CIARB]*.
B. Time Control	
GCC 26.1	The Contractor shall submit for approval a Program for the Works within *21 days after issuance of the order to commence*.
GCC 26.3	The period between Program updates is *[14 days after instructions from the Engineer]* days. The amount to be withheld for late submission of an updated Program is *[N/A]*.
C. Quality Control	
GCC 34.1	The Defects Liability Period is: *[N/A]* days.
D. Cost Control	
GCC 38.9	If the value engineering proposal is approved by the Procuring Entity the amount to be paid to the Contractor shall be _N/A__% *(insert appropriate percentage. The percentage is normally up to 50%)* of the reduction in the Contract Price.
GCC 44.1	The currency of the Procuring Entity's Country is: *[Kenya shillings]*.
GCC 45.1	The Contract *["is not"]* subject to price adjustment in accordance with GCC Clause 45, and the following information regarding coefficients *[specify "does" or "does not"]* apply. The coefficients for adjustment of prices are: (a) *[insert percentage]* percent nonadjustable element (coefficient A). (ib) *[insert percentage]* percent adjustable element (coefficient B). (c) The Index I for shall be *[insert index]*.
GCC 46.1	The proportion of payments retained is: *[10% of the interim certificate up to a maximum of 5% of the contract sum] N/A*
GCC 47.1	The liquidated damages for the whole of the Works are *[0.05%]* per day of the contract price. The maximum amount of liquidated damages for the whole of the Works is *[5%]* of the final Contract Price.
GCC 48.1	The Bonus for the whole of the Works is *[N/A]* per day. The maximum amount of Bonus for the whole of the Works is *[N/A]* of the final Contract Price. *N/A*
GCC 49.1	The Advance Payments shall be: *[insert amount(s)]* and shall be paid to the Contractor no later than *[N/A]*.
GCC 50.1	The Performance Security amount is *[insert amount(s) denominated in the types and proportions of the currencies in which the Contract Price is payable, or in a freely convertible currency acceptable to the* Procuring Entity*]* (a) Performance Security – Bank Guarantee: in the amount(s) of *[5%]* percent of the Accepted Contract Amount and in the same currency of the Accepted Contract Amount above KSH. 5 MILLION and shall be valid for 90 Days from the date of order to commence works
E. Finishing the Contract	
GCC 56.1	The date by which operating and maintenance manuals are required is *[N/A]*. The date by which "as built" drawings are required is *[in N/A]*.

Number of GC Clause	Amendments of, and Supplements to, Clauses in the General Conditions of Contract
GCC 56.2	The amount to be withheld for failing to produce "as built" drawings and/or operating and maintenance manuals by the date required in GCC 58.1 is *[N/A]*.
GCC 57.2 (g)	The maximum number of days is: *[N/A]*.
GCC 58.1	The percentage to apply to the value of the work not completed, representing the Procuring Entity's additional cost for completing the Works, is *[N/A]*.

FORM No 1: NOTIFICATION OF INTENTION TO AWARD

This Notification of Intention to Award shall be sent to each Tenderer that submitted a Tender. Send this Notification to the Tenderer's Authorized Representative named in the Tender Information Form on the format below.

FORMAT

1. For the attention of Tenderer's Authorized Representative
   - *i)* Name: *[insert Authorized Representative's name]*
   - *ii)* Address: *[insert Authorized Representative's Address]*
   - *iii)* Telephone: *[insert Authorized Representative's telephone/fax numbers]*
   - *iv)* Email Address: *[insert Authorized Representative's email address]*

   [IMPORTANT: insert the date that this Notification is transmitted to Tenderers. The Notification must be sent to all Tenderers simultaneously. This means on the same date and as close to the same time as possible.]

2. Date of transmission: [*email*] on [*date*] (local time)

   This Notification is sent by (*Name and designation*) _____

3. Notification of Intention to Award

   - *i)* Procuring Entity: *[insert the name of the Procuring Entity]*
   - *ii)* Project: *[insert name of project]*
   - *iii)* Contract title: *[insert the name of the contract]*
   - *iv)* Country: *[insert country where ITT is issued]*
   - *v)* ITT No: *[insert ITT reference number from Procurement Plan]*

   This Notification of Intention to Award (Notification) notifies you of our decision to award the above contract. The transmission of this Notification begins the Standstill Period. During the Standstill Period, you may:

4. Request a debriefing in relation to the evaluation of your tender

   Submit a Procurement-related Complaint in relation to the decision to award the contract.

   a) The successful tenderer

      i) Name of successful Tender _____

      ii) Address of the successful Tender _____

      iii) Contract price of the successful Tender Kenya Shillings _____ (in words _____)

   b) Other Tenderers

   Names of all Tenderers that submitted a Tender. If the Tender's price was evaluated include the evaluated price as well as the Tender price as read out. For Tenders not evaluated, give one main reason the Tender was unsuccessful.

SNo	Name of Tender	Tender Price as read out	Tender's evaluated price (Note a)	One Reason Why not Evaluated
1				
2				
3				
4				
5				

(Note a) State NE if not evaluated

5. How to request a debriefing

a) DEADLINE: The deadline to request a debriefing expires at midnight on [*insert date*] (*local time*).

b) You may request a debriefing in relation to the results of the evaluation of your Tender. If you decide to request a debriefing your written request must be made within three (5) Business Days of receipt of this Notification of Intention to Award.

c) Provide the contract name, reference number, name of the Tenderer, contact details; and address the request for debriefing as follows:

i) Attention: [*insert full name of person, if applicable*]

ii) Title/position: [*insert title/position*]

ii) Agency: [*insert name of Procuring Entity*]

iii) Email address: [*insert email address*]

d) If your request for a debriefing is received within the 3 Days deadline, we will provide the debriefing within five (3) Business Days of receipt of your request. If we are unable to provide the debriefing within this period, the Standstill Period shall be extended by five (3) Days after the date that the debriefing is provided. If this happens, we will notify you and confirm the date that the extended Standstill Period will end.

e) The debriefing may be in writing, by phone, video conference call or in person. We shall promptly advise you in writing how the debriefing will take place and confirm the date and time.

f) If the deadline to request a debriefing has expired, you may still request a debriefing. In this case, we will provide the debriefing as soon as practicable, and normally no later than fifteen (15) Days from the date of publication of the Contract Award Notice.

6. How to make a complaint

a) Period: Procurement-related Complaint challenging the decision to award shall be submitted by midnight, [*insert date*] (local time).

b) Provide the contract name, reference number, name of the Tenderer, contact details; and address the Procurement-related Complaint as follows:

i) Attention: [*insert full name of person, if applicable*]

ii) Title/position: [*insert title/position*]

iii) Agency: [*insert name of Procuring Entity*]

iv) Email address: [*insert email address*]

c) At this point in the procurement process, you may submit a Procurement-related Complaint challenging the decision to award the contract. You do not need to have requested, or received, a debriefing before making this complaint. Your complaint must be submitted within the Standstill Period and received by us before the Standstill Period ends.

d) Further information: For more information refer to the Public Procurement and Disposals Act 2015 and its Regulations available from the Website info@ppra.go.ke or complaints@ppra.go.ke.

You should read these documents before preparing and submitting your complaint.

e) There are four essential requirements:

i) You must be an 'interested party'. In this case, that means a Tenderer who submitted a Tender in this tendering process, and is the recipient of a Notification of Intention to Award.

ii) The complaint can only challenge the decision to award the contract.

iii) You must submit the complaint within the period stated above.

iv) You must include, in your complaint, all of the information required to support your complaint.

7. Standstill Period

i) DEADLINE: The Standstill Period is due to end at midnight on [*insert date*] (local time).

ii) The Standstill Period lasts ten (14) Days after the date of transmission of this Notification of Intention to Award.

iii) The Standstill Period may be extended as stated in paragraph Section 5 (d) above.

If you have any questions regarding this Notification please do not hesitate to contact us. On behalf of the Procuring Entity:

Signature:_____ **Name:**_____

Title/position:_____ **Telephone:**___ **Email:** _____

FORM NO. 2 - REQUEST FOR REVIEW

FORM FOR REVIEW(r.203(1))

PUBLIC PROCUREMENT ADMINISTRATIVE REVIEW BOARD

APPLICATION NO…….OF…….…..20……...

BETWEEN

……...…….APPLICANT

AND

……RESPONDENT (Procuring Entity)

Request for review of the decision of the…… (Name of the Procuring Entity of ……dated the…day of …….20…….in the matter of Tender No……..…of ……..20….. for .....(Tender description).

REQUEST FOR REVIEW

I/We……,the above named Applicant(s), of address: Physical address…….P. O. Box No……. Tel. No……..Email ……, hereby request the Public Procurement Administrative Review Board to review the whole/part of the above mentioned decision on the following grounds , namely:

1.

2.

By this memorandum, the Applicant requests the Board for an order/orders that:

1.

2.

SIGNED …….(Applicant) Dated on…….day of ……/…20……

FOR OFFICIAL USE ONLY Lodged with the Secretary Public Procurement Administrative Review Board on……day of ……....20….……

SIGNED

Board Secretary

FORM NO 3: LETTER OF AWARD

[letterhead paper of the Procuring Entity] [date]

To: *[name and address of the Contractor]*

This is to notify you that your Tender dated *[date]* for execution of the *[name of the Contract and identification number, as given in the Contract Data]* for the Accepted Contract Amount *[amount in numbers and words] [name of currency]*, as corrected and modified in accordance with the Instructions to Tenderers, is hereby accepted by …… (*name of Procuring Entity)*.

You are requested to furnish the Performance Security within 30 days in accordance with the Conditions of Contract, using, for that purpose, one of the Performance Security Forms included in Section VIII, Contract Forms, of the Tender Document.

Authorized Signature:.....

Name and Title of Signatory:.....

Name of Procuring Entity.....

Attachment: *Contract Agreement*.....

FORM NO 4: CONTRACT AGREEMENT

THIS AGREEMENT made the_____day of_____, 20____, between _____of _____ (hereinafter "the Procuring Entity"), of the one part, and_____of_____(hereinafter "the Contractor"), of the other part:

WHEREAS the Procuring Entity desires that the Works known as_____should be executed by the Contractor, and has accepted a Tender by the Contractor for the execution and completion of these Works and the remedying of any defects therein,

The Procuring Entity and the Contractor agree as follows:

1. In this Agreement words and expressions shall have the same meanings as are respectively assigned to them in the Contract documents referred to.

2. The following documents shall be deemed to form and be read and construed as part of this Agreement. This Agreement shall prevail over all other Contract documents.
   a) the Letter of Acceptance
   b) the Letter of Tender
   c) the addenda Nos_____(if any)
   d) the Special Conditions of Contract
   e) the General Conditions of Contract;
   f) the Specifications
   g) the Drawings; and
   h) the completed Schedules and any other documents forming part of the contract.

3. In consideration of the payments to be made by the Procuring Entity to the Contractor as specified in this Agreement, the Contractor hereby covenants with the Procuring Entity to execute the Works and to remedy defects therein in conformity in all respects with the provisions of the Contract.

4. The Procuring Entity hereby covenants to pay the Contractor in consideration of the execution and completion of the Works and the remedying of defects therein, the Contract Price or such other sum as may become payable under the provisions of the Contract at the times and in the manner prescribed by the Contract.

IN WITNESS whereof the parties hereto have caused this Agreement to be executed in accordance with the Laws of Kenya on the day, month and year specified above.

Signed and sealed by_____(for the Procuring Entity)

Signed and sealed by_____(for the Contractor).

FORM NO. 5 - PERFORMANCE SECURITY

[Option 1 - Unconditional Demand Bank Guarantee]

[Guarantor letterhead]

Beneficiary: _____ *[insert name and Address of* Procuring Entity*]* **Date:** _____

_____ *[Insert date of issue]*

Guarantor: [*Insert name and address of place of issue, unless indicated in the letterhead]*

1. We have been informed that _____ (hereinafter called "the Contractor") has entered into Contract No. _____ dated _____ with (*name of Procuring Entity*) _____ (the Procuring Entity as the Beneficiary), for the execution of _____ (hereinafter called "the Contract").

2. Furthermore, we understand that, according to the conditions of the Contract, a performance guarantee is required.

3. At the request of the Contractor, we as Guarantor, hereby irrevocably undertake to pay the Beneficiary any sum or sums not exceeding in total an amount of _____ (*in words*),[1] such sum being payable in the types and proportions of currencies in which the Contract Price is payable, upon receipt by us of the Beneficiary's complying demand supported by the Beneficiary's statement, whether in the demand itself or in a separate signed document accompanying or identifying the demand, stating that the Applicant is in breach of its obligation(s) under the Contract, without the Beneficiary needing to prove or to show grounds for your demand or the sum specified therein.

4. This guarantee shall expire, no later than the …. Day of ……, 2...…[2], and any demand for payment under it must be received by us at the office indicated above on or before that date.

5. The Guarantor agrees to a one-time extension of this guarantee for a period not to exceed *[six months] [one year]*, in response to the Beneficiary's written request for such extension, such request to be presented to the Guarantor before the expiry of the guarantee."

[Name of Authorized Official, signature(s) and seals/stamps].

Note: *All italicized text (including footnotes) is for use in preparing this form and shall be deleted from the final product.*

[1] *The Guarantor shall insert an amount representing the percentage of the Accepted Contract Amount specified in the Letter of Acceptance, less provisional sums, if any, and denominated either in the currency of the Contract or a freely convertible currency acceptable to the Beneficiary.*

[2] *Insert the date twenty-eight days after the expected completion date as described in GC Clause 11.9. The Procuring Entity should note that in the event of an extension of this date for completion of the Contract, the Procuring Entity would need to request an extension of this guarantee from the Guarantor. Such request must be in writing and must be made prior to the expiration date established in the guarantee.*

FORM No. 6 - PERFORMANCE SECURITY

[Option 2– Performance Bond]

[Note: Procuring Entities are advised to use Performance Security – Unconditional Demand Bank Guarantee instead of Performance Bond due to difficulties involved in calling Bond holder to action]

[Guarantor letterhead or SWIFT identifier code]

Beneficiary: _____ *[insert name and Address of* Procuring Entity*]* **Date:** _____ *[Insert date of issue]*.

PERFORMANCE BONDNo.: _____

Guarantor: [*Insert name and address of place of issue, unless indicated in the letterhead]*

1. By this Bond _____ as Principal (hereinafter called "the Contractor") and _____] as Surety (hereinafter called "the Surety"), are held and firmly bound unto _____] as Obligee (hereinafter called "the Procuring Entity") in the amount of _____ for the payment of which sum well and truly to be made in the types and proportions of currencies in which the Contract Price is payable, the Contractor and the Surety bind themselves, their heirs, executors, administrators, successors and assigns, jointly and severally, firmly by these presents.

2. WHEREAS the Contractor has entered into a written Agreement with the Procuring Entity dated the _____ day of _____, 20 , for _____ in accordance with the documents, plans, specifications, and amendments thereto, which to the extent herein provided for, are by reference made part hereof and are hereinafter referred to as the Contract.

3. NOW, THEREFORE, the Condition of this Obligation is such that, if the Contractor shall promptly and faithfully perform the said Contract (including any amendments thereto), then this obligation shall be null and void; otherwise, it shall remain in full force and effect. Whenever the Contractor shall be, and declared by the Procuring Entity to be, in default under the Contract, the Procuring Entity having performed the Procuring Entity's obligations thereunder, the Surety may promptly remedy the default, or shall promptly:
   1) complete the Contract in accordance with its terms and conditions; or
   2) obtain a tender or tenders from qualified tenderers for submission to the Procuring Entity for completing the Contract in accordance with its terms and conditions, and upon determination by the Procuring Entity and the Surety of the lowest responsive Tenderers, arrange for a Contract between such Tenderer, and Procuring Entity and make available as work progresses (even though there should be a default or a succession of defaults under the Contract or Contracts of completion arranged under this paragraph) sufficient funds to pay the cost of completion less the Balance of the Contract Price; but not exceeding, including other costs and damages for which the Surety may be liable hereunder, the amount set forth in the first paragraph hereof. The term "Balance of the Contract Price," as used in this paragraph, shall mean the total amount payable by Procuring Entity to Contractor under the Contract, less the amount properly paid by Procuring Entity to Contractor; or
   3) pay the Procuring Entity the amount required by Procuring Entity to complete the Contract in accordance with its terms and conditions up to a total not exceeding the amount of this Bond.

4. The Surety shall not be liable for a greater sum than the specified penalty of this Bond.

5. Any suit under this Bond must be instituted before the expiration of one year from the date of the issuing of the Taking-Over Certificate. No right of action shall accrue on this Bond to or for the use of any person or corporation other than the Procuring Entity named herein or the heirs, executors, administrators, successors, and assigns of the Procuring Entity.

6. In testimony whereof, the Contractor has hereunto set his hand and affixed his seal, and the Surety has caused these presents to be sealed with his corporate seal duly attested by the signature of his legal representative, this day _____ of _____ 20_____.

SIGNED ON_____on behalfof By___in the capacity of In the presence of

SIGNED ON_____on behalf of By__in the capacity of In the presence of

FORM NO. 7 - ADVANCE PAYMENT SECURITY

[Demand Bank Guarantee]

[Guarantor letterhead]

Beneficiary: _____ *[Insert name and Address of* Procuring Entity*]*
Date: _____ *[Insert date of issue]*

ADVANCE PAYMENT GUARANTEE No.: _____ *[Insert guarantee reference number]* **Guarantor:** _____ **[***Insert name and address of place of issue, unless indicated in the letterhead]*

1. We have been informed that _____ (hereinafter called "the Contractor") has entered into Contract No. _____ *dated* _____ with the Beneficiary, for the execution of _____ (hereinafter called "the Contract").

2. Furthermore, we understand that, according to the conditions of the Contract, an advance payment in the sum _____ (*in words*) is to be made against an advance payment guarantee.

3. At the request of the Contractor, we as Guarantor, hereby irrevocably undertake to pay the Beneficiary any sum or sums not exceeding in total an amount of _____ (*in words* _____)[1] upon receipt by us of the Beneficiary's complying demand supported by the Beneficiary's statement, whether in the demand itself or in a separate signed document accompanying or identifying the demand, stating either that the Applicant:
   a) has used the advance payment for purposes other than the costs of mobilization in respect of the Works; or
   b) has failed to repay the advance payment in accordance with the Contract conditions, specifying the amount which the Applicant has failed to repay.

4. A demand under this guarantee may be presented as from the presentation to the Guarantor of a certificate from the Beneficiary's bank stating that the advance payment referred to above has been credited to the Contractor on its account number _____ at _____.

5. The maximum amount of this guarantee shall be progressively reduced by the amount of the advance payment repaid by the Contractor as specified in copies of interim statements or payment certificates which shall be presented to us. This guarantee shall expire, at the latest, upon our receipt of a copy of the interim payment certificate indicating that ninety (90) percent of the Accepted Contract Amount, less provisional sums, has been certified for payment, or on the _____ day of _____, 2 ,[2] whichever is earlier. Consequently, any demand for payment under this guarantee must be received by us at this office on or before that date.

6. The Guarantor agrees to a one-time extension of this guarantee for a period not to exceed *[six months] [one year]*, in response to the Beneficiary's written request for such extension, such request to be presented to the Guarantor before the expiry of the guarantee.

[Name of Authorized Official, signature(s) and seals/stamps]

Note: All italicized text (including footnotes) is for use in preparing this form and shall be deleted from the final product.

[1] *The Guarantor shall insert an amount representing the amount of the advance payment and denominated either in the currency of the advance payment as specified in the Contract.*

[2] *Insert the expected expiration date of the Time for Completion. The Procuring Entity should note that in the event of an extension of the time for completion of the Contract, the Procuring Entity would need to request an extension of this guarantee from the Guarantor. Such request must be in writing and must be made prior to the expiration date established in the guarantee.*

FORM NO. 8 - RETENTION MONEY SECURITY

[Demand Bank Guarantee]

[Guarantor letterhead]

Beneficiary: _____*[Insert name and Address of* Procuring Entity*]*

Date:_____*[Insert date of issue]*

Advance payment guarantee no. *[Insert guarantee reference number]*

Guarantor: [*Insert name and address of place of issue, unless indicated in the letterhead]*

1. We have been informed that_____*[insert name of Contractor, which in the case of a joint venture shall be the name of the joint venture]* (hereinafter called "the Contractor") has entered into Contract No. _____*[insert reference number of the contract]* dated_____with the Beneficiary, for the execution of_____*[insert name of contract and brief description of* Works*]* (hereinafter called "the Contract").

2. Furthermore, we understand that, according to the conditions of the Contract, the Beneficiary retains moneys up to the limit set forth in the Contract ("the Retention Money"), and that when the Taking-Over Certificate has been issued under the Contract and the first half of the Retention Money has been certified for payment, and payment of *[*insert the second half of the Retention Money] is to be made against a Retention Money guarantee.

3. At the request of the Contractor, we, as Guarantor, hereby irrevocably undertake to pay the Beneficiary any sum or sums not exceeding in total an amount of *[insert amount in figures]*_____(*[insert amount in words*_____*])*[1] upon receipt by us of the Beneficiary's complying demand supported by the Beneficiary's statement, whether in the demand itself or in a separate signed document accompanying or identifying the demand, stating that the Contractor is in breach of its obligation(s) under the Contract, without your needing to prove or show grounds for your demand or the sum specified therein.

4. A demand under this guarantee may be presented as from the presentation to the Guarantor of a certificate from the Beneficiary's bank stating that the second half of the Retention Money as referred to above has been credited to the Contractor on its account number_____at_____*[insert name and address of Applicant's bank]*.

5. This guarantee shall expire no later than the …..... Day of ….....……, 2.....…[2], and any demand for payment under it must be received by us at the office indicated above on or before that date.

6. The Guarantor agrees to a one-time extension of this guarantee for a period not to exceed *[six months] [one year]*, in response to the Beneficiary's written request for such extension, such request to be presented to the Guarantor before the expiry of the guarantee.

[Name of Authorized Official, signature(s) and seals/stamps]

Note: All italicized text (including footnotes) is for use in preparing this form and shall be deleted from the final product.

[1] *The Guarantor shall insert an amount representing the amount of the second half of the Retention Money.*

[2]*Insert a date that is twenty-eight days after the expiry of retention period after the actual completion date of the contract. The Procuring Entity should note that in the event of an extension of this date for completion of the Contract, the Procuring Entity would need to request an extension of this guarantee from the Guarantor. Such request must be in writing and must be made prior to the expiration date established in the guarantee.*

FORM NO. 9 BENEFICIAL OWNERSHIP DISCLOSURE FORM

(Amended and issued pursuant to PPRA CIRCULAR No. 02/2022)

INSTRUCTIONS TO TENDERERS: DELETE THIS BOX ONCE YOU HAVE COMPLETED THE FORM

This Beneficial Ownership Disclosure Form ("Form") is to be completed by the successful tenderer pursuant to Regulation 13 (2A) and 13 (6) of the Companies (Beneficial Ownership Information) Regulations, 2020. In case of joint venture, the tenderer must submit a separate Form for each member. The beneficial ownership information to be submitted in this Form shall be current as of the date of its submission.

For the purposes of this Form, a Beneficial Owner of a Tenderer is any natural person who ultimately owns or controls the legal person (tenderer) or arrangements or a natural person on whose behalf a transaction is conducted, and includes those persons who exercise ultimate effective control over a legal person (Tenderer) or arrangement.

Tender Reference No.:_____[*insert identification no*]

Name of the Tender Title/Description:_____*[insert name of the assignment]* to:

_____*[insert complete name of Procuring Entity]*

In response to the requirement in your notification of award dated__*[insert date of notification of award]* to furnish additional information on beneficial ownership:_____*[select one option as applicable and delete the options that are not applicable]*

I) We here by provide the following beneficial ownership information.

Details of beneficial ownership

	Details of all Beneficial Owners		**% of shares a person holds in the company Directly or indirectly**	**% of voting rights a person holds in the company**	**Whether a person directly or indirectly holds a right to appoint or remove a member of the board of directors of the company or an equivalent governing body of the Tenderer** (Yes / No)	**Whether a person directly or indirectly exercises significant influence or control over the Company (tenderer) (Yes / No)**
1.	Full Name		Directly---------- % of shares Indirectly---------- % of shares	Directly…… …….% of voting rights Indirectly---------- % of voting rights	1. Having the right to appoint a majority of the board of the directors or an equivalent governing body of the Tenderer: Yes -----No---- 2. Is this right held directly or indirectly?: Direct…… … Indirect…… …...	1. Exercises significant influence or control over the Company body of the Company (tenderer**)** Yes -----No---- 2. Is this influence or control exercised directly or indirectly? Direct……..
	National identity card number or Passport number					
	Personal Identification Number (where applicable)					
	Nationality					
	Date of birth *[dd/mm/yyyy]*					
	Postal address					
	Residential address					
	Telephone number					

	Details of all Beneficial Owners		**% of shares a person holds in the company Directly or indirectly**	**% of voting rights a person holds in the company**	**Whether a person directly or indirectly holds a right to appoint or remove a member of the board of directors of the company or an equivalent governing body of the Tenderer** (Yes / No)	**Whether a person directly or indirectly exercises significant influence or control over the Company (tenderer) (Yes / No)**
	Email address					Indirect……
	Occupation or profession					
2.	Full Name		Directly---------- % of shares Indirectly---------- % of shares	Directly…… …….% of voting rights Indirectly---------- % of voting rights	1. Having the right to appoint a majority of the board of the directors or an equivalent governing body of the Tenderer: Yes -----No---- 2. Is this right held directly or indirectly?: Direct…… Indirect……	1. Exercises significant influence or control over the Company body of the Company (tenderer**)** Yes -----No---- 2. Is this influence or control exercised directly or indirectly? Direct…….. Indirect……
	National identity card number or Passport number					
	Personal Identification Number (where applicable)					
	Nationality(ies)					
	Date of birth *[dd/mm/yyyy]*					
	Postal address					
	Residential address					
	Telephone number					
	Email address					
	Occupation or profession					
3.						
e.t .c						

II) Am fully aware that beneficial ownership information above shall be reported to the Public Procurement Regulatory Authority together with other details in relation to contract awards and shall be maintained in the Government Portal, published and made publicly available pursuant to Regulation 13(5) of the Companies (Beneficial Ownership Information) Regulations, 2020.(Notwithstanding this paragraph Personally Identifiable Information in line with the Data Protection Act shall not be published or made public). *Note that Personally Identifiable Information (PII) is defined as any information that can be used to distinguish one person from another and can be used to deanonymize previously anonymous data. This information includes National identity card number or Passport number, Personal Identification Number, Date of birth, Residential address, email address and Telephone number.*

III) In determining who meets the threshold of who a beneficial owner is, the Tenderer must consider a natural person who in relation to the company:

(a) holds at least ten percent of the issued shares in the company either directly or indirectly;

(b) exercises at least ten percent of the voting rights in the company either directly or indirectly;

(c) holds a right, directly or indirectly, to appoint or remove a director of the company; or

(d) exercises significant influence or control, directly or indirectly, over the company.

IV) What is stated to herein above is true to the best of my knowledge, information and belief.

Name of the Tenderer: .....[insert complete name of the Tenderer]*_____

*Name of the person duly authorized to sign the Tender on behalf of the Tenderer: ** [insert complete name of person duly authorized to sign the Tender]*

Designation of the person signing the Tender: ..... [insert complete title of the person signing the Tender]

Signature of the person named above: ..... [insert signature of person whose name and capacity are shown above]

Date this ..... [insert date of signing] day of..... [Insert month], [insert year]

Bidder Official Stamp